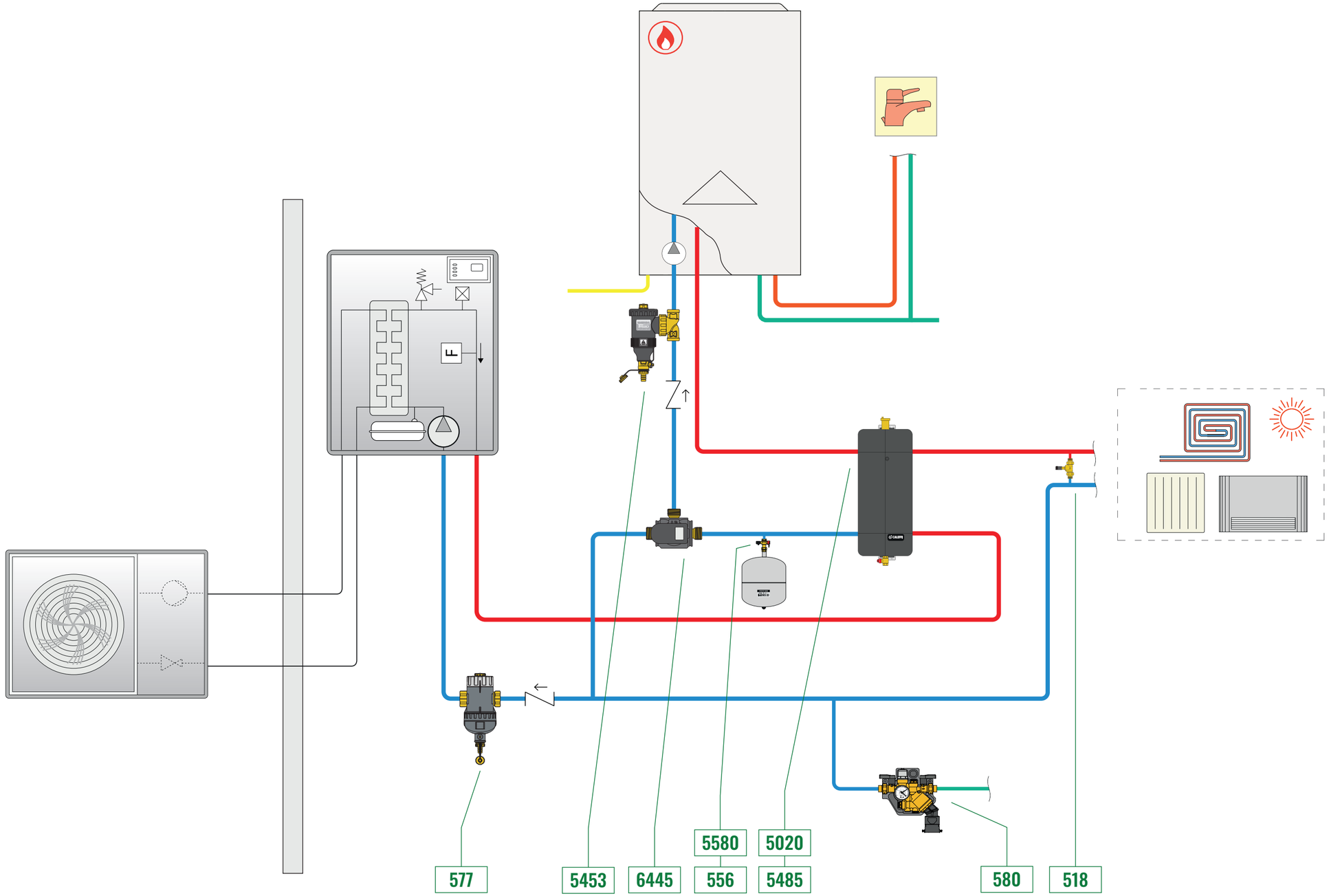

CALEFFI Hydronic Solutions | **4.008** Hybrid system with alternating operation, for heating and instantaneous domestic hot water

Caleffi S.p.A. declines all responsibilities for improper use of this document contents. These schemes do not replace HVAC system planning.