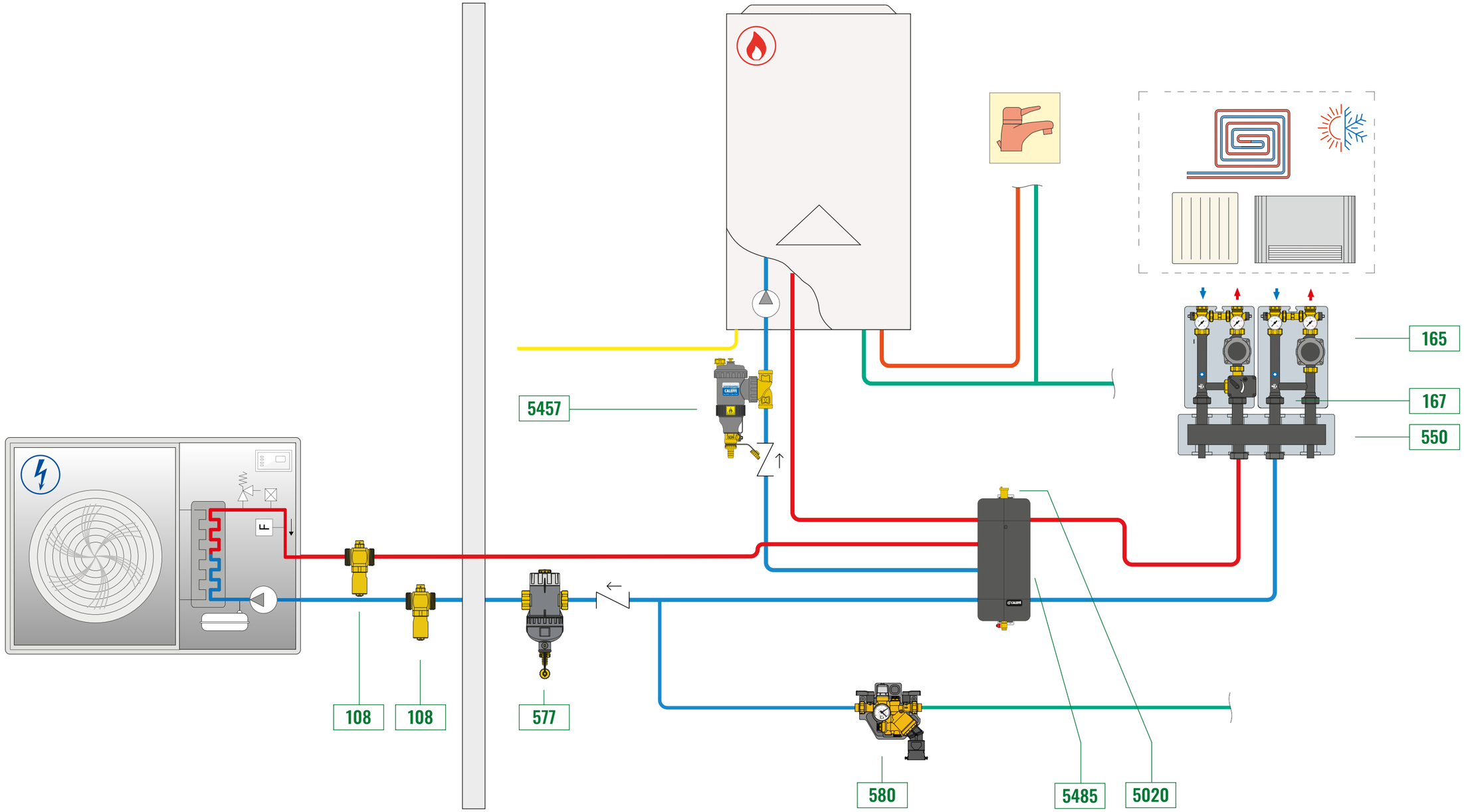

CALEFFI Hydronic Solutions

4.001 Hybrid system with boiler and heat pump, for heating & cooling and instantaneous domestic hot water production

Caleffi S.p.A. declines all responsibilities for improper use of this document contents. These schemes do not replace HVAC system planning.