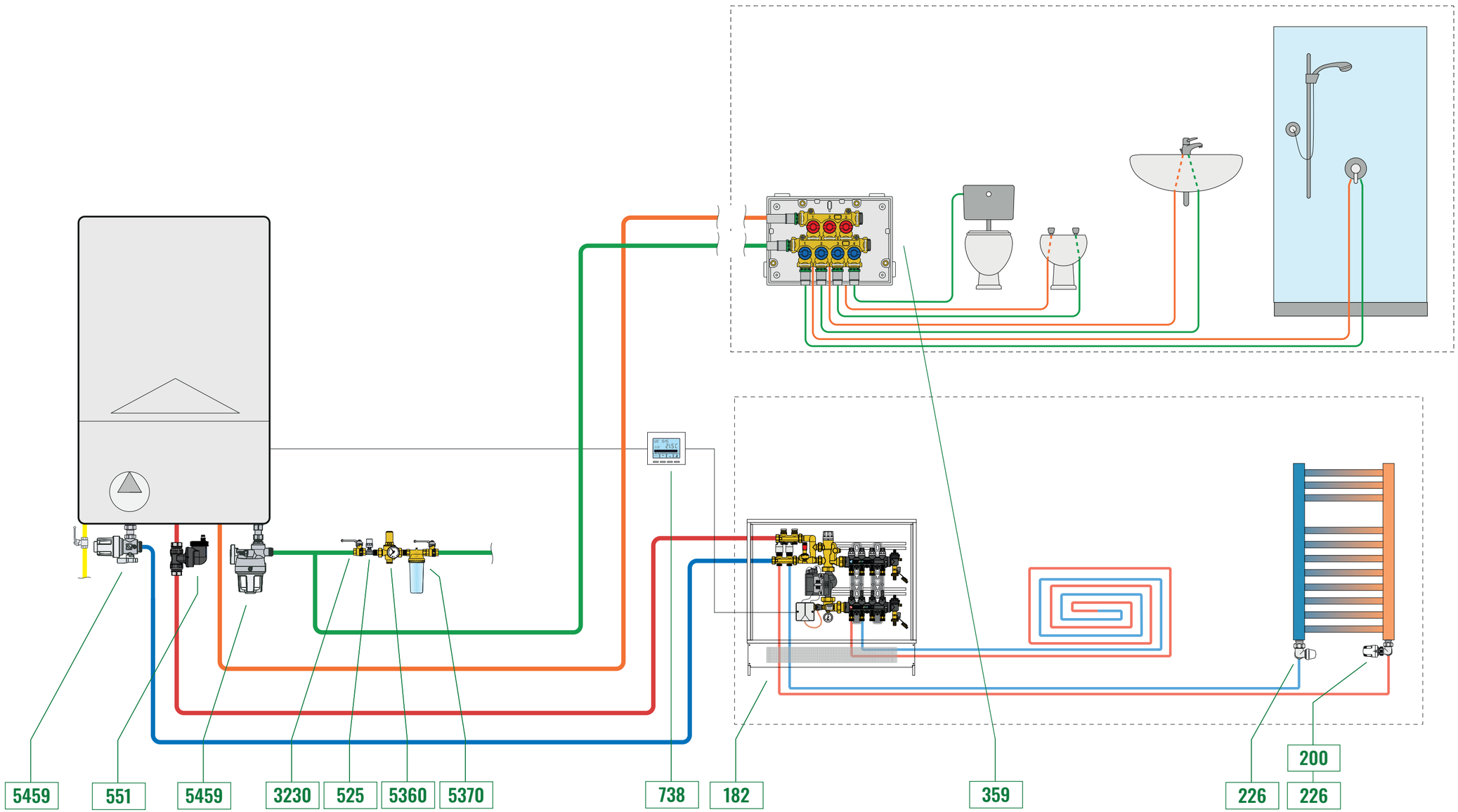


CALEFFI Hydronic Solutions

**1.003** System with wall-mounted boiler and internal instantaneous domestic hot water production

Caleffi S.p.A. declines all responsibilities for improper use of this document contents. These schemes do not replace HVAC system planning.