FLOWING EXPERTISE

2026

CALEFFI

Hydronic Solutions

GENERAL PRODUCT GUIDE

COMPONENTS FOR CENTRAL HEATING SYSTEMS

AIR AND DIRT SEPARATION DEVICES

VALVES AND ACCESSORIES FOR RADIATORS

ZONE AND MOTORISED VALVES, DISTRIBUTION MANIFOLDS, BOXES AND ACCESSORIES

RADIANT PANEL SYSTEM CONTROL

COMPONENTS FOR DOMESTIC WATER SYSTEMS

BACKFLOW PREVENTION DEVICES

BALANCING AND CONTROL DEVICES

FITTINGS

GAS SAFETY

EXPANSION VESSELS, CHRONO-THERMOSTATS, THERMOSTATS

HEAT SYSTEMS

COMPONENTS FOR RENEWABLE ENERGY SYSTEMS

SPARE PARTS - For spare parts, please contact the appropriate department

FITTING COUPLING - PRODUCT DIMENSIONS are available on www.caleffi.com

GENERAL INDEX

SERIES	Page
100	243-244
103 •	240
108	44
110	330-331
112	331
116	193-194
120	237
121	235
125	238
126	235
127	130-234
128	234
130	226
130 ≥ DN 65 •	226
130 •	226-243
132 ≥ DN 65 •	227
140 ≥ DN 65 •	242-244
142	226-242
145	230-232-233
14501. •	232
145 ≥ DN 40 •	233
146 •	233
149	231
1520 •	37-251-278
161 •	37-38-251-278-279-315
165	32-33-36
166	32-34-37-160
167	32-35
182	148-156-157-158-159
200	88-101
201	88
202	88
203	88
204	88
205	95-97-99
209	89-95-97-99-101
210	93
215	92-93
220	85
221	85
222	84
223	84
224	85
225	85-87
226	84-87
227	84
230	86-108
230100 •	108
231	86
232	86
233	86
234	86
237	86
240	320
250	312-313
251	313
2521	322
2522	322-323
2523	322
2527	322
253	312
2540	318-319
2543	318
2544	318
2545	318
2546	318
2547	318

SERIES	Page
2548	318
255	315-316
255 •	315-316
258	320
259 •	316
262	326
2620	321
263	326
264	324
265	324
278 •	314-315
279	314
280	336
281	336
3006	18
3010	110
3011	110
3012	110
3013	110
3015	110
302	17
3037	220
3038	220
3040	207
3041	221
3045	220
3046	220-221
3047	221
3048	221
305	47-17
309	15-206-312
311	11-13
312	11
313	11-13
314	11
315	22
319	205
3230	208-219
324	218
327	16
328	105
332	208-219
333	208-219
334	208-219
335	17
336	17
337	68
338	82-102
3380	102
339	82
340	90
341	90
342	87-91-102
343	87-91
347	139-140
347...S1	154
348	105
349	128-129
350	128
351	129
354	129-200
356	131
357	131
359	196-197-198-199
360	141-200
361	141
362	141
363	141
3640	131

SERIES	Page
3641	131-200
3642	131-137-200
3642...S1	154
381	108
382	108-136
383	102-108-136-137
384	108-136
385	136
386	136-138-152
3871	108
3872	109
391	133-135-152
391...S1	154
392	137
4001	94-96-98-100
4003	94-95-96-97-98-99-100-101
4004	94-95-96-97-98-99-100-101
4005	104
401	82
402	82
411	90
412	90
421	83
422	83
425	83
426	83
431	87-91
432	87-91
437	102-106-107
438	106-107
439	106
446	139
447	106
4490	108
4499	103
4501	105
452	105
455	104
456	104
472 •	89
475	89
501	64
5020	45-63-154
5021	63-64
5022	65
5024	65
5025	65
5026	65
5027	65
503 •	24
504	66
505	67
5054	67
5055	67
507	66
5080	67
5081	67
510	16
5121	13
513	12
514	12
518	49-16-243
519	49-16-36-243
520	180-183
5200	183
5201	183
5202	160

SERIES	Page
521	180
5212	182
5213	181-182
5217	181
5218	181
5219	181
522	180
5230 •	185
5231	184
524 •	185
525	207
5251	207
5261	204-205
5265	205
527 EST	10
528	204
5280	204
5281	204
529	335
530	14
531	15
5320	14
5321	14
5322	14
5327	14
533...H	168
5330	168-175
5330..H	170-175
5331	168
5331..H	170
5332	168
5332..H	170
5334	169
5334..H	170-171
5335..H	171
5335..HS	176
5336	169
5336..H	171
5337	169
5337..H	171
5338	169
5338..H	171
5339	169
534	206
5350	172-175
5350..H	173-175
5351	172
5360	174-175-176
5362	174
5365	174
5366	174
537	175
5370	202
5377	202
538	24-243-244
539	174
539...H	177-184
542	334
543	334
544	335
5450	54
5453	55-56-57
5457	57
5459	54-76
546	74-75
5461	74
5463	58
5464	74
5466	58

GENERAL INDEX

SERIES	Page
547	21
547 ≥ DN 100 •	21
548	26-27
5485	45
5495	27
550	29-30-31-32
551	64-70-71-72
5516	47-71
5520	13
552080 •	13
5521	13
553	18
554	18
5557 •	206-277
556 •	276
5560 •	23
557 •	23-177
558	20-277
5580	20-277-316
559	28-29-31
560	68-109
561	65-66
5620	66
5621	66
5622	66
568 •	277
570	214
570 ≥ DN 50 •	214
5709 •	77
572	212-297
573	19-212
574	19-212-213
575 ≥ DN 150 •	213-214
5750 •	79
5751	213
576 •	176
577	46-25-55-217
577 •	25-217
5771	25-202
578 •	176
579 •	25-60-217
5790	59
580 •	20-78-79-216
583	138
584	138
585	138
586	138
588	254-319
5881	254
592	128-129
598	129
5991	137-200
5993	137-200
5994	138
5995	138
5996	133-138-149-150-154
6000	187-188-189-190
6001	188
6002 •	186
6003	190
6005	186
603	207-312
610 •	250-248
611 •	248
612 •	249
613 •	21-278
618 •	280
620 •	279

SERIES	Page
6205 •	163-280
621 •	22
622 •	22
623 •	22
624 •	22
625 •	21-278
626	23
630	124
632	124
633	124
635	124
636	246-247
6370 •	37-250
638	49-121-122-249
6400	48
641	125
642	125
643	125
6440	48-119
6442	116
6443	117-119-321
6443...3BY	118
6444	118
6445	48
6446	116
6447	117
6450	120
6452	120
6453	120
6459	120
6480	183
650	130
6509	205
6561	123-162
6562	163
6563	162
6564	163
6565 •	232-291
6566 •	232-291
657	137
658	133-143-149-150-154
659	142-164
661	159-164
662	132-133-149-152
6620	133
6621	133
663	134-135
6630	135
6631	135
664	50-132-150-152
665	151
666...S1	153
667...S1	153
668...S1	153-154
669	137
671	148
675	148-152-159
676	123
677	123
678	123
679	106-107-139-140
679 •	106
680	139-140-152
681	102-106-107
687 •	23
688 •	24-137
689 •	23
690 •	24

SERIES	Page
691 •	24
692 •	23
693 •	23
694	24
7000	289
7002	288-291
70026	290
70028	290
70029	290
7004	291
7008	287
738	280
739	280
750	286
75025	319
7504G	306
7504K	306
7507	283
7507G	306
7507K	306
7508	284-288-307
755	307
7550	189-307
7558	284-286-288-307
765	293
766	293
767	293
789	297-301-302
7942	285-301-304-305
7945	301-304-305
7949	304-305
797	292
837 •	269-270-271
838 •	270-271
839 •	272-271
841 •	273
842 •	273
8460 •	273
8461 •	273
847 •	268
848 •	268
850 •	268
852 •	269
8540 •	272-271
8541 •	269-271
855 •	274
8561 •	274
8562 •	274
8563 •	274
8565 •	274
860	260
860 ≥ DN 75 •	260
861	260
861 ≥ DN 75 •	260
862	261
863	261
863 ≥ DN 75 •	261
864	261
865	261
866	262
867	262
868	262
869	262
870	262
871	262-331
875	260
876	260
877	265
878	265

SERIES	Page
879	265
886	265
887	265
888 •	261
890	264
891	264
893	264
894	264
900	256
903	256
904	256
9050	256
9057	257
9058	257
9060	257
9067	257
9068	258
910	258
913	258
914	258
930	255-258
940	255
941	255
942	255
943	255
944	255
945	255
946	255
947	255
948	255
960	263
961	263
962	263
963	263
964	263
966	263
967	264
968	264
970	264
975	263
980	264
986	264
KIT5459	54-76
SATK10 •	301
SATK15 •	302
SATK16 •	302
SATK20 •	298-299
SATK22 •	294-295
SATK30 •	300
SATK32 •	296
SATK40 •	300
SATK50 •	303-304
SATK60 •	305

THE CALEFFI GREEN



OUR SUSTAINABLE COMMITMENT

The Caleffi Green means facing a future capable of sustaining the needs of today's and tomorrow's people in terms of climate, sustainable comfort, energy saving and the protection of water and people's health.

WASTE RECOVERY AND MORE

85 % RAW MATERIALS FROM ITALY

98,7 % RAW MATERIALS FROM EUROPE

100 % EXPANDED POLYURETHANE ELIMINATED FROM PRODUCT PACKAGING

+11 % USE OF LOW LEAD BRASS IN 5 YEARS

-60 % POLYETHYLENE FOR OUTGOING PACKAGING

98,5 % PLASTIC SCRAP RECOVERED

100 % BRASS SCRAP RECOVERED

WATCH THE VIDEO

SAVE RESOURCES PROTECT OUR PLANET

Our products contribute to

GREEN REVOLUTION

deliver the right climate for life.

OUR SOLUTIONS

SUPPORTING ENERGY TRANSITION



HEAT PUMP COMPONENTS

BETTER WATER MANAGEMENT



WATER TREATMENT DEVICES

SMART DESIGN



CIRCUIT BALANCING DEVICES

WE CARE FOR WATER AND PEOPLE'S HEALTH



DOMESTIC WATER DEVICES

SUSTAINABLE COMFORT

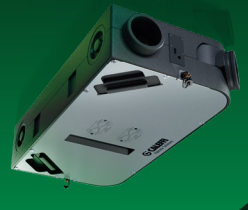

HRV AND HVAC SYSTEM COMPONENTS

FIND OUT MORE

bim.caleffi.com

100% BIM

WE SHARE OUR EXPERTISE



+10000 professionals registered

+10 years expertise

+4000 codes

Explore bim.caleffi.com, the portal for MEP design professionals. Download virtual models of our products with constantly updated essential data and parameters. Find families (RFA), projects (RVT), and templates for the MEP sector, as well as models in IFC and BOL formats. Join over 6000 professionals who have already chosen our smart design solutions.

PRODUCTION PLANTS

MADE IN ITALY

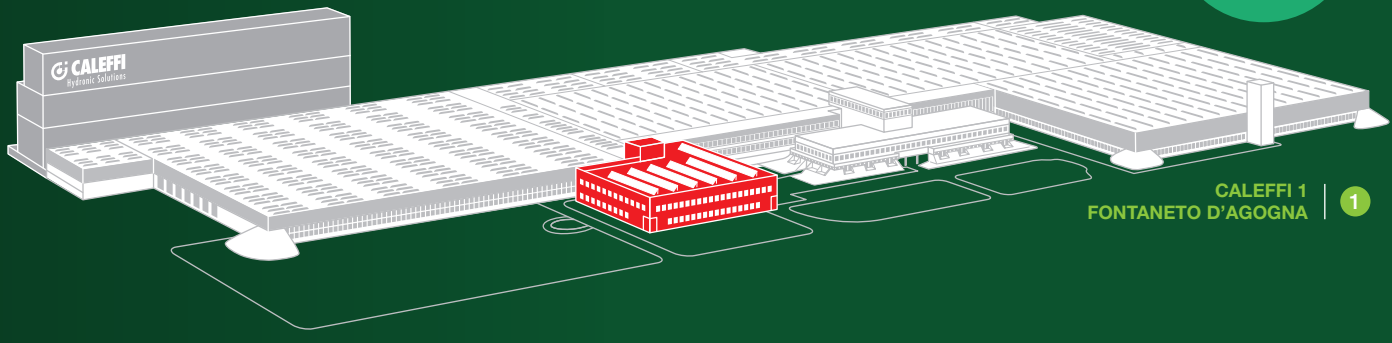

CALEFFI 1
FONTANETO D'AGOGNA | 1



CALEFFI 2
FONTANETO D'AGOGNA | 2

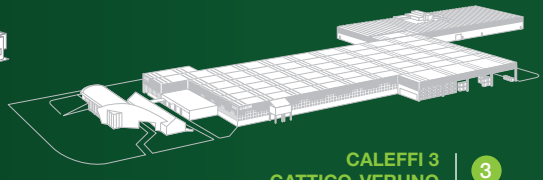

CALEFFI 3
GATTICO-VERUNO | 3

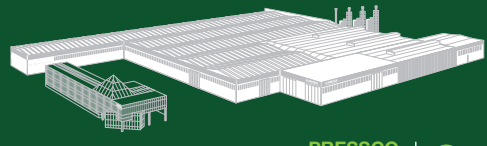

PRESSCO
INVORIO | 4

Caleffi Hydronic Solutions has been redesigning comfort with its HVAC and plumbing solutions for over 60 years.
More than **1000 people** are employed among the Headquarters, the production plants (all set up in Italy) and the foreign branches. Over 90 countries are reached by the brand and new investments are still to come in the near future.

1. **Caleffi S.p.A.**
   Headquarters - Plant 1
   Fontaneto d'Agogna - ITALY
2. **Caleffi S.p.A.**
   Plant 2
   Fontaneto d'Agogna - ITALY
3. **Caleffi S.p.A.**
   Plant 3
   Gattico-Veruno - ITALY
4. **PRESSCO S.p.A.**
   Brass moulding and machining
   Invorio - ITALY

WHERE WE ARE WORLDWIDE

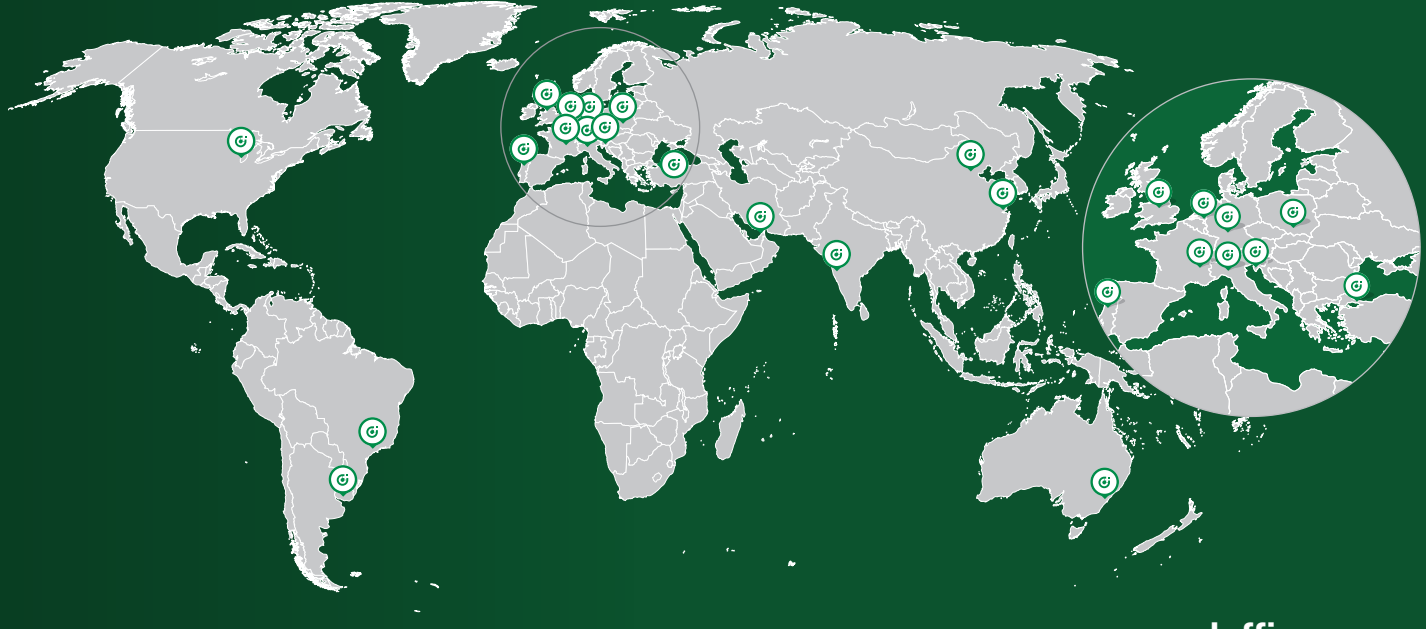

www.caleffi.com

APPROVAL & CERTIFICATIONS



bsi.

Certificate of Registration

QUALITY MANAGEMENT SYSTEM - ISO 9001:2015

Si certifica che: Caleffi S.p.A.
S.R. 229 N. 25
Fontaneto d'Agogna (NO)
28010
Italy

Detiene il Certificato n° **FM 21654**

e applica un Sistema di Gestione per la Qualità in conformità ai requisiti ISO 9001:2015 con riferimento al seguente scopo:

Progettazione, fabbricazione e commercializzazione di componenti, per applicazioni civili e industriali, relativi a impianti di riscaldamento/raffrescamento, idrico-sanitari, solari, geotermici, biomassa, trattamento acqua, gas, sistemi di ventilazione e trattamento aria.

Le attività rientrano nel Settore IAF 17.

In nome e per conto di BSI: David Fardel, Country Manager, Assurance - Continental Europe

Certificazione originale: 1992-09-28
Ultima emissione: 2024-04-22

Data di validità: 2024-05-08
Scadenza: 2027-05-07

Pagina: 1 di 2

...making excellence a habit.™



ICIM

CISQ is a member of IQNET

CERTIFICATO N. / *CERTIFICATE No.* ICIM-14001-000512-04

SI CERTIFICA CHE IL SISTEMA DI GESTIONE AMBIENTALE DI / *WE HEREBY CERTIFY THAT THE ENVIRONMENTAL MANAGEMENT SYSTEM OPERATED BY*

CALEFFI S.P.A.

SEDE CENTRALE / *HEADQUARTER*

Strada Regionale 229, 25 28010 Fontaneto d'Agogna NO IT - Italia

PER LE UNITÀ OPERATIVE VEDERE L'ALLEGATO / *FOR OPERATIVE UNITS SEE ATTACHMENT*

È CONFORME ALLA NORMA / *IS IN COMPLIANCE WITH THE STANDARD*

UNI EN ISO 14001:2015

Sistema di Gestione Ambientale / *Environmental Management System*

PER LE SEGUENTI ATTIVITÀ / *FOR THE FOLLOWING ACTIVITIES*

EA: 14 - 18

Progettazione e fabbricazione di componenti idrotermici, sia per applicazioni in campo civile che industriale, realizzati mediante lavorazioni meccaniche (transfer e plurimandrino), stampaggio plastico a iniezione e assemblaggio.

Design and manufacture of hydrothermal components for civil and industrial applications, by mechanical processes (transference and multi-spindle), plastic injection molding and assembly.

Certificazione rilasciata in conformità al Regolamento Tecnico ACCREDIA RT-09
Certificate issued in accordance with the Technical Regulations ACCREDIA RT-09

Il presente certificato è soggetto al rispetto del documento ICIM "Regolamento per la certificazione dei sistemi di gestione" e al relativo Schema specifico.
The use and the validity of this certificate shall satisfy the requirements of the ICIM document "Rules for the certification of company management systems" and specific Scheme.

Per informazioni puntuali e aggiornate circa eventuali variazioni intervenute nello stato della certificazione di cui al presente certificato, si prega di contattare il n° telefonico +39 02 733241 o indirizzo e-mail info@icim.it.
For timely and updated information about any changes in the certification status referred to in this certificate, please contact the number +39 02 733241 or email address info@icim.it

DATA EMISSIONE / *FIRST ISSUE*	EMISSIONE CORRENTE / *CURRENT ISSUE*	DATA DI SCADENZA / *EXPIRING DATE*
05/06/2012	05/06/2024	04/06/2027

Vincenzo Delescave
Rappresentante Direzione / *Management Representative*
ICIM S.p.A.
Piazza Don Enrico Mapelli, 75 – 20090 Sesto San Giovanni (MI)
www.icim.it

ACCREDIA
RQ N° 0004

CISQ
www.cisq.com



ICIM

CISQ is a member of IQNET

CERTIFICATO N. / *CERTIFICATE No.* ICIM-45001-051184-00

SI CERTIFICA CHE IL SISTEMA DI GESTIONE DELLA SALUTE E SICUREZZA NEI LUOGHI DI LAVORO DI / *WE HEREBY CERTIFY THAT THE OCCUPATIONAL HEALTH AND SAFETY MANAGEMENT SYSTEM OPERATED BY*

CALEFFI S.P.A.

SEDE CENTRALE / *HEADQUARTER*

Strada Regionale 229, 25 28010 Fontaneto d'Agogna NO IT - Italia

PER LE UNITÀ OPERATIVE VEDERE L'ALLEGATO / *FOR OPERATIVE UNITS SEE ATTACHMENT*

È CONFORME ALLA NORMA / *IS IN COMPLIANCE WITH THE STANDARD*

UNI EN ISO 45001:2023

Sistema di Gestione della Salute e Sicurezza nei Luoghi di Lavoro / *Occupational Health and Safety Management System*

PER LE SEGUENTI ATTIVITÀ / *FOR THE FOLLOWING ACTIVITIES*

IAF: 18 - 14

Progettazione e fabbricazione di componenti idrotermici, sia per applicazioni in campo civile che industriale, realizzati mediante lavorazioni meccaniche (transfer e plurimandrino), stampaggio plastico a iniezione e assemblaggio.

Design and Manufacture Of Hydrothermal Components for Civil And Industrial Applications, by Mechanical Processes (Transference And Multi-Spindle), Plastic Injection Molding And Assembly

Il presente certificato è soggetto al rispetto del documento ICIM "Regolamento per la certificazione dei sistemi di gestione" e al relativo Schema specifico.
The use and the validity of this certificate shall satisfy the requirements of the ICIM document "Rules for the certification of company management systems" and specific Scheme.

Per informazioni puntuali e aggiornate circa eventuali variazioni intervenute nello stato della certificazione di cui al presente certificato, si prega di contattare il n° telefonico +39 02 733241 o indirizzo e-mail info@icim.it.
For timely and updated information about any changes in the certification status referred to in this certificate, please contact the number +39 02 733241 or email address info@icim.it

DATA EMISSIONE / *FIRST ISSUE*	EMISSIONE CORRENTE / *CURRENT ISSUE*	DATA DI SCADENZA / *EXPIRING DATE*
05/12/2024	05/12/2024	04/12/2027

Vincenzo Delescave
Rappresentante Direzione / *Management Representative*
ICIM S.p.A.
Piazza Don Enrico Mapelli, 75 – 20090 Sesto San Giovanni (MI)
www.icim.it

ACCREDIA
RQ N° 0004

CISQ
www.cisq.com



IQNet

THE INTERNATIONAL CERTIFICATION NETWORK

CERTIFICATE

CISQ/ICIM SPA has issued an IQNet recognized certificate that the organization:

CALEFFI S.p.A.

Head Office and Operative Unit
Strada Regionale 229, 25 - I-28010 Fontaneto d'Agogna (NO)
Operative Unit
Via Maggiate, 15 - I-28013 Gattico (NO)

has implemented and maintains a

Environmental Management System

for the following scope:

Design and manufacture of hydrothermal components for civil and industrial applications, by mechanical processes (transference and multi-spindle), plastic injection molding and assembly.

which fulfils the requirements of the following standard:

ISO 14001:2015

Issued on:	**2021-06-05**
First Issued on:	**2012-06-05**
Expires on:	**2024-06-04**

This attestation is directly linked to the IQNet Partner's original certificate and shall not be used as a stand-alone document.

Registration Number: IT-83000

Alex Stoichitoiu
President of IQNET

Ing. Mario Romersi
President of CISQ

IQNet Partners*:
AENOR *Spain* AFNOR Certification *France* APCER *Portugal* CCC *Cyprus* CISQ *Italy*
CQC *China* CQM *China* CQS *Czech Republic* Cro Cert *Croatia* DQS Holding GmbH *Germany* EAGLE Certification Group *USA*
FCAV *Brazil* FONDONORMA *Venezuela* ICONTEC *Colombia* Inspecta Sertifiointi Oy *Finland* INTECO *Costa Rica*
IRAM *Argentina* IQA *Japan* KFQ *Korea* MIRTEC *Greece* MSZT *Hungary* Nemko AS *Norway* NSAI *Ireland*
NYCE-SIGE *México* PCBC *Poland* Quality Austria *Austria* RR *Russia* SII *Israel* SIQ *Slovenia*
SIRIM QAS International *Malaysia* SQS *Switzerland* SRAC *Romania* TEST St Petersburg *Russia* TSE *Turkey* YUQS *Serbia*

* The list of IQNet partners is valid at the time of issue of this certificate. Updated information is available under www.iqnet-certification.com





COMPONENTS FOR CENTRAL HEATING SYSTEMS

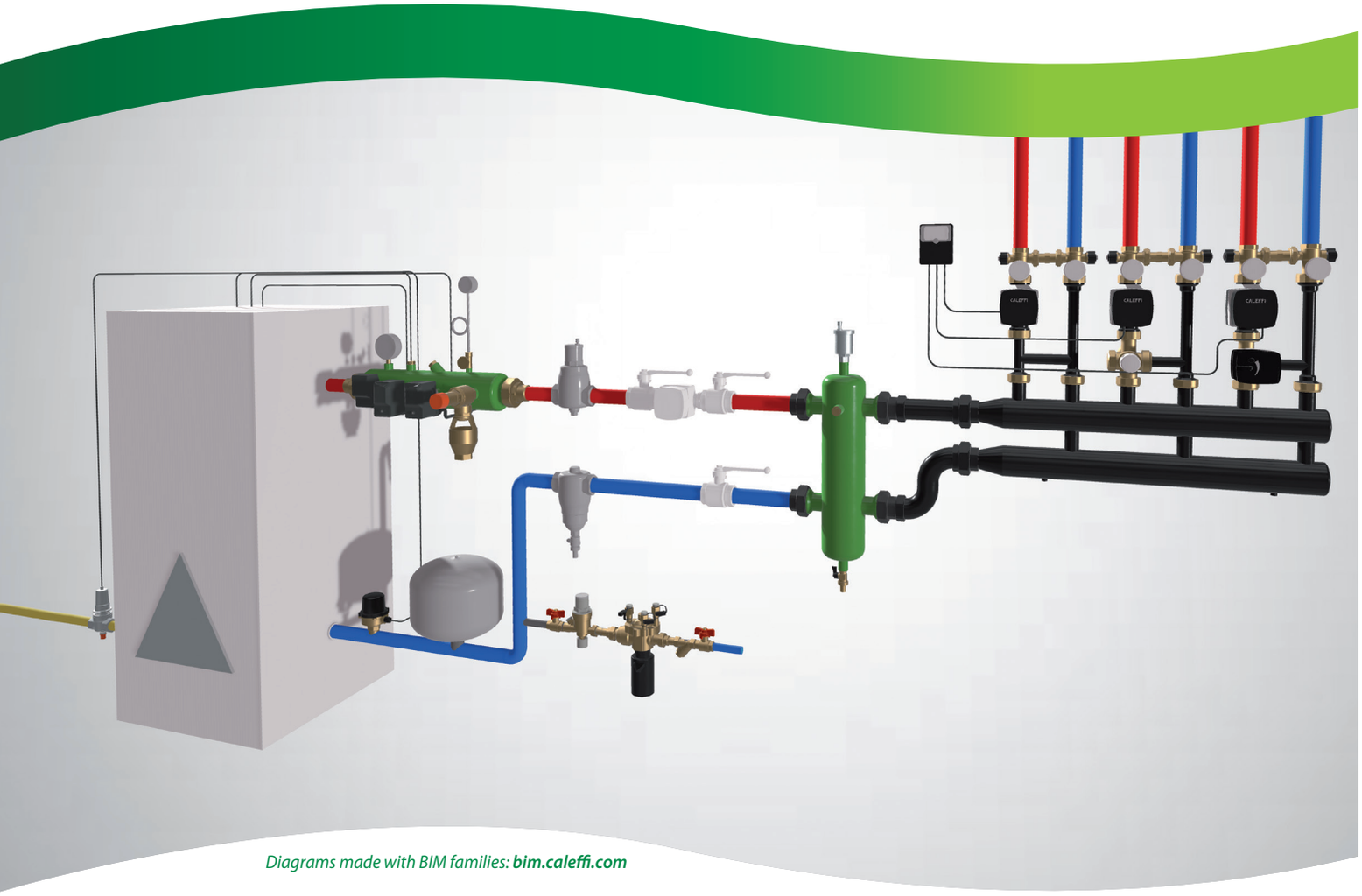

Diagrams made with BIM families: ***bim.caleffi.com***

Safety relief valves
Safety relief valves for domestic water systems
Differential pressure control devices
Check valves
Instrument holders
Filling units
Accessories for expansion vessels
Control devices and accessories
Strainers
Hydraulic separators
Hydraulic separators-manifolds
Manifolds for central heating system
Supply units

SAFETY RELIEF VALVES

Standard safety relief valves



527 EST

Safety relief valve.
Settings: 2,25 - 2,5 - 3 - 3,5 - 4 - 4,5 - 5 - 5,4 - 6 bar.
Discharge overpressure: 10 %.
Closing differential: 20 %.

Medium temperature range: 5–110 °C
Nominal pressure: PN 10

CE 2797

Code	Connection	Drain connection	Pressure setting (bar)		
527422 EST	1/2″F	3/4″F	2,25	1	25
527425 EST	1/2″F	3/4″F	2,5	1	25
527427 EST	1/2″F	3/4″F	2,7	1	25
527430 EST	1/2″F	3/4″F	3	1	25
527435 EST	1/2″F	3/4″F	3,5	1	25
527440 EST	1/2″F	3/4″F	4	1	25
527445 EST	1/2″F	3/4″F	4,5	1	25
527450 EST	1/2″F	3/4″F	5	1	25
527454 EST	1/2″F	3/4″F	5,4	1	25
527460 EST	1/2″F	3/4″F	6	1	25
527522 EST	3/4″F	1″F	2,25	1	25
527525 EST	3/4″F	1″F	2,5	1	25
527527 EST	3/4″F	1″F	2,7	1	25
527530 EST	3/4″F	1″F	3	1	25
527535 EST	3/4″F	1″F	3,5	1	25
527540 EST	3/4″F	1″F	4	1	25
527545 EST	3/4″F	1″F	4,5	1	25
527550 EST	3/4″F	1″F	5	1	25
527554 EST	3/4″F	1″F	5,4	1	25
527560 EST	3/4″F	1″F	6	1	25
527622 EST	1″F	1 1/4″F	2,25	1	10
527625 EST	1″F	1 1/4″F	2,5	1	10
527627 EST	1″F	1 1/4″F	2,7	1	10
527630 EST	1″F	1 1/4″F	3	1	10
527635 EST	1″F	1 1/4″F	3,5	1	10
527640 EST	1″F	1 1/4″F	4	1	10
527645 EST	1″F	1 1/4″F	4,5	1	10
527650 EST	1″F	1 1/4″F	5	1	10
527654 EST	1″F	1 1/4″F	5,4	1	10
527660 EST	1″F	1 1/4″F	6	1	10
527722 EST	1 1/4″F	1 1/2″F	2,25	1	10
527725 EST	1 1/4″F	1 1/2″F	2,5	1	10
527727 EST	1 1/4″F	1 1/2″F	2,7	1	10
527730 EST	1 1/4″F	1 1/2″F	3	1	10
527735 EST	1 1/4″F	1 1/2″F	3,5	1	10
527740 EST	1 1/4″F	1 1/2″F	4	1	10
527745 EST	1 1/4″F	1 1/2″F	4,5	1	10
527750 EST	1 1/4″F	1 1/2″F	5	1	10
527754 EST	1 1/4″F	1 1/2″F	5,4	1	10
527760 EST	1 1/4″F	1 1/2″F	6	1	10



527 EST

Safety relief valve.
Special settings.
Settings: 1 - 1,5 - 2 - 7 - 8 bar.
Discharge overpressure: 10 %.
Closing differential: 20 %.

Medium temperature range: 5–110 °C
Nominal pressure: PN 10

CE 2797

Code	Connection	Drain connection	Pressure setting (bar)		
527410 EST	1/2″F	3/4″F	1	1	25
527415 EST	1/2″F	3/4″F	1,5	1	25
527420 EST	1/2″F	3/4″F	2	1	25
527470 EST	1/2″F	3/4″F	7	1	25
527480 EST	1/2″F	3/4″F	8	1	25
527510 EST	3/4″F	1″F	1	1	25
527515 EST	3/4″F	1″F	1,5	1	25
527520 EST	3/4″F	1″F	2	1	25
527570 EST	3/4″F	1″F	7	1	25
527580 EST	3/4″F	1″F	8	1	25
527610 EST	1″F	1 1/4″F	1	1	10
527615 EST	1″F	1 1/4″F	1,5	1	10
527620 EST	1″F	1 1/4″F	2	1	10
527670 EST	1″F	1 1/4″F	7	1	10
527680 EST	1″F	1 1/4″F	8	1	10
527710 EST	1 1/4″F	1 1/2″F	1	1	10
527715 EST	1 1/4″F	1 1/2″F	1,5	1	10
527720 EST	1 1/4″F	1 1/2″F	2	1	10
527770 EST	1 1/4″F	1 1/2″F	7	1	10
527780 EST	1 1/4″F	1 1/2″F	8	1	10



311

Safety relief valve. Female connections.
Note (*): with PZH certification
Discharge overpressure: 20 %.
Closing differential: 20 %.

Medium temperature range: 5–110 °C
Nominal pressure: PN 10

Code	Connection	Drain connection	Notes	Pressure setting (bar)		
311415	1/2″F	1/2″F	-	1,5	1	50
311425	1/2″F	1/2″F	-	2,5	1	50
311430	1/2″F	1/2″F	-	3	1	50
311435	1/2″F	1/2″F	-	3,5	1	50
311440	1/2″F	1/2″F	-	4	1	50
311450	1/2″F	1/2″F	(*)	5	1	50
311460	1/2″F	1/2″F	(*)	6	1	50
311470	1/2″F	1/2″F	(*)	7	1	50
311480	1/2″F	1/2″F	(*)	8	1	50
311520	3/4″F	3/4″F	-	2	1	50
311525	3/4″F	3/4″F	-	2,5	1	50
311530	3/4″F	3/4″F	-	3	1	50
311535	3/4″F	3/4″F	-	3,5	1	50
311540	3/4″F	3/4″F	-	4	1	50
311550	3/4″F	3/4″F	(*)	5	1	50
311555	3/4″F	3/4″F	-	5,5	1	50
311560	3/4″F	3/4″F	(*)	6	1	50
311570	3/4″F	3/4″F	(*)	7	1	50
311580	3/4″F	3/4″F	(*)	8	1	50
311590	3/4″F	3/4″F	(*)	9	1	50



312

Safety relief valve, male - female connections.
Note (*): with PZH certification
Discharge overpressure: 20 %.
Closing differential: 20 %.

Medium temperature range: 5–110 °C
Nominal pressure: PN 10

Code	Connection	Drain connection	Notes	Pressure setting (bar)		
312428	1/2″M	1/2″F	-	1,8	1	50
312425	1/2″M	1/2″F	-	2,5	1	50
312430	1/2″M	1/2″F	-	3	1	50
312435	1/2″M	1/2″F	-	3,5	1	50
312440	1/2″M	1/2″F	-	4	1	50
312450	1/2″M	1/2″F	(*)	5	1	50
312460	1/2″M	1/2″F	(*)	6	1	50
312470	1/2″M	1/2″F	(*)	7	1	50
312480	1/2″M	1/2″F	(*)	8	1	50



313

Safety relief valve, female connections. With pressure gauge.
Note (*): Only with pressure gauge connection.
Note (**): with PZH certification
Discharge overpressure: 20 %.
Closing differential: 20 %.

Medium temperature range: 5–90 °C
Nominal pressure: PN 10

Code	Connection	Drain connection	Notes	Pressure setting (bar)		
313425	1/2″F	1/2″F	-	2,5	1	50
313430	1/2″F	1/2″F	-	3	1	50
313432	1/2″F	1/2″F	(*)	3	1	50
313460	1/2″F	1/2″F	(**)	6	1	50
313470	1/2″F	1/2″F	(**)	7	1	50
313480	1/2″F	1/2″F	(**)	8	1	50
313525	3/4″F	3/4″F	-	2,5	1	50
313530	3/4″F	3/4″F	-	3	1	50
313532	3/4″F	3/4″F	(*)	3	1	50
313560	3/4″F	3/4″F	(**)	6	1	50
313570	3/4″F	3/4″F	(**)	7	1	50
313580	3/4″F	3/4″F	(**)	8	1	50



314

Safety relief valve, male - female connections. With pressure gauge.
Note (*): with PZH certification
Discharge overpressure: 20 %.
Closing differential: 20 %.

Medium temperature range: 5–90 °C
Nominal pressure: PN 10

Code	Connection	Drain connection	Pressure setting (bar)	Notes		
314425	1/2″M	1/2″F	2,5	-	1	50
314430	1/2″M	1/2″F	3	-	1	50
314460	1/2″M	1/2″F	6	(*)	1	50
314470	1/2″M	1/2″F	7	(*)	1	50
314480	1/2″M	1/2″F	8	(*)	1	50



513

Safety relief valve, female connections.
Discharge overpressure: 20 %.
Closing differential: 20 %.

Medium temperature range: 5–110 °C
Nominal pressure: PN 10

CE 2797

Code	Connection	Drain connection	Pressure setting (bar)		
513415	1/2″F	1/2″F	1,5	1	50
513420	1/2″F	1/2″F	2	1	50
513425	1/2″F	1/2″F	2,5	1	50
513430	1/2″F	1/2″F	3	1	50
513435	1/2″F	1/2″F	3,5	1	50
513460	1/2″F	1/2″F	6	1	50
513470	1/2″F	1/2″F	7	1	50
513480	1/2″F	1/2″F	8	1	50



513

Safety relief valve, female connections.
Discharge overpressure: 20 %.
Closing differential: 20 %.

Medium temperature range: 5–110 °C
Nominal pressure: PN 10

CE 2797

Code	Connection	Drain connection	Pressure setting (bar)		
513615	1″F	1 1/4″F	1,5	1	25
513620	1″F	1 1/4″F	2	1	25
513625	1″F	1 1/4″F	2,5	1	25
513630	1″F	1 1/4″F	3	1	25
513635	1″F	1 1/4″F	3,5	1	25
513640	1″F	1 1/4″F	4	1	25
513655	1″F	1 1/4″F	5,5	1	25
513660	1″F	1 1/4″F	6	1	25
513670	1″F	1 1/4″F	7	1	25
513680	1″F	1 1/4″F	8	1	25
513725	1 1/4″F	1 1/2″F	2,5	1	10
513730	1 1/4″F	1 1/2″F	3	1	10
513735	1 1/4″F	1 1/2″F	3,5	1	10
513760	1 1/4″F	1 1/2″F	6	1	10
513770	1 1/4″F	1 1/2″F	7	1	10
513780	1 1/4″F	1 1/2″F	8	1	10



514

Safety relief valve, male - female connections.
Discharge overpressure: 20 %.
Closing differential: 20 %.

Medium temperature range: 5–110 °C
Nominal pressure: PN 10

CE 2797

Code	Connection	Drain connection	Pressure setting (bar)		
514420	1/2″M	1/2″F	2	1	50
514425	1/2″M	1/2″F	2,5	1	50
514430	1/2″M	1/2″F	3	1	50
514435	1/2″M	1/2″F	3,5	1	50
514440	1/2″M	1/2″F	4	1	50
514450	1/2″M	1/2″F	5	1	50
514460	1/2″M	1/2″F	6	1	50
514470	1/2″M	1/2″F	7	1	50
514480	1/2″M	1/2″F	8	1	50

Accessories for safety relief valves



5521 NEW

Elbow tundish.

Code	Connection	Drain connection	Notes		
552140	1/2″ M	Ø 40-60	technopolymer tundish	1	-
552150	3/4″ M	Ø 40-60	technopolymer tundish	1	-
552160	1″ M	Ø 50	brass tundish	1	-
552170	1 1/4″ M	Ø 50	brass tundish	1	-



5520 NEW

Straight tundish.

Code	Connection	Drain connection	Notes		
552050	3/4″ M	Ø 40-60	technopolymer tundish	1	10
552070	1 1/4″ M	Ø 50	brass tundish	1	6



5520

Pre-formed special tundish.

Code	Connection		
552080	1 1/2″ F	1	-

NF certified safety relief valves



311

Safety relief valve.
Discharge overpressure 20 %.
Closing differential: 15 %.
Certified to NF P 52-001 standard - Class 2.

Medium temperature range: 5–110 °C
Maximum discharge rating: 100 kW
Nominal pressure: PN 10

Code	Connection	Drain connection	Pressure setting (bar)		
311431	1/2″ F	1/2″ F	3	1	50



313

Safety relief valve.
Discharge overpressure: 20 %.
Closing differential: 15 %.
Certified to NF P 52-001 standard - Class 2.

Medium temperature range: 5–110 °C
Maximum discharge rating: 100 kW
Nominal pressure: PN 10

Code	Connection	Drain connection	Pressure setting (bar)		
313433	1/2″ F	1/2″ F	3	50	-



5121

Safety relief valve.
Discharge overpressure 20 %.
Closing differential 15 %.
Closing differential 15%.
Certified to NF P 52-001 - Class 2 standard.

Medium temperature range: 5–110 °C
Maximum discharge rating: 110 kW

Code	Connection	Pressure setting (bar)		
512131	1/2″ F	3	1	

TUV certified safety relief valves



5320

Safety relief valve.
Discharge overpressure: 20 %.
Closing differential: 20 %.

Medium temperature range: 5–120 °C
Maximum discharge rating: 50 kW
Maximum percentage of glycol: 50 %
Medium: water, glycol solutions

CE 2797 TÜVRheinland ZERTIFIZIERT www.tuv.com ID 0000014051

Code	Connection	Drain connection	Pressure setting (bar)		
532042	1/2″F	3/4″F	2,5	1	50
532043	1/2″F	3/4″F	3	1	50



5321

Safety relief valve.
With pressure gauge.
Discharge overpressure: 20 %.
Closing differential: 20 %.

Medium temperature range: 5–120 °C
Maximum discharge rating: 50 kW
Maximum percentage of glycol: 50 %
Medium: water, glycol solutions

CE 2797 TÜVRheinland ZERTIFIZIERT www.tuv.com ID 0000014051

Code	Connection	Drain connection	Pressure setting (bar)		
532142	1/2″F	3/4″F	2,5	1	50
532143	1/2″F	3/4″F	3	1	50



5322

Safety relief valve.
With pressure gauge connection..
Discharge overpressure: 20 %.
Closing differential: 20 %.

Medium temperature range: 5–90 °C
Maximum discharge rating: 50 kW
Maximum percentage of glycol: 50 %
Medium: water, glycol solutions

CE 2797 TÜVRheinland ZERTIFIZIERT www.tuv.com ID 0000014051

Code	Connection	Drain connection	Pressure setting (bar)		
532242	1/2″F	3/4″F	2,5	1	50
532243	1/2″F	3/4″F	3	50	



5327

Safety relief valve.
Discharge overpressure: 20 %.
Closing differential: 20 %.

Medium temperature range: 5–120 °C
Maximum discharge rating: 50 kW
Maximum percentage of glycol: 50 %
Medium: water, glycol solutions

CE 2797 TÜVRheinland ZERTIFIZIERT www.tuv.com ID 0000014051

Code	Connection	Drain connection	Pressure setting (bar)		
532742	1/2″M	3/4″F	2,5	1	
532743	1/2″M	3/4″F	3	1	



530

Safety relief valve.
Discharge overpressure: 20 %.
Closing differential: 20 %.

Medium temperature range: 5–120 °C
Maximum percentage of glycol: 50 %
Medium: water, glycol solutions

CE 2797 TÜVRheinland ZERTIFIZIERT www.tuv.com ID 0000013864

Code	Connection	Drain connection	Pressure setting (bar)		
530525	Rp 3/4″F	Rp 1″F	2,5	1	25
530530	Rp 3/4″F	Rp 1″F	3	1	25



530

Safety relief valve.
Settings: 4 - 5 - 6 - 7 - 8 - 9 bar without TUV certification.
Discharge overpressure: 20 %.
Closing differential: 20 %.

Medium temperature range: 5–120 °C
Maximum percentage of glycol: 50 %
Medium: water, glycol solutions

CE 2797 TÜVRheinland ZERTIFIZIERT www.tuv.com ID 0000013864

Code	Connection	Drain connection	Pressure setting (bar)		
530625	Rp 1″F	Rp 1 1/4″F	2,5	1	25
530630	Rp 1″F	Rp 1 1/4″F	3	1	25
530640	Rp 1″F	Rp 1 1/4″F	4	1	25
530650	Rp 1″F	Rp 1 1/4″F	5	1	25
530660	Rp 1″F	Rp 1 1/4″F	6	1	25
530670	Rp 1″F	Rp 1 1/4″F	7	1	25
530680	Rp 1″F	Rp 1 1/4″F	8	1	25
530690	Rp 1″F	Rp 1 1/4″F	9	1	25
530725	Rp 1 1/4″F	Rp 1 1/2″F	2,5	1	10
530730	Rp 1 1/4″F	Rp 1 1/2″F	3	1	10
530740	Rp 1 1/4″F	Rp 1 1/2″F	4	1	10
530750	Rp 1 1/4″F	Rp 1 1/2″F	5	1	10
530760	Rp 1 1/4″F	Rp 1 1/2″F	6	1	10
530770	Rp 1 1/4″F	Rp 1 1/2″F	7	1	10
530780	Rp 1 1/4″F	Rp 1 1/2″F	8	1	10
530790	Rp 1 1/4″F	Rp 1 1/2″F	9	1	10

SAFETY RELIEF VALVES FOR DOMESTIC WATER SYSTEMS

Safety relief valves



531

Safety relief valve **for domestic water systems**. Female connections.
Note (*): with PZH certification
Discharge overpressure: 20 %.
Closing differential: 20 %.

Medium temperature range: 5–95 °C
Medium: domestic water

Code	Connection	Drain connection	Notes	Pressure setting (bar)		
531440	1/2″F	3/4″F	-	4	1	50
531460	1/2″F	3/4″F	(*)	6	1	50
531480	1/2″F	3/4″F	(*)	8	1	50
531410	1/2″F	3/4″F	(*)	10	1	50
531540	Rp 3/4″F	Rp 1″F	-	4	1	25
531560	Rp 3/4″F	Rp 1″F	-	6	1	25
531580	Rp 3/4″F	Rp 1″F	-	8	1	25
531510	Rp 3/4″F	Rp 1″F	-	10	1	25



531

Safety relief valve **for domestic water systems**. Female connections.
Note (*): with PZH certification
Discharge overpressure: 20 %.
Closing differential: 20 %.

Medium temperature range: 5–95 °C
Medium: domestic water

Code	Connection	Drain connection	Notes	Pressure setting (bar)		
531640	Rp 1″F	Rp 1 1/4″F	-	4	1	25
531660	Rp 1″F	Rp 1 1/4″F	-	6	1	25
531680	Rp 1″F	Rp 1 1/4″F	-	8	1	25
531610	Rp 1″F	Rp 1 1/4″F	-	10	1	25
531740	Rp 1 1/4″F	Rp 1 1/2″F	-	4	1	10
531760	Rp 1 1/4″F	Rp 1 1/2″F	(*)	6	1	10
531780	Rp 1 1/4″F	Rp 1 1/2″F	(*)	8	1	10
531710	Rp 1 1/4″F	Rp 1 1/2″F	(*)	10	1	10

Temperature and pressure relief valves



309

Temperature and pressure relief valve.
For domestic water system, to protect the hot water storage
Certified to EN 1490 with settings: 4 - 7 - 10 bar.
Temperature setting: 90 °C
Material: dezincification resistant brass DR

Code	Main connection	Drain connection	Pressure setting (bar)	Maximum discharge rating (kW)	Probe/cable length (mm)		
309430	1/2″M	Ø 15	3	10	100	1	20
309440	1/2″M	Ø 15	4	10	100	1	20
309460	1/2″M	Ø 15	6	10	100	1	20
309470	1/2″M	Ø 15	7	10	100	1	20
309400	1/2″M	Ø 15	10	10	100	1	20
309542	3/4″M	Ø 15	4	10	100	1	20
309530	3/4″M	Ø 22	3	25	100	1	20
309560	3/4″M	Ø 22	6	25	100	1	20
309570	3/4″M	Ø 22	7	25	100	1	20
309500	3/4″M	Ø 22	10	25	100	1	20
309435	1/2″M	Ø 15	3	10	200	1	20
309445	1/2″M	Ø 15	4	10	200	1	20
309465	1/2″M	Ø 15	6	10	200	1	20
309475	1/2″M	Ø 15	7	10	200	1	20
309405	1/2″M	Ø 15	10	10	200	1	20
309547	3/4″M	Ø 15	4	10	200	1	20
309535	3/4″M	Ø 22	3	25	200	1	20
309565	3/4″M	Ø 22	6	25	200	1	20
309575	3/4″M	Ø 22	7	25	200	1	20
309505	3/4″M	Ø 22	10	25	200	1	20



309

Temperature and pressure relief valve.
For domestic water system, to protect the hot water storage.
For systems with nominal pressure of 400 kPa.

Temperature setting: 95 °C
Pressure setting: 6 bar
Material: dezincification resistant brass DR

SANS 198

Code	Main connection	Drain connection	Probe/cable length (mm)	Maximum discharge rating (kW)		
309563	3/4″M	Ø 22	100	25	1	20

DIFFERENTIAL PRESSURE CONTROL DEVICES

Differential by-pass valve



519

Differential by-pass valve, adjustable with graduated scale.

Maximum working pressure: 10 bar
Medium temperature range: 0–110 °C
Medium: water, glycol solutions
Maximum percentage of glycol: 30 %

WRAS APPROVED PRODUCT CERTIFICATION MARK

Code	Inlet connection	Outlet connection	Setting range (m w.g.)		
519002	Ø 22	Ø 22	1–6	1	50
519500	3/4″ F	3/4″ M	1–6	1	50
519504	3/4″ F	3/4″ M	10–40	1	50
519700	1 1/4″ F	1 1/4″ M	1–6	1	10
519703	1 1/4″ F	1 1/4″ M	5–25	1	10



518

Differential by-pass valve, adjustable with graduated scale.

Maximum working pressure: 10 bar
Medium temperature range: 0–100 °C
Medium: water, glycol solutions
Maximum percentage of glycol: 30 %

Code	Connection	Setting range (m w.g.)		
518015	3/4″ M	1–6	1	25



518

Differential by-pass valve, adjustable with graduated scale.

Maximum working pressure: 10 bar
Medium temperature range: 0–100 °C
Maximum percentage of glycol: 30 %
Medium: water, glycol solutions

Code	Inlet connection	Outlet connection	Setting range (m w.g.)		
518500	3/4″ F	3/4″ M	1–6	1	25
518002	Ø 22	Ø 22	1–6	1	25
518012	Ø 22	Ø 22	3–10	1	25

CHECK VALVES

Standard check valves with shut-off



327 BALLSTOP

Ball valve with built-in check valve for heating systems.
Low pressure drops.

Maximum working pressure: 16 bar
Medium temperature range: 5–110 °C

Code	Connection	Notes		
327400	1/2″ F	butterfly handle	10	-
327500	3/4″ F	butterfly handle	10	-
327600	1″ F	lever handle	4	-
327700	1 1/4″ F	lever handle	4	-
327800	1 1/2″ F	lever handle	2	-
327900	2″ F	lever handle	1	-



510

Anti-thermosiphon check valve to prevent natural circulation of water.
Straight or angled connections, by moving the cap.

Maximum working pressure: 10 bar
Medium temperature range: 5–110 °C

Code	Connection		
510500	3/4″ F	1	20
510600	1″ F	1	20
510700	1 1/4″ F	1	20

INSTRUMENT HOLDERS

Brass instrument holder



336

Assembled instrument holder for heating systems.
Complete with:
- air vent;
- safety relief valve;
- pressure gauge;
- automatic shut-off cock for expansion vessel.

Medium temperature range: 5–110 °C
Maximum discharge rating: 50 kW

Code	Connection	Notes	Pressure setting (bar)		
336630	3/4″ F	with automatic shut-off cock	3	1	5
336631	3/4″ F	with ball shut-off cock	3	1	5



302

Combined air separator with heating system accessories.
Complete with air vent, safety relief valve, pressure gauge.
With insulation.

Medium temperature range: 5–110 °C
Maximum discharge rating: 50 kW

Code	Connection	Notes	Pressure setting (bar)		
302630	1″ F	without insulation	3	1	10
302631	1″ F	-	3	1	10



336

Instrument holder for heating systems.
Complete with automatic shut-off cock for expansion vessel and male connection for safety valve 531 series.
Up to 50 kW.

Medium temperature range: 5–110 °C

Code	Connection	Notes		
336600	3/4″ F	with ball shut-off valve	2	10

Steel instrument holder



335

Assembled wall mounting manifold.
Complete with:
- automatic air vent;
- safety relief valve; pressure gauge;
- automatic shut-off cock for expansion vessel.

Medium temperature range: 5–110 °C
Material: steel

Code	Connection	Notes		
335631	3/4″ M	can be used up to 50 kW / with shut-off valve	5	-
335632	3/4″ M	can be used up to 50 kW / with shut-off valve	1	5

Technopolymer instrument holder

305

Instrument holder kit in technopolymer material for heating systems.
Complete with:
- air vent;
- safety relief valve in technopolymer material;
- pressure gauge;
- automatic shut-off cock for expansion vessels and fixing brackets.
With insulation.

Medium temperature range: 5–90 °C
Maximum discharge rating: 50 kW

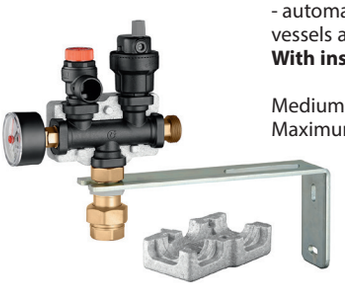

Code	Connection	Notes	Pressure setting (bar)		
305503	3/4″ F	safety valve TÜV certified	3	1	10



305

Instrument holder in technopolymer material for heating systems.
Complete with:
- air vent;
- safety relief valve in technopolymer material;
- pressure gauge.
With insulation.

Medium temperature range: 5–90 °C
Maximum discharge rating: 50 kW

Code	Connection	Notes	Pressure setting (bar)		
305663	1″ F	safety valve TÜV certified	3	1	5



305

Instrument holder in technopolymer material for heating systems.
Complete with:
- air vent in technopolymer material;
- safety relief valve;
- pressure gauge.
With insulation.

Medium temperature range: 5–90 °C
Maximum discharge rating: 50 kW
Material: technopolymer

Code	Connection	Notes	Pressure setting (bar)		
305671	1″ F	-	1,8	1	5
305673	1″ F	safety valve NF certified	3	1	5
305674	1″ F	without insulation	4	1	5

FILLING UNITS

Standard filling units



553

Automatic filling unit, with manual cock, strainer, check valve.

Maximum upstream pressure: 16 bar
Medium temperature range: 5–70 °C
Adjustment pressure range: 0,3–4 bar

Code	Inlet connection	Outlet connection	Notes		
553040	1/2″ M	1/2″ F	with pressure gauge connection 1/4″ F	1	10
553140	1/2″ M	1/2″ F	with pressure gauge	1	10



553

Pre-adjustable automatic filling unit, anti-scale, inspectionable, with pressure setting indicator, manual cock, strainer, check valve.

Maximum upstream pressure: 16 bar
Medium temperature range: 5–65 °C
Adjustment pressure range: 0,2–4 bar

Code	Inlet connection	Outlet connection	Notes		
553540	1/2″ M	1/2″ F	with pressure gauge connection 1/4″ F	1	10
553640	1/2″ M	1/2″ F	with pressure gauge	1	10



553

Pre-adjustable automatic filling unit, anti-scale, inspectionable, with pressure setting indicator, manual cock, strainer, check valve. With hose connection.

Medium temperature range: 2–65 °C
Maximum upstream pressure: 16 bar
Adjustment pressure range: 0,2–4 bar

Code	Inlet connection	Outlet connection	Notes		
553740	Ø 15 hose connection	1/2″ F	with pressure gauge connection 1/4″	1	10
553840	Ø 15 hose connection	1/2″ F	with pressure gauge	1	10



554

Pre-adjustable automatic filling unit for high flow rates, with double shut-off valve, check valve.
Self-contained replaceable cartridge.

Maximum upstream pressure: 16 bar
Medium temperature range: 5–60 °C
Adjustment pressure range: 1–6 bar

Code	Connection	Notes		
554040	1/2″ F	with pressure gauge connection 1/4″ F	1	-
554140	1/2″ F	with pressure gauge	1	-
554150	3/4″ F	with pressure gauge	1	-

Boiler filling loop



3006 ROBOFIL

Boiler filling loop.
Complete with:
- double check valve with shut-off valve;
- hose connection;
- shut-off valve.

Maximum working pressure: 10 bar
Medium temperature range: 2–95 °C
Length hose: 0,4 m
Material: dezincification resistant brass DR

Code		
300600	10	-

Charging unit with CA type backflow preventer

573

Automatic charging unit with **CAa type backflowpreventer** and shut-off valve.
Backflow preventer certified to EN 14367 standard.

Maximum working pressure: 10 bar
Medium temperature range: 5–65 °C
Adjustment pressure range: 0,2–4 bar



Code	Connection		
573001	1/2″ F	1	4

Charging unit with BA type backflow preventer

574

Compact automatic charging unit with **BA type backflow preventer**, shut-off valve and strainer.
With insulation.
Backflow preventer conforming to EN 12729.

Maximum working pressure: 10 bar
Medium temperature range: 2–65 °C
Adjustment pressure range: 0,2–4 bar



Code	Connection		
574011	1/2″ M	1	5

574

Automatic charging unit with **BA type backflowpreventer**, Y-strainer and shut-off valve.
Backflow preventer certified to EN 12729 standard.

Maximum working pressure: 10 bar
Medium temperature range: 5–65 °C
Adjustment pressure range: 0,2–4 bar



Code	Connection		
574000	1/2″ F	1	-

574

Automatic charging unit with **BA type backflowpreventer**, Y-strainer and shut-off valve.
Backflow preventer certified to EN 12729 standard.

Maximum working pressure: 10 bar
Medium temperature range: 5–60 °C
Adjustment pressure range: 1–6 bar



Code	Connection		
574001	3/4″ F	1	-

Compact charging unit with BA type backflow preventer



580

Automatic compact charging unit to EN 1717 standard with **BA type backflow preventer**, shut-off valve, strainer, pressure test ports for controlling the backflow preventer, pressure reducing valve.
For horizontal or vertical installations.
With insulation.
Backflow preventer certified to EN 12729 standard.
Pressure reducing valve certified to EN 1567 standard.
PATENT

Maximum working pressure: 10 bar
Medium temperature range: 5–65 °C
Adjustment pressure range: 0,8–4 bar
Material: brass

Code	Connection		
580011	1/2″ M	1	6

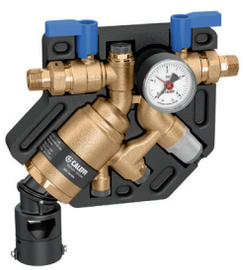

580

Automatic compact charging unit to EN 1717 standard with **BA type backflow preventer**, shut-off valve, strainer, pressure test ports for controlling the backflow preventer, pressure reducing valve.
For horizontal or vertical installations.
With insulation.
Backflow preventer conforming to EN 12729. Pressure reducing valve certified to EN 1567 standard.

Maximum working pressure: 10 bar
Medium temperature range: 2–65 °C
Material: dezincification resistant brass DR
Adjustment pressure range: 0,8–4 bar

Code	Connection		
580010	1/2″ M	1	5

Backflow prevention reference standards. To avoid water backflow from the heating system, which is polluted and hazardous for human health, it is indispensable to install an automatic charging unit with a backflow preventer. The correct use of hydraulic backflow preventers is governed by the European reference standard EN 1717 (“Protection against pollution of potable water in water installations and general requirements of devices to prevent pollution by backflow”).

ACCESSORIES FOR EXPANSION VESSELS

Shut-off cocks for expansion vessels



558

Automatic shut-off cock, for expansion vessels. **For domestic water circuit.**

Maximum working pressure: 10 bar
Medium temperature range: 5–110 °C

Code	Inlet connection	Outlet connection		
558500	3/4″ F	3/4″ M	1	50



558

Automatic shut-off cock, for expansion vessel, with drain cock. **For domestic water circuit.**

Maximum working pressure: 6 bar
Medium temperature range: 5–85 °C

Code	Inlet connection	Outlet connection		
558510	3/4″ F	3/4″ M	1	50



5580

Ball shut-off valve, for expansion vessels, with drain cock. **For domestic water system.**

Maximum working pressure: 6 bar
Medium temperature range: 5–85 °C

Code	Connection		
558050	3/4″ F	1	20
558060	1″ F	1	20
558070	1 1/4″ F	1	20



5580

Ball shut-off valve for expansion vessels, with drain cock. **For solar thermal systems.**

Maximum working pressure: 6 bar
Medium temperature range: 5–120 °C
Medium: water, glycol solutions
Maximum percentage of glycol: 50 %

Code	Connection		
558052	3/4″ F	1	20
558062	1″ F	1	20

CONTROL DEVICES AND ACCESSORIES

Air separators



547

Air separator.

Material: cast iron

Code	Connection		
547060	1″F	1	-
547070	1 1/4″F	1	-
547080	1 1/2″F	1	-
547090	2″F	1	-
547200	2 1/2″F	1	-
547300	3″F	1	-



547

Air separator.
To be coupled with flat counterflanges EN 1092-1.

Material: steel
Finish: coated

Code	Connection		
547400	DN 100 - PN 16	1	-
547500	DN 125 - PN 16	1	-

Pressure and float switch



625

Safety pressure switch, with manual reset.

Maximum working pressure: 5 bar
Medium temperature range: 20–110 °C
Ambient temperature range: 0–50 °C
Protection class: IP 44
Contact rating (250 V): 16 (10) A

CE

Code	Connection	Adjustment pressure range (bar)		
625000	1/4″F	2–4,5	1	10



625

Pressure switch for boosting sets and domestic water applications.

Medium temperature range: 0–55 °C
Ambient temperature range: 0–55 °C
Protection class: IP 44
Contact rating (up to 500V tripolar): 16 (10) A

CE

Code	Connection	Maximum working pressure (bar)	Adjustment pressure range (bar)		
625010	1/4″F	12	3–12	1	10
625005	1/4″F	5	1–5	1	10



625

Minimum pressure safety switch, with manual reset.

Maximum working pressure: 5 bar
Medium temperature range: 20–110 °C
Ambient temperature range: 0–50 °C
Protection class: IP 44
Contact rating (250 V): 16 (10) A

CE

Code	Connection	Adjustment pressure range (bar)		
625100	1/4″F	0,5–1,7	1	10



613

Float switch, 250 V 10 A.
Approved for heavy commissioning.

Code	Probe/cable length (m)		
613030	3	1	5
613050	5	1	5

Thermostats



621

Adjustable contact thermostat.

Adjustment temperature range: 20–90 °C
Protection class: IP 20

Code		
621000	1	10



622

Adjustable immersion thermostat.

Adjustment temperature range: 0–90 °C
Protection class: IP 40

Code	Pocket connection		
622000	1/2″ M	1	10



623

Double immersion thermostat.
Safety thermostat with manual reset:
- setting 96 °C (±3 °C);
- setting 110 °C (+0 °C -6 °C).

Adjustment thermostat:
- temperature range: 0–90 °C;
- temperature range: 0–100 °C.

With 1/2″ connection pocket.

Protection class: IP 40

Code	Pocket connection	Adjustment temperature (°C)	Double thermostat safety setting (°C)		
623000	1/2″ MNPT	0–90	100	1	5
623100	1/2″ M	0–100	110	1	5



624

Immersion safety thermostat, with manual reset.
Setting:
96 °C (±3 °C);
110 °C (+0 °C -6 °C).
With 1/2″ connection pocket.

Protection class: IP 40

Code	Pocket connection	Taratura di sicurezza (°C)		
624000	1/2″ MNPT	96	1	10
624100	1/2″ M	110	1	10



622

Stainless steel pocket for domestic application.
For thermostat code 622000.

Maximum working pressure: 10 bar
Medium temperature range: 0–100 °C

Code	Connection	Article use		
622010	1/2″ M	622000	1	-



622

Pocket.
For 622 and 624 series.

Code	Article use	
622401	622000, 624000, 624100	100



623

Pocket.
For 623 series.

Code	Article use	
623002	623000, 623100	100

Flow switches

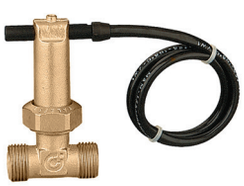

315

Flow switch with magnetically operated contacts.

Maximum working pressure: 6 bar
Medium temperature range: -15–100 °C
Contact rating (230 V): 0,02 A

Code	Connection	Contact opening (decreasing flow) (l/h)	Contact closing (increasing flow) (l/h)		
315400	1/2″ M	108	156	30	-
315500	3/4″ M	348	456	30	-

An appropriate relais must be used in case of higher power consumption 0,02 A.



626

Flow switch.
For pipes from 1″ to 8″.

Maximum working pressure: 10 bar
Medium temperature range: -30–120 °C
Protection class: IP 54
Contact rating (250 V): 15 (5) A

Code	Connection		
626600	1″ M	1	5



626

Set of blades.

Code	Article use		
626009	626600	1	-

Pressure gauges



557

Pressure gauge.

Accuracy class: Pressure gauge UNI 2,5
Medium temperature range: -20–90 °C

Code	Connection	Pressure gauge scale (bar)	Ø (mm)		
557104	1/4″ M central back conn.	0–4	50	1	20
557106	1/4″ M central back conn.	0–6	50	1	20
557204	1/4″ M "off-centred" back conn.	0–4	50	1	20
557304	1/4″ M radial connection	0–4	50	1	20
557306	1/4″ M radial connection	0–6	50	1	20
557310	1/4″ M radial connection	0–10	50	1	20
557410	1/4″ M central back conn.	0–10	63	1	20
557425	1/4″ M central back conn.	0–25	63	1	20
557704	3/8″ M radial connection	0–4	80	1	50
557706	3/8″ M radial connection	0–6	80	1	50
557710	3/8″ M radial connection	0–10	80	1	50



5560

Pressure gauge for expansion vessel pressure test.

Accuracy class: Pressure gauge UNI 2,5

Code	Pressure gauge scale (bar)		
556000	0–10	1	10



689

Flow gauge.

Accuracy class: Pressure gauge UNI 2,5
Ø: 80 mm
Medium temperature range: -20–90 °C

Code	Connection	Flow gauge scale (m w.g.)		
689010	3/8″ M radial connection	0–10	1	20
689016	3/8″ M radial connection	0–16	1	20
689025	3/8″ M radial connection	0–25	1	30

Temperature gauges



692

Thermometer in sleeve.

Temperature gauge scale: 0–120 °C
Length pocket: 45 mm
Medium temperature range: 0–120 °C

Code	Connection		
692000	1/2″ M	1	-



693

Bulb thermometer.

Temperature gauge scale: 0–120 °C
Medium temperature range: 0–120 °C

Code			
693000		1	-



687

Temperature gauge for cooling.
With pocket.

Temperature gauge scale: -30–50 °C
Accuracy class: Temperature gauge UNI 2
Ø: 80 mm
Medium temperature range: -30–50 °C

Code	Connection	Length pocket (mm)		
687000	1/2″ M central back conn.	45	1	10
687010	1/2″ M central back conn.	100	1	5



687

Temperature gauge for cooling systems.
With pocket.

Temperature gauge scale: -30–50 °C
Accuracy class: Temperature gauge UNI 2
Ø: 80 mm
Medium temperature range: -30–50 °C

Code	Connection	Length pocket (mm)		
687110	1/2″ M radial connection	100	1	10



688

Temperature gauge.
With pocket.

Temperature gauge scale: 0–120 °C
Accuracy class: Temperature gauge UNI 2
Ø: 80 mm
Medium temperature range: 0–120 °C

Code	Connection	Notes	Length pocket		
688000	1/2″ M central back conn.	-	45 mm	1	10
688010	1/2″ M central back conn.	-	100 mm	1	5
688011	1/2″ M central back conn.	without pocket	-	1	5



688

Temperature gauge.
With pocket.

Temperature gauge scale: 0–120 °C
Accuracy class: Temperature gauge UNI 2
Ø: 80 mm
Medium temperature range: 0–120 °C

Code	Connection	Length pocket (mm)		
688100	1/2″ M radial connection	45	1	10

Temperature/pressure gauges



503

Temperature/pressure gauge.
With shut-off pocket.

Temperature gauge scale: 0–120 °C
Accuracy class: Temperature gauge UNI 2,
Pressure gauge UNI 2,5
Ø: 80 mm

Code	Connection	Pressure gauge scale (bar)		
503040	1/2″ M central back conn.	0–4	1	10
503060	1/2″ M central back conn.	0–6	1	10



503

Temperature/pressure gauge.
With shut-off pocket.

Temperature gauge scale: 0–120 °C
Accuracy class: Pressure gauge UNI 2,5,
Temperature gauge UNI 2
Ø: 80 mm

Code	Connection	Pressure gauge scale (bar)		
503140	1/2″ M radial connection	0–4	1	20
503160	1/2″ M radial connection	0–6	1	20
503110	1/2″ M radial connection	0–10	1	20

Accessories



538

Drain cock with hose connection and cap.

Maximum working pressure: 10 bar
Medium temperature range: 5–110 °C

Code	Connection		
538201	1/4″ M	1	100
538400	1/2″ M	1	100



538

Drain cock with hose connection and cap.
Complete with manual lever.

Maximum working pressure: 10 bar
Medium temperature range: 5–110 °C

Code	Connection		
538405	1/2″ M	1	100



694

INAIL test pocket.

Code	Pocket connection	Length pocket (mm)		
694045	1/2″ M	45	1	10
694100	1/2″ M	100	1	10



690

Three way tap for INAIL master pressure gauge.
Conforms to INAIL standards (previously ISPESL).

Maximum working pressure: 15 bar
Medium temperature range: 5–90 °C

Code	Connection 1	Connection 2		
690200	1/4″ M	1/4″ F	5	50
690300	3/8″ M	3/8″ F	5	50
690400	1/2″ M	1/2″ F	5	50



691

Water hammer reducing loop.

Finish: chrome plated
Material: copper

Code	Connection 1	Connection 2		
691200	1/4″ M	1/4″ F	5	-
691300	3/8″ M	3/8″ F	5	-
691400	1/2″ M	1/2″ F	5	-

STRAINERS

Inspectable strainer with shut-off valve



5771 FILTERSTOP

Inspectable strainer with shut-off function.
HEATING SYSTEMS APPLICATION:
Maximum working pressure: 10 bar
Medium temperature range: 0–90 °C
Maximum percentage of glycol: 30 %
Medium: water, glycol solutions
DOMESTIC WATER SYSTEMS APPLICATION:
Maximum working pressure: 16 bar
Medium temperature range: 5–40 °C
PATENT PENDING

Code	Connection	Strainer mesh size ∅ (mm)	Kv (m^3/h)		
577105	3/4″F	0,16	7,2	1	12
577106	1″F	0,16	7,2	1	12

Operation

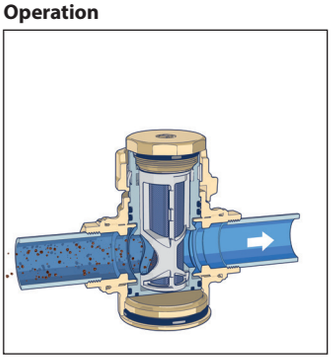

Shut-off

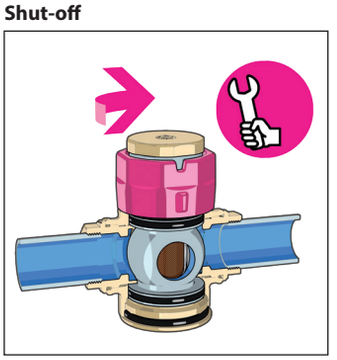

Discharge

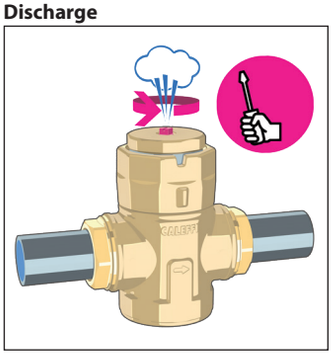

Cap removal

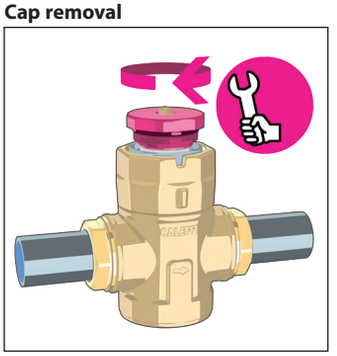

Mesh extraction

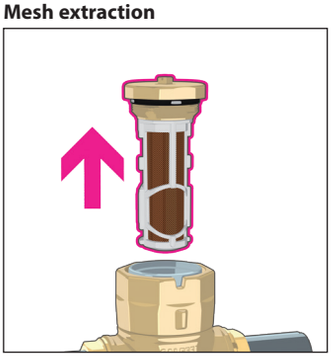

Mesh cleaning

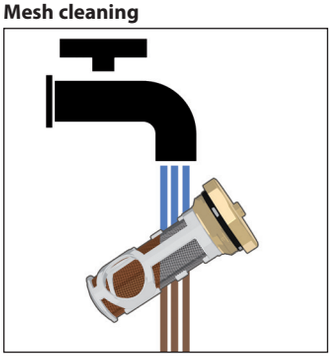

Threaded strainers for domestic hot water/ heating systems



577

Y-strainer.
Filtering mesh in stainless steel AISI 304.

Medium temperature range: -20–110 °C
Maximum percentage of glycol: 30 %
Medium: water, glycol solutions
Material: bronze

Code	Connection	Strainer mesh size ∅ (mm)	Kv (m^3/h)	PN		
577004	1/2″F	0,40	2,5	PN 16	1	
577005	3/4″F	0,40	3,9	PN 16	1	-
577006	1″F	0,40	7	PN 16	1	
577007	1 1/4″F	0,47	16	PN 16	1	
577008	1 1/2″F	0,47	24	PN 16	1	-
577009	2″F	0,53	35	PN 16	1	-
577020	2 1/2″F	0,53	57	PN 10	1	-
577030	3″F	0,53	73	PN 10	1	-

Flanged strainers for heating systems



579

Y strainer for heating systems.
Ductile cast iron body, blue epoxy coating.
With drain cock.
Filtering mesh in stainless steel AISI 304.
To be coupled with flat counterflanges EN 1092-1.

Maximum working pressure: 16 bar
Medium temperature range: -10–110 °C
Nominal pressure: PN 16
Maximum percentage of glycol: 50 %
Medium: water, glycol solutions
Material: cast iron

Code	Connection	Strainer mesh size ∅ (mm)	Kv (m^3/h)		
579051	DN 50 - PN 16	1	28	1	-
579061	DN 65 - PN 16	1	37,2	1	-
579081	DN 80 - PN 16	1	62,2	1	-
579101	DN 100 - PN 16	1,6	149	1	-
579121	DN 125 - PN 16	1,6	320	1	-
579151	DN 150 - PN 16	1,6	367	1	-
579201	DN 200 - PN 16	1,6	652	1	-
579251	DN 250 - PN 16	2	844	1	-

DN 125, DN 150, DN 200, DN 250 with rhomboidal reinforcing mesh.

More filters for plumbing systems on page 217

HYDRAULIC SEPARATORS

Standard hydraulic separator



548

Hydraulic separator.
Complete with:
- air vent with automatic shut-off cock;
- drain cock with hose connection.

With insulation.

Maximum working pressure: 10 bar
Medium temperature range: 0–110 °C
Material: steel
Finish: coated

Code	Connection	Max. recommended flow rate (m^3/h)		
548006	1″ F	2,5	1	-
548007	1 1/4″ F	4	1	-
548008	1 1/2″ F	6	1	-
548009	2″ F	8,5	1	-



548

Hydraulic separator.
Temperature probe connection: 1/2″ F.
To be coupled with flat counterflanges EN 1092-1.
Complete with:
- automatic air vent;
- shut-off valve;
- drain valve.

With insulation.

Maximum working pressure: 10 bar
Material: steel
Finish: coated

Code	Connection	Max. recommended flow rate (m^3/h)	Medium temperature range (°C)		
548052	DN 50 - PN 16	9	0–105	1	-
548062	DN 65 - PN 16	18	0–105	1	-
548082	DN 80 - PN 16	28	0–105	1	-
548102	DN 100 - PN 16	56	0–105	1	-
548122	DN 125 - PN 16	75	0–100	1	-
548152	DN 150 - PN 16	110	0–100	1	-



548

Hydraulic separator.
Temperature probe connection: 1/2″ F.
To be coupled with flat counterflanges EN 1092-1.
Complete with:
- automatic air vent;
- shut-off valve;
- drain valve.

Maximum working pressure: 10 bar
Medium temperature range: 0–110 °C
Material: steel
Finish: coated

Code	Connection	Max. recommended flow rate (m^3/h)		
548200	DN 200 - PN 10	180	1	-
548250	DN 250 - PN 10	300	1	-
548300	DN 300 - PN 10	420	1	-

The hydraulic separator should be sized according to the maximum flow rate value at the inlet. The selected design value must be the greatest between the primary circuit and the secondary circuit.

Stainless steel hydraulic separator



548 NEW

Stainless steel hydraulic separator.
Complete with:
- air vent complete with automatic shut-off cock;
- drain cock.

With insulation.

Maximum working pressure: 6 bar
Medium temperature range: 5–80 °C
Material: stainless steel

Code	Connection	Max. recommended flow rate (m^3/h)	
548006IN	1″F	2,5	1
548007IN	1 1/4″F	4,5	1
548008IN	1 1/2″F	6	1
548009IN	2″F	10	1

Multifunction hydraulic separator



5495 SEP4

Multifunction hydraulic separator.
Complete with:
- hydraulic separator;
- automatic air vent;
- dirt separator;
- magnetic ring;
- drain cock with hose connection.

With insulation.

Maximum working pressure: 10 bar
Medium temperature range: 0–100 °C
Material: steel
Finish: coated

Code	Connection	Max. recommended flow rate (m^3/h)		
549506	1″F	2,5	1	-
549507	1 1/4″F	4	1	-
549508	1 1/2″F	6	1	-
549509	2″F	8,5	1	-

Function

The multifunction hydraulic separator combines different functional components, each of them to satisfy specific needs of heating and cooling system circuits.
It is supplied complete with hot pre-formed shell insulation to ensure perfect thermal insulation when used with both hot and chilled water.
The device is designed to carry out the following functions:

- **Hydraulic separation**
  To keep connected hydraulic circuits totally independent from each other.
- **Deaeration**
  Utilises the combined action of several physics principles: the widening of the cross section decreases the flow velocity and the technopolymer mesh creates whirling movements so as to facilitate the release of micro-bubbles. The bubbles, fusing with each other, increase in volume and, rising towards the top of the unit, are released through a float-operated automatic air vent.
- **Dirt separation**
  The dirt separator separates and collects any impurities in the circuits as they collide with the surface of the internal element.
- **Removal of magnetic particles**
  The special patented magnetic system also attracts ferromagnetic impurities in the water: the ferromagnetic particles are trapped in the collection zone, meaning they are prevented from being recirculated.

Deaeration

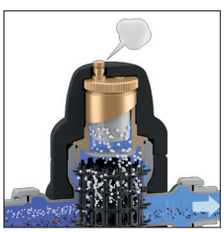

Hydraulic separation

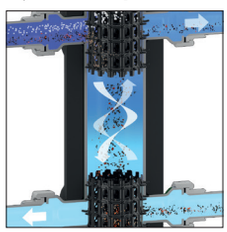

Dirt removal

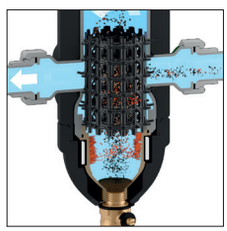

HYDRAULIC SEPARATORS-MANIFOLDS

SEPCOLL

559 SEPCOLL

Hydraulic separator-manifold for **heating and cooling systems**.
2 outlets.
Complete with mounting brackets.
With insulation.

Medium temperature range: 0–110 °C
Nominal pressure: PN 6
Material: steel
Main centre distance: 125 mm



Code	Main connection	Outlet connection		
559220	1″ F	1 1/2″ F - 2 out., captive nut	1	-

559 SEPCOLL

Hydraulic separator-manifold for **heating and cooling systems**.
2+1 outlets.
Complete with mounting brackets.
With insulation.

Medium temperature range: 0–110 °C
Nominal pressure: PN 6
Material: steel
Main centre distance: 125 mm



Code	Main connection	Outlet connection	Side connection		
559221	1″ F	1 1/2″ F - 2 out., captive nut	1″ F - 1 out.	1	-

559 SEPCOLL

Hydraulic separator-manifold for **heating and cooling systems**.
2+2 outlets.
Complete with mounting brackets.
With insulation.

Medium temperature range: 0–110 °C
Nominal pressure: PN 6
Material: steel
Main centre distance: 125 mm



Code	Main connection	Outlet connection		
559222	1 1/4″ F	1 1/2″ F - 4 out., captive nut	1	-

559 SEPCOLL

Hydraulic separator-manifold for **heating and cooling systems**.
3+1 outlets.
Complete with mounting brackets.
With insulation.

Medium temperature range: 0–110 °C
Nominal pressure: PN 6
Material: steel
Main centre distance: 125 mm



Code	Main connection	Outlet connection		
559231	1 1/4″ F	1 1/2″ F - 4 out., captive nut	1	-

Hydraulic connections

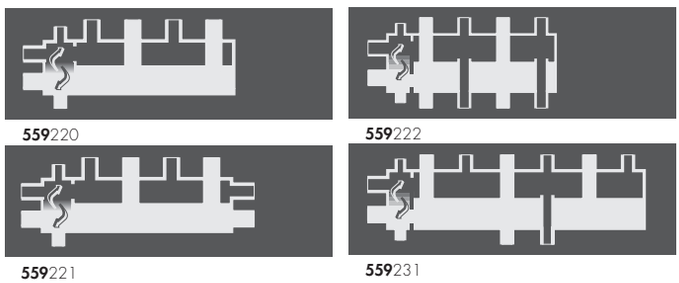

559220 **559**222

559221 **559**231

Maximum recommended flow rate at inlets of SEPCOLL separator 559 series

Codice	Primario	Secondario (totale)
559220	2 m³/h	5 m³/h
559221	2 m³/h	5 m³/h
559222	2,5 m³/h	6 m³/h
559231	2,5 m³/h	6 m³/h

Accessories for SEPCOLL



559

Pair of plugs with gaskets for unused outlets.
For 559 and 550 series with 125 mm centre distance.

Code	Connection		
559001	1 1/2″ M	1	-



559

Pocket with magnetic insert.
For 559 series.

Code	Connection		
559003	1/2″ M	1	-

MANIFOLDS FOR CENTRAL HEATING SYSTEM

Standard manifolds for central heating system

550 (KIT)

Manifold for **heating and cooling systems**.
2 outlets.

Main centre distance: 125 mm
Maximum working pressure: 10 bar
Medium temperature range: 5–110 °C
Material: steel



Code	Main connection	Outlet connection		
550020	1 1/4" M	1 1/2" F - 2 out., captive nut	1	-

550 (KIT)

Manifold for **heating and cooling systems**.
2+1 outlets.

Main centre distance: 125 mm
Maximum working pressure: 10 bar
Medium temperature range: 5–110 °C
Material: steel

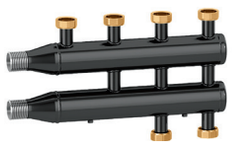

Code	Main connection	Outlet connection		
550021	1 1/4" M	1 1/2" F - 3 out., captive nut	1	-

550 (KIT)

Manifold for **heating and cooling systems**.
3 outlets.

Main centre distance: 125 mm
Maximum working pressure: 10 bar
Medium temperature range: 5–110 °C
Material: steel

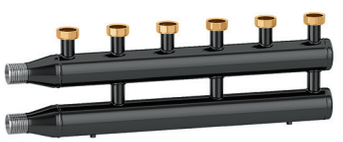

Code	Main connection	Outlet connection		
550030	1 1/2" M	1 1/2" F - 3 out., captive nut	1	-

550 (KIT)

Manifold for **heating and cooling systems**.
3+1 outlets.

Main centre distance: 125 mm
Maximum working pressure: 10 bar
Medium temperature range: 5–110 °C
Material: steel

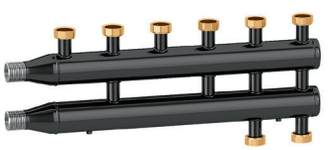

Code	Main connection	Outlet connection		
550031	1 1/2" M	1 1/2" F - 4 out., captive nut	1	-

550 (KIT)

Manifold for **heating and cooling systems**.
4 outlets.

Main centre distance: 125 mm
Maximum working pressure: 10 bar
Medium temperature range: 5–110 °C
Material: steel

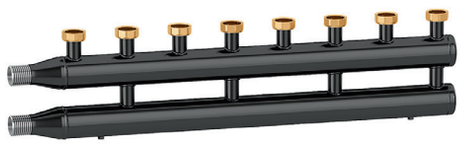

Code	Main connection	Outlet connection		
550040	1 1/2" M	1 1/2" F - 4 out., captive nut	1	-



550

Insulation for manifolds for central heating system 550 series.
For heating and cooling systems.

Code	Notes	Article use		
CBN550020	for manifold 2	550020	1	-
CBN550021	for manifold 2+1	550021	1	-
CBN550030	for manifold 3	550030	1	-
CBN550031	for manifold 3+1	550031	1	-
CBN550040	for manifold 4	550040	1	-



559

Pair of plugs with gaskets for unused outlets.
For 559 and 550 series with 125 mm centre distance.

Code	Connection		
559001	1 1/2" M	1	-



559

Pair of fittings with gaskets.
For 559 and 550 series with 125 mm outlet centre distance.

Code	Connection 1	Connection 2		
559002	1 1/2" M	1" M	1	-

(KIT) with optional insulation kit

Compact manifolds for central heating system DN 25

550

Manifold for **heating and cooling systems**.
2 outlets.
Complete with steel mounting brackets.
With insulation.

Main centre distance: 125 mm
Maximum recommended flow rate: 4 m³/h
Maximum working pressure: 6 bar
Medium temperature range: 5–110 °C
Material: steel



Code	Main connection	Outlet connection	
550220	1 1/2″ M	1 1/2″ F - 2 out., captive nut	1

550

Manifold for **heating and cooling systems**.
2+1 outlets.
Complete with steel mounting brackets.
With insulation.

Main centre distance: 125 mm
Maximum recommended flow rate: 4 m³/h
Maximum working pressure: 6 bar
Medium temperature range: 5–110 °C
Material: steel



Code	Main connection	Outlet connection	
550221	1 1/2″ M	1 1/2″ F - 3 out., captive nut	1

550

Manifold for **heating and cooling systems**.
3 outlets.
Complete with steel mounting brackets.
With insulation.

Main centre distance: 125 mm
Maximum recommended flow rate: 4 m³/h
Maximum working pressure: 6 bar
Medium temperature range: 5–110 °C
Material: steel



Code	Main connection	Outlet connection	
550230	1 1/2″ M	1 1/2″ F - 3 out., captive nut	1

550

Manifold for **heating and cooling systems**.
4 outlets.
Complete with steel mounting brackets.
With insulation.

Main centre distance: 125 mm
Maximum recommended flow rate: 4 m³/h
Maximum working pressure: 6 bar
Medium temperature range: 5–110 °C
Material: steel



Code	Main connection	Outlet connection	
550240	1 1/2″ M	1 1/2″ F - 4 out., captive nut	1

550

Manifold for **heating and coolingsystems**.
5 outlets.
Complete with steel mounting brackets.
With insulation.

Main centre distance: 125 mm
Maximum recommended flow rate: 4 m³/h
Maximum working pressure: 6 bar
Medium temperature range: 5–110 °C
Material: steel



Code	Main connection	Outlet connection		
550250	1 1/2″ M	1 1/2″ M - 5 out., captive nut	1	-



550

Hydraulic separator for heating and cooling systems.
For manifolds 550 series DN 25.
With insulation.

Main centre distance: 125 mm
Maximum recommended flow rate: 4 m³/h
Maximum working pressure: 6 bar
Medium temperature range: 5–110 °C
Material: steel

Code	Main connection	Outlet connection	
550205	1 1/2″ M	1 1/2″ F captive nut	1

Compact manifolds for central heating system DN 32

550

Manifold for **heating and cooling systems**.
2 outlets.
Complete with steel mounting brackets.
With insulation.

Main centre distance: 125 mm
Maximum recommended flow rate: 9 m³/h
Maximum working pressure: 6 bar
Medium temperature range: 5–110 °C
Material: steel



Code	Main connection	Outlet connection	
550320	2″ M	1 1/2″ F - 2 out., captive nut	1

550

Manifold for **heating and cooling systems**.
3 outlets.
Complete with steel mounting brackets.
With insulation.

Main centre distance: 125 mm
Maximum recommended flow rate: 9 m³/h
Maximum working pressure: 6 bar
Medium temperature range: 5–110 °C
Material: steel



Code	Main connection	Outlet connection	
550330	2″ M	1 1/2″ F - 3 out., captive nut	1

550

Manifold for **heating and cooling systems**.
4 outlets.
Complete with steel mounting brackets.
With insulation.

Main centre distance: 125 mm
Maximum recommended flow rate: 9 m³/h
Maximum working pressure: 6 bar
Medium temperature range: 5–110 °C
Material: steel



Code	Main connection	Outlet connection	
550340	2″ M	1 1/2″ F - 4 out., captive nut	1

550

Manifold for **heating and cooling systems**.
5 outlets.
Complete with steel mounting brackets.
With insulation.

Main centre distance: 125 mm
Maximum recommended flow rate: 9 m³/h
Maximum working pressure: 6 bar
Medium temperature range: 5–110 °C
Material: steel



Code	Main connection	Outlet connection		
550350	2″ M	1 1/2″ F - 5 out., captive nut	1	-



550

Hydraulic separator for heating and cooling systems.
For manifolds 550 series DN 32.
With insulation.

Main centre distance: 125 mm
Maximum recommended flow rate: 9 m³/h
Maximum working pressure: 6 bar
Medium temperature range: 5–110 °C
Material: steel

Code	Main connection	Outlet connection	
550305	2″ M	2″ F captive nut	1



559

Pair of plugs with gaskets for unused outlets.
For 559 and 550 series with 125 mm centre distance.

Code	Connection		
559001	1 1/2″ M	1	-



559

Pair of fittings with gaskets.
For 559 and 550 series with 125 mm outlet centre distance.

Code	Connection 1	Connection 2		
559002	1 1/2″ M	1″ M	1	-

Stainless steel manifolds for central heating system

550 NEW

Stainless steel manifold for **heating and cooling systems**.
2 outlets.
With insulation.

Main centre distance: 125 mm
Maximum working pressure: 6 bar
Medium temperature range: 5–80 °C
Material: stainless steel



Code	Main connection	Outlet connection	
550020IN	1″F	1 1/2″F - 2 out., captive nut	1

550 NEW

Stainless steel manifold for **heating and cooling systems**.
3 outlets.
With insulation.

Main centre distance: 125 mm
Maximum working pressure: 6 bar
Medium temperature range: 5–80 °C
Material: stainless steel



Code	Main connection	Outlet connection	
550030IN	1″F	1 1/2″F - 3 out., captive nut	1

550 NEW

Stainless steel manifold for **heating and cooling systems**.
4 outlets.
With insulation.

Main centre distance: 125 mm
Maximum working pressure: 6 bar
Medium temperature range: 5–80 °C
Material: stainless steel



Code	Main connection	Outlet connection	
550040IN	1″F	1 1/2″F - 4 out., captive nut	1

SUPPLY UNITS

Stainless steel supply units



165 NEW

Stainless steel direct supply unit **DN 25,** for **heating and cooling systems.**
Right - Left convertible.
With insulation.

Maximum working pressure: 10 bar
Medium temperature range: 5–100 °C
Electric supply: 230 V AC
Outlet centre distance: 125 mm
Type of pump: Para 25-7

Code	System side connection	Boiler side connection	Flow rate avail. head 4 m w.g. (m^3/h)	
165600IN	1″F	1 1/2″M	1,6	1



166 NEW

Stainless steel thermostatic regulating unit **DN 25,** for **heating systems.**
Right - Left convertible.
With insulation.

Maximum working pressure: 10 bar
Medium temperature range: 5–100 °C
Electric supply: 230 V AC
Outlet centre distance: 125 mm
Type of pump: Para 25-7

Code	System side connection	Boiler side connection	Adjustment temperature (°C)	Flow rate avail. head 4 m w.g. (m^3/h)	
166600IN	1″F	1 1/2″M	25–50	1,4	1



167 NEW

Stainless steel motorised regulating unit **DN 25,** for **heating and cooling systems.**
Right - Left convertible. Actuator with three-point control signal.
With insulation.

Maximum working pressure: 10 bar
Medium temperature range: 5–100 °C
Electric supply: 230 V AC
Outlet centre distance: 125 mm
Type of pump: Para 25-7

Code	System side connection	Boiler side connection	Flow rate avail. head 4 m w.g. (m^3/h)	
167652IN	1″F	1 1/2″M	1,4	1

Direct supply units

DN 25



165

Direct supply unit **DN 25**, for **heating and cooling systems**.
Right - left convertible.
With insulation.

Maximum working pressure: 10 bar
Medium temperature range: 5–100 °C
Electric supply: 230 V AC
Main centre distance: 125 mm
Type of pump: UPM3K Auto 25-70

CE

Code	System side connection	Boiler side connection	Flow rate avail. head 4 m w.g. (m^3/h)		
165600A2L	1″F	1 1/2″M	1,6	1	-

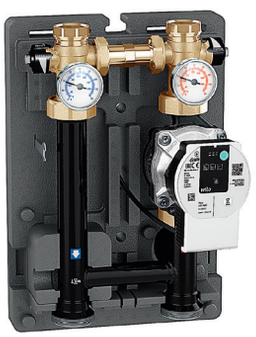

165

Direct supply unit **DN 25**, for **heating and cooling systems**.
Right - left convertible.
With insulation.

Maximum working pressure: 10 bar
Medium temperature range: 5–100 °C
Electric supply: 230 V AC
Main centre distance: 125 mm
Type of pump: Para 25-7

CE

Code	System side connection	Boiler side connection	Flow rate avail. head 4 m w.g. (m^3/h)		
165640HE3	1″F	1 1/2″M	1,6	1	-

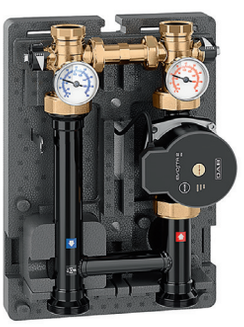

165

Direct supply unit **DN 25**, for **heating and cooling systems**.
Right - left convertible.
With insulation.

Maximum working pressure: 10 bar
Medium temperature range: 5–100 °C
Electric supply: 230 V AC
Main centre distance: 125 mm
Type of pump: EVOSTA2 70/130

CE

Code	System side connection	Boiler side connection	Flow rate avail. head 4 m w.g. (m^3/h)		
165640HE5	1″F	1 1/2″M	1,6	1	-

DN 32

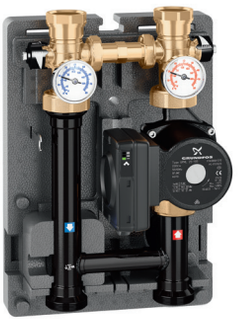

165

Direct supply unit **DN 32**, for **heating systems**.
Right - left convertible.
With insulation.

Maximum working pressure: 10 bar
Medium temperature range: 5–100 °C
Electric supply: 230 V AC
Main centre distance: 125 mm
Type of pump: UPML 25-105

CE

Code	System side connection	Boiler side connection	Flow rate avail. head 4 m w.g. (m^3/h)		
165601UPM	1 1/4″F	1 1/2″M	3,4	1	-

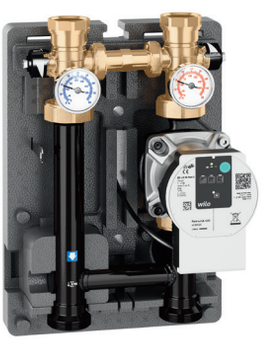

165

Direct supply unit **DN 32**, for **heating and cooling systems**.
Right - left convertible.
With insulation.

Maximum working pressure: 10 bar
Medium temperature range: 5–100 °C
Electric supply: 230 V AC
Main centre distance: 125 mm
Type of pump: Para 25-9

CE

Code	System side connection	Boiler side connection	Flow rate avail. head 4 m w.g. (m^3/h)		
165641HE4	1 1/4″F	1 1/2″M	2,7	1	-

For distribution units fitted for heat metering, refer to Section 12

Thermostatic regulating units

DN 25



166

Thermostatic regulating unit **DN 25**, for **heating systems**.
Right - left convertible.
With insulation.

Maximum working pressure: 10 bar
Medium temperature range: 5–100 °C
Electric supply: 230 V AC
Main centre distance: 125 mm
Type of pump: ELIMINARE

CE

Code	System side connection	Boiler side connection	Adjustment temperature (°C)	Flow rate avail. head 4 m w.g. (m^3/h)		
166600A2L	1″F	1 1/2″M	25–50	1,4	1	-
166605A2L	1″F	1 1/2″M	40–70	1,4	1	-

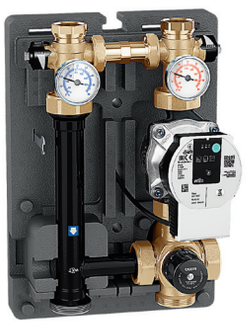

166

Thermostatic regulating unit **DN 25**, for **heating systems**.
Right - left convertible.
With insulation.

Maximum working pressure: 10 bar
Medium temperature range: 5–100 °C
Electric supply: 230 V AC
Main centre distance: 125 mm
Type of pump: Para 25-7

CE

Code	System side connection	Boiler side connection	Adjustment temperature (°C)	Flow rate avail. head 4 m w.g. (m^3/h)		
166600HE3	1″F	1 1/2″M	25–50	1,4	1	-

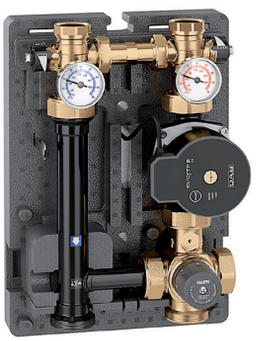

166

Thermostatic regulating unit **DN 25** for **heating systems**.
Right - Left convertible.
With insulation.

Maximum working pressure: 10 bar
Medium temperature range: 5–100 °C
Electric supply: 230 V AC
Main centre distance: 125 mm
Type of pump: EVOSTA2 70/130

CE

Code	System side connection	Boiler side connection	Adjustment temperature (°C)	Flow rate avail. head 4 m w.g. (m^3/h)		
166600HE5	1″F	1 1/2″M	25–50	1,4	1	-

DN 32



166

Thermostatic regulating unit **DN 32**, for **heating systems**.
Right - left convertible.
With insulation.

Maximum working pressure: 10 bar
Medium temperature range: 5–100 °C
Electric supply: 230 V AC
Main centre distance: 125 mm
Type of pump: UPML 25-105

CE

Code	System side connection	Boiler side connection	Adjustment temperature (°C)	Flow rate avail. head 4 m w.g. (m^3/h)		
166601UPM	1 1/4″F	1 1/2″M	25–50	2,4	1	-

Motorised regulating units

DN 25



167

Motorised regulating unit **DN 25**, for **heating and cooling systems**.
Right - left convertible.
Available with three-point control signal actuator (note A) or 0(2)–10V control signal and 0–10V feedback signal (note B).
Regulation with sector three-way valve.
With insulation.

Maximum working pressure: 10 bar
Medium temperature range: 5–100 °C
Main centre distance: 125 mm
Type of pump: UPM3K Auto 25-70

CE

Code	System side connection	Boiler side connection	Notes	Electric supply	Flow rate avail. head 4 m w.g. (m^3/h)		
167652HE1	1″F	1 1/2″M	**A**	230 V AC	1,4	1	-
167654HE1	1″F	1 1/2″M	**B**	24 V AC	1,4	1	-

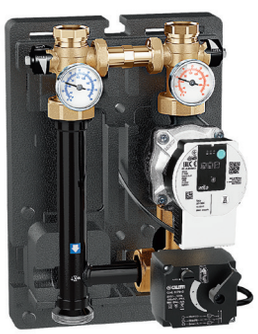

167

Motorised regulating unit **DN 25**, for **heating and cooling systems**.
Right - left convertible.
Available with three-point control signal actuator (note A) or 0(2)–10V control signal and 0–10V feedback signal (note B).
Regulation with three-way sector valve.
With insulation.

Maximum working pressure: 10 bar
Medium temperature range: 5–100 °C
Main centre distance: 125 mm
Type of pump: Para 25-7

CE

Code	System side connection	Boiler side connection	Notes	Electric supply	Flow rate avail. head 4 m w.g. (m^3/h)		
167652HE3	1″F	1 1/2″M	**A**	230 V AC	1,4	1	-
167654HE3	1″F	1 1/2″M	**B**	24 V AC	1,4	1	-

DN 32

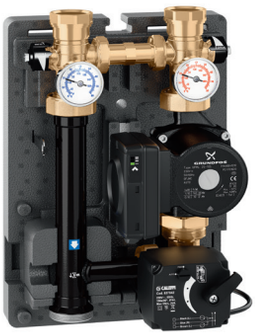

167

Motorised regulating unit **DN 32**, for **heating systems**.
Right - left convertible.
Available with three-point control signal actuator (note A) or 0(2)–10V control signal and 0–10V feedback signal (note B).
Regulation with three-way sector valve.
With insulation.

Maximum working pressure: 10 bar
Medium temperature range: 5–100 °C
Main centre distance: 125 mm
Type of pump: UPML 25-105

CE

Code	System side connection	Boiler side connection	Notes	Electric supply	Flow rate avail. head 4 m w.g. (m^3/h)		
167662HE2	1 1/4″F	1 1/2″M	**A**	230 V AC	3,7	1	-
167664HE2	1 1/4″F	1 1/2″M	**B**	24 V AC	3,7	1	-

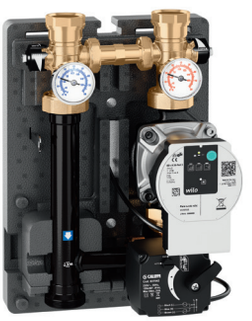

167

Motorised regulating unit **DN 32**, for **heating and cooling systems**.
Right - left convertible.
Available with three-point control signal actuator (note A) or 0(2)–10V control signal and 0–10V feedback signal (note B).
Regulation with three-way sector valve.
With insulation.

Maximum working pressure: 10 bar
Medium temperature range: 5–100 °C
Main centre distance: 125 mm
Type of pump: Para 25-9

CE

Code	System side connection	Boiler side connection	Notes	Electric supply	Flow rate avail. head 4 m w.g. (m^3/h)		
167662HE4	1 1/4″F	1 1/2″M	**A**	230 V AC	2,2	1	-
167664HE4	1 1/4″F	1 1/2″M	**B**	24 V AC	2,2	1	-

Note A: three-point control signal actuator.
Operating time: 150 s.
Can be combined with regulators code 161010 and 1520 series.

Note B: 0(2)–10 V control signal actuator.
Feedback signal: 0–10 V.
Operating time: 75 s.
Can be combined with regulator code 161010 (for actuator electic supply use 230V / 24V transformer).

Accessories for units



165

Hydraulic separator kit for units 165, 166 and 167 series, DN 25.

Code	Inlet connection	Outlet connection		
165010	1 1/2″F captive nut	1″F	1	-



519

Differential by-pass valve.

Maximum working pressure: 10 bar
Medium temperature range: 5–100 °C
Setting range: 1–6 m w.g.

Code	Connection		
519006	1″M	1	50



165

Pump anti-seizing electronic controller.

Electric supply: 230 V AC
Protection class: IP 54
Maximum current: 1 A

CE

Code		
165011	1	-



165

Pair of eccentric tailpieces for units 165, 166 and 167 series.

Main centre distance: 105-145 mm

Code	Connection 1	Connection 2		
165006	1″F	1 1/2″F captive nut	1	-



165

Sensor holder extension.
For 165, 166 and 167 series units.
Side connections: M4 F x M4 F x 1/8″ F x 1/4″ F.

Code	Connection 1	Connection 2		
165003	1″M	1″F captive nut	1	-



165

Female union with captive nut.
Complete with gasket.
For 165, 166 and 167 series units.

Code	Connection 1	Connection 2		
165002	1″F	1 1/2″F captive nut	1	-



165

Mounting bracket in stainless steel for units 165, 166 and 167 series.

Code		
165001	1	-



165

Safety thermostat kit for units 165, 166 and 167 series.
Complete with cable.
M4 connection.
Setting accuracy: ± 3

Protection class: IP 65

Code	Notes	Temperature setting (°C)		
165004	maximum safety thermostat	55	1	-
165007	minimum safety thermostat	10	1	-



166

Thermostatic mixing valve.
For 166 series units.

Maximum working pressure: 10 bar
Medium temperature range: 5–110 °C
Kv: 4,1 m^3/h

Code	System side connection	Connection	Mixed connection	DN	Adjustment temperature (°C)		
166001	1 1/2″ M	1 1/4″ M	1 1/2″ F captive nut	DN 20	25–50	1	-
166005	1 1/2″ M	1 1/4″ M	1 1/2″ F captive nut	DN 20	40–70	1	-



Three-way sector mixing valve, threaded.
For 167 series units.

Maximum working pressure: 10 bar
Medium temperature range: 5–110 °C
Nominal pressure: PN 10
△p max.: 1 bar
Material: brass

Code	Article use	Kv (m^3/h)		
F0001334	167652HE1, 167654HE1, 167652HE3, 167654HE3	6,3	1	-
F0001335	167662HE2, 167664HE2, 167662HE4, 167664HE4	10,0	1	-



6370

Actuator for sector mixing valve, **three-point control**.
For mixing valves codes 610 from 1/2″ to 2″ and for unit 167 series.
Actuator torque 5 N·m.

Ambient temperature range: 0–55 °C
Protection class: IP 44
Supply cable length: 1,5 m

CE

Code	Article use	Electric supply	Opening-Closing time		
637042	167652HE1, 167662HE2, 167652HE3, 167662HE4	230 V AC	150 s (90° rot.)	1	-



6370

Actuator for sector mixing valve, **proportional control**.
For mixing valves codes 610 from 1/2″ to 2″ and for unit 167 series.
Actuator torque 5 N·m.

Ambient temperature range: 0–55 °C
Protection class: IP 44
Supply cable length: 1,5 m
Control signal: 0 (2)–10 V, 0 (4)–20 mA, 0–5 V, 5–10 V

CE

Code	Article use	Electric supply	Opening-Closing time		
637044	167654HE1, 167664HE2, 167654HE3, 167664HE4	24 V AC	75 s (90° rot.)	1	-

Temperature regulators



161

Digital regulator with synoptic diagram **for heating and cooling**.
Complete with immersion flow probes with pocket and Pt1000 Ø 6 mm return probe (pocket to be chosen according to the pipe, see accessories).
Optional climatic probe.

Adjustment temperature range: 5–95 °C
Electric supply: 230 V AC
Protection class: IP 20
Probe/cable length: 1,5 m
Control signal: 3 point, 0–10 V

CE

Code		
161010	1	-

3-point control 230 V AC.
0-10 V control 24 V AC with separate power supply.



1520

Outside compensated digital temperature regulator, **only for heating**.
Complete with contact flow probe and outside probe.

Adjustment temperature range: 20–90 °C
Electric supply: 230 V AC
Protection class: IP 40
Control signal: 3 point

CE

Code	Notes		
152001	1 channel	1	-
152002	2 channels	1	-
152003	3 channels	1	-



1520

Digital temperature controller **for heating and cooling**.
Complete with flow probe, outside probe and max. relative humidity probe.

Electric supply: 230 V AC
Running power consumption: 5,5 VA
Protection class: IP 40
Control signal: 3 point

CE

Code	Notes		
152021	1 channel	1	-

Accessories



161
Outside temperature probe.

Code		
161002	1	-



161
Pressure safety switch.
Complete with cable for wiring.

Medium temperature range: 5–100 °C
Supply cable length: 1 m
Adjustment pressure range: 0,5–10 bar

Code		
161003	1	-



161
Dew point detector.

Working range (humidity) UR: 30–100 %

Code		
161004	1	-



161
Remote regulator.
Functions:
- translation of the setting curves, from +15 K to -15 K;
- maximum temperature;
- position OFF.

Code		
161005	1	-



161
Pt1000 probe, Ø6 mm.

Code	Notes	Article use		
161006	L 45 mm, L cable 2,5 m	161010	1	-
161015	L 20 mm, L cable 1,5 m	161010	1	-

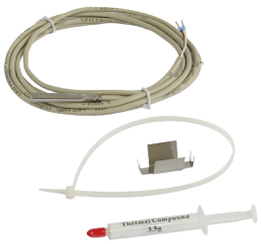

161
Pt1000 contact probe for pipes, Ø 6 mm.

Code	Notes	Article use		
161012	L cable 2,5 m	161010	1	-



161
Pt1000 probe pocket, size 1/2" M.

Code	Notes	Article use		
161013	L 60 mm	161010	1	-
161014	L 100 mm	161010, 150006, 257006	1	-



161
Centralised probe for regulator 161 series.

CE

Code		
161020	1	-

COMPONENTS FOR HEAT PUMP SYSTEMS

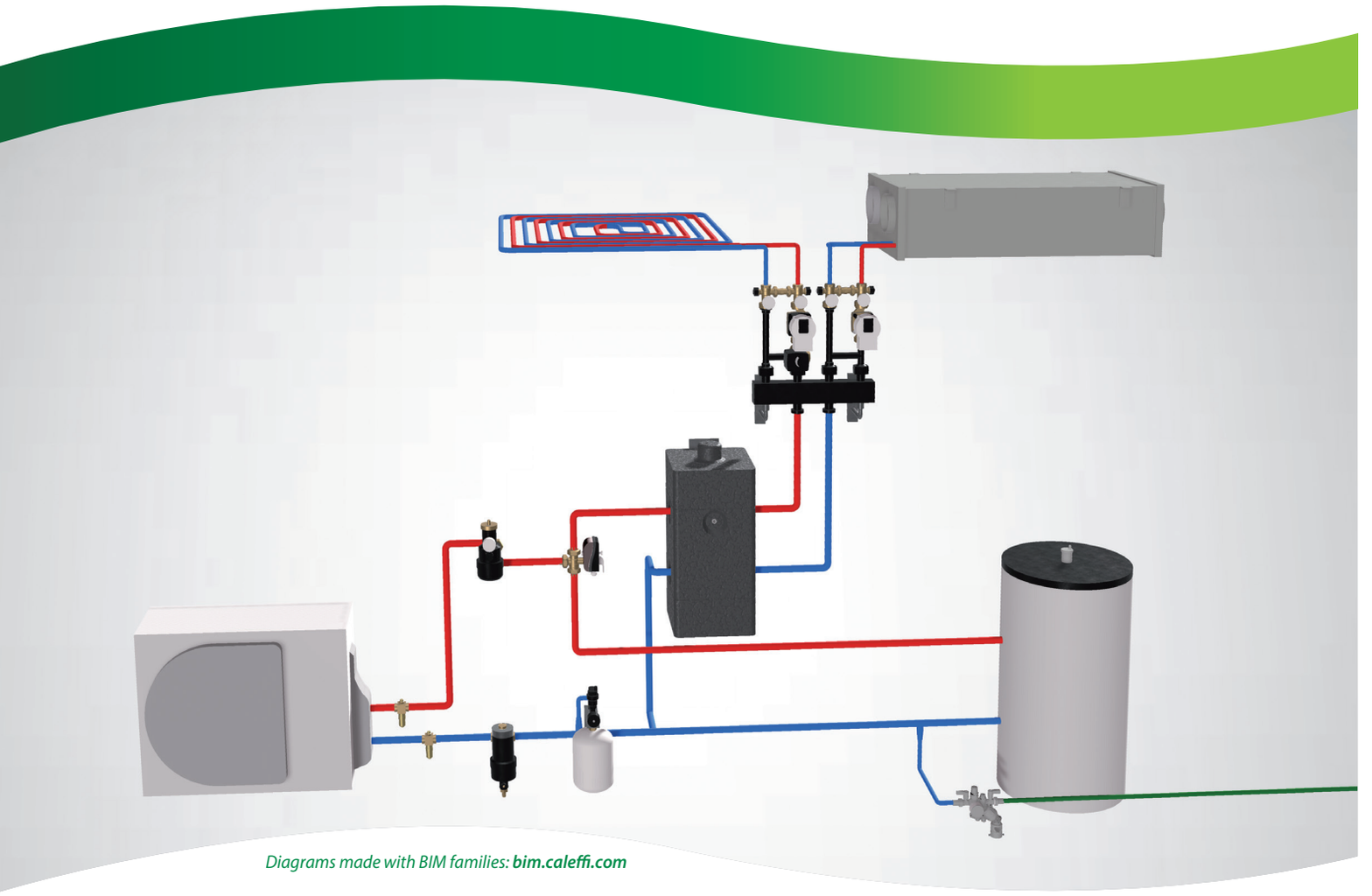

Diagrams made with BIM families: ***bim.caleffi.com***

Antifreeze valve
Antifreeze valve with air sensor
Buffer tank - hydraulic separator
Technopolymer magnetic filters dirt separators
High-efficiency deaerator for heat pump systems
Technopolymer instrument holder
Diverting valves for heat pump systems
Differential by-pass valve
Changeover and distribution unit radiant panel / fan-coil system

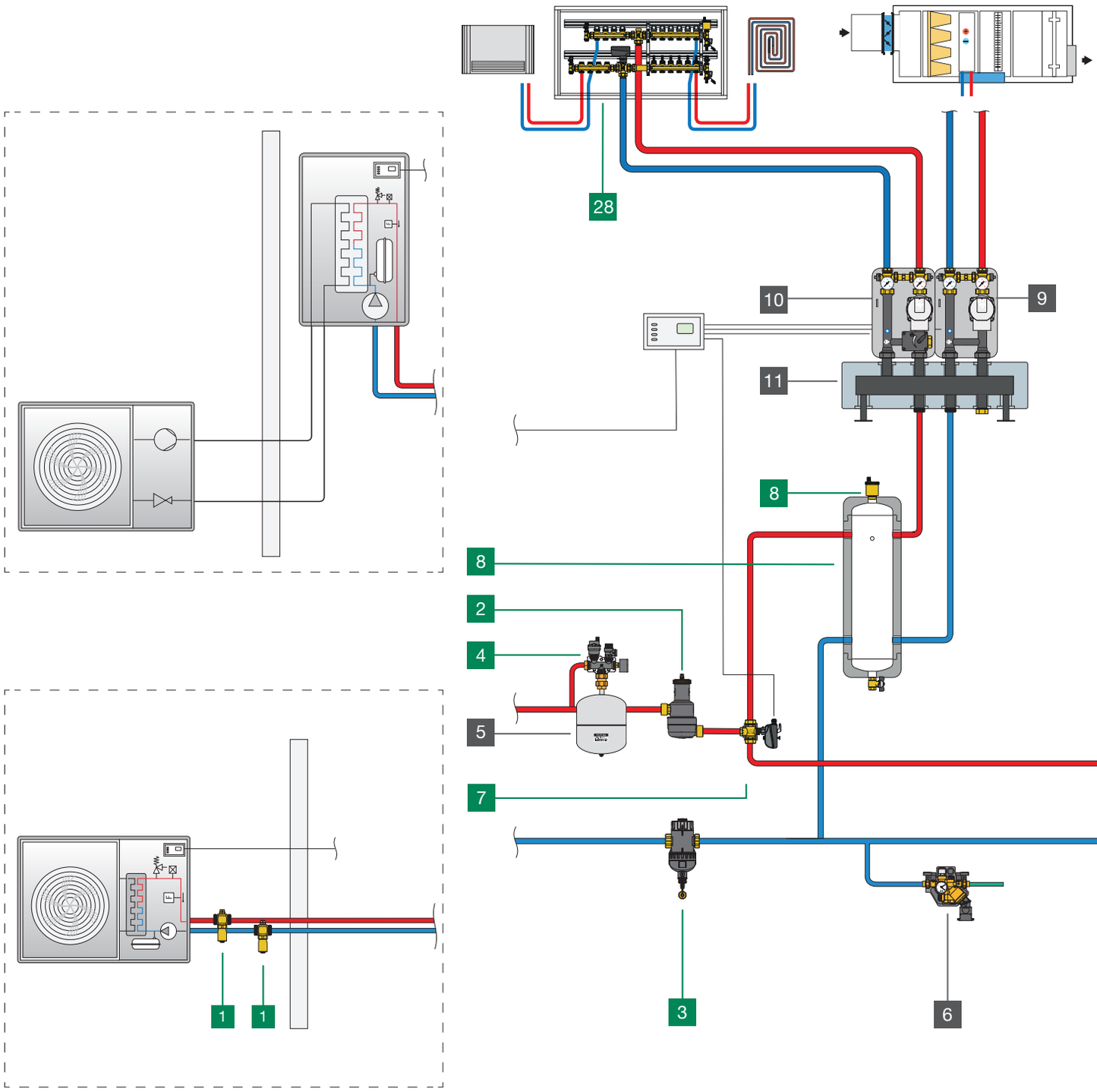
28
10
9
11
8
8
2
4
5
7
1
1
3
6

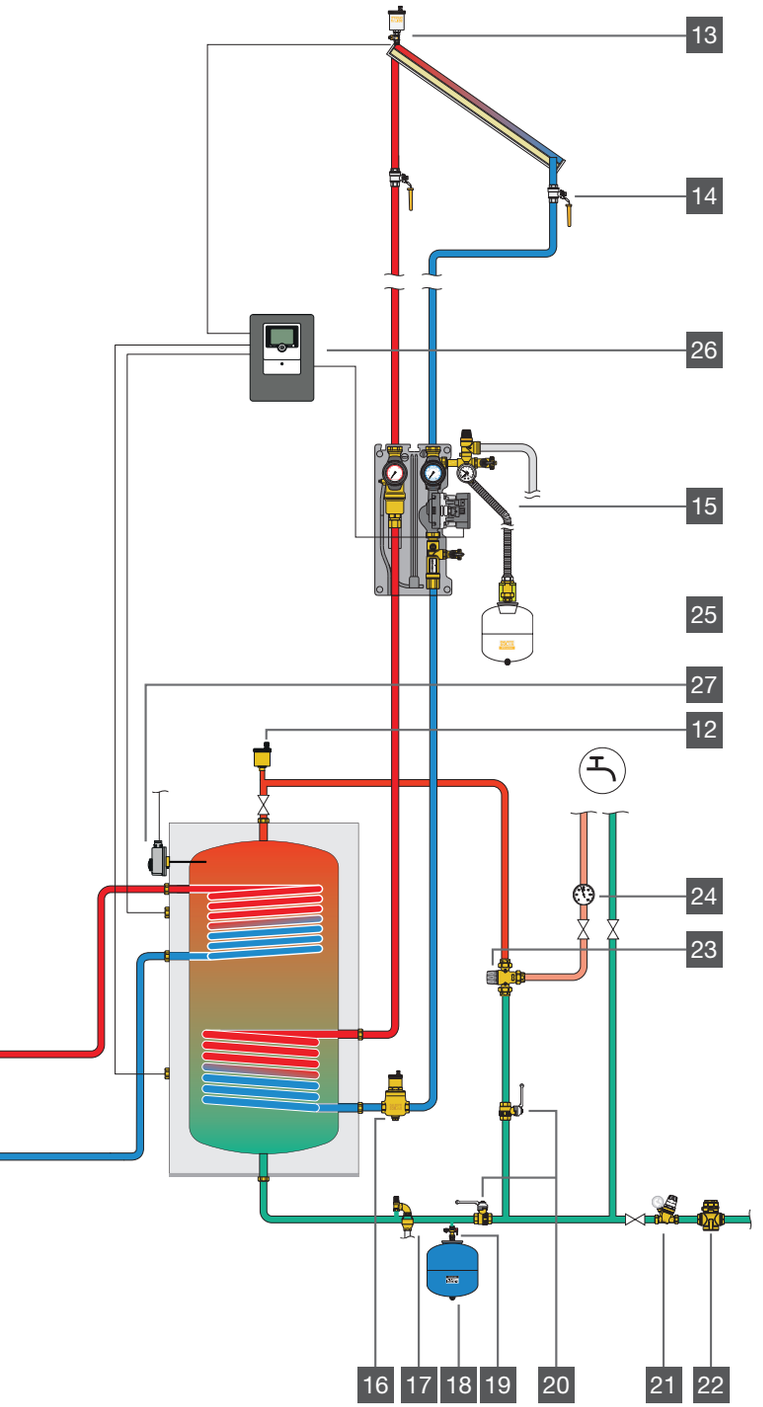

1	Series 108	Antifreeze valve
2	Series 5516	High-efficiency deaerator CALEFFI HED®
3	Series 577	CALEFFI XF semi-automatic self-cleaning magnetic filter
4	Series 305	Technopolymer instrument holder manifold
5	Series 556	Welded expansion vessel for heating systems
6	Series 580	Automatic compact filling unit with BA type backflow preventer, shut-off valves, strainer, pressure test ports, pressure reducing valve
7	Series 638	3-way motorised ball valve
8	Series 5485	Buffer tank for heat pump systems
9	Series 165	Direct supply unit
10	Series 167	Motorised regulating unit
11	Series 550	Manifold for central heating system
12	Series 5020	MINICAL® automatic air vent
13	Series 250	Automatic air vent for solar thermal systems, complete with shut-off cock
14	Series 240	Ball valve for solar thermal systems
15	Series 279	Circulation unit for solar heating systems
16	Series 251	Deaerator for solar heating systems
17	Series 531	Safety relief valve for domestic water systems
18	Series 568	Welded expansion vessel for domestic systems
19	Series 5580	Shut-off ball valve for expansion vessels, with drain cock
20	Series 3230	Ball valve with check valve
21	Series 5350	Pressure reducing valve
22	Series 5771	Inspectable strainer with shut-off function
23	Series 5231	Adjustable thermostatic mixing valve
24	Series 688	Temperature gauge
25	Series 259	Welded expansion vessel for solar thermal systems
26	Series 278	DeltaSol® SLL digital regulator
27	Series 622	Immersion thermostat, adjustable
28	Series 664	Changeover and distribution unit radiant panel/fan-coil system

Caleffi S.p.A. declines any responsibility deriving from improper use of the data provided in this document. This document should not be considered as a replacement for the technical heating design.

TABLE FOR SIZING COMPONENTS FOR HEAT PUMP SYSTEMS

Nominal power HP [kW]		3	4	5	6	7	8	9	10	11	12	14	16	18	22	25
Max. set flow rate [l/h] (ΔT = 5 °C)		516	688	860	1.032	1.204	1.376	1.548	1.720	1.892	2.064	2.408	2.752	3.096	3.784	4.300
Nominal pipe diameter*		3/4"	3/4"	1"	1"	1"	1"	1"	1"	1 1/4"	1 1/4"	1 1/4"	1 1/4"	1 1/2"	1 1/2"	1 1/2"
iStop®		**108**202 (Ø 22)								**108**302 (Ø 28)				-		
		**108**602 (1")								**108**702 (1 1/4")				**108**802 (1 1/2")		
		**108**622 (1")								-						
		**108**612 (1")								**108**712 (1 1/4")						
iStop®PLUS		**108**322 (Ø 28)												-		
		**108**632/**108**642 (1")								**108**732 (1 1/4")				-		
CALEFFI XF**		**577**200 (Ø 22)			**577**300 (Ø 28)					-						
		**577**500 (3/4")			**577**600 (1")					**577**700 (1 1/4")				**577**800 (1 1/2")		
CALEFFI HED®		**551**602 (Ø 22)								**551**603 (Ø 28)				-		
		**551**606 (1")								**551**607/**551**617 (1 1/4")				-		

** Pipe pressure drop r ~ 20-22 mm w.g./m (50 °C)*

*** With clean filter*

TABLE FOR SIZING COMPONENTS FOR HEAT PUMP SYSTEMS

Nominal power HP [kW]		3	4	5	6	7	8	9	10	11	12	14	16	18	22	25
Max. set flow rate [l/h] (ΔT = 5 °C)		516	688	860	1.032	1.204	1.376	1.548	1.720	1.892	2.064	2.408	2.752	3.096	3.784	4.300
Nominal pipe diameter*		3/4"	3/4"	1"	1"	1"	1"	1"	1"	1 1/4"	1 1/4"	1 1/4"	1 1/4"	1 1/2"	1 1/2"	1 1/2"
5485		**5485**20		**5485**25				**5485**30				**5485**50				
		**5485**51														
6445		**6445**62/66								-						
638		-								**638**373				**638**383		
6400		**6400**62/66										-				
519		**519**500 (3/4", 1–6 m w.g.) - **519**504 (3/4", 10–40 m w.g.)														
518		**518**015 (3/4", 1–6 m w.g.)													-	
		**518**002 (Ø22, 1–6 m w.g.)													-	
		**518**500 (3/4", 1–6 m w.g.)													-	
580		**580**011													-	

** Pipe pressure drop r ~ 20-22 mm w.g./m (50 °C)*

COMPONENTS FOR HEAT PUMP SYSTEMSCOMPONENTS FOR HEAT PUMP SYSTEMS

Antifreeze valve



108 iStop®

Antifreeze valve.
PATENT PENDING

Maximum working pressure: 10 bar
Medium temperature range: 0–90 °C
Ambient temperature range: -30–60 °C
Opening temperature: 3 °C
Closing temperature: 4 °C
Material: brass

Code	Connection		
108602	1″ M	1	25
108702	1 1/4″ M	1	20
108802	1 1/2″ M	1	20
108202	Ø 22	1	20
108302	Ø 28	1	20



108 iStop®

Antifreeze valve.
PATENT PENDING

Maximum working pressure: 10 bar
Medium temperature range: 0–90 °C
Ambient temperature range: -30–60 °C
Opening temperature: 3 °C
Closing temperature: 4 °C
Material: brass

Code	Connection 1	Connection 2		
108642	1″ F captive nut	1″ F captive nut	1	25
108632	1″ F captive nut	1″ M	1	25
108732	1 1/4″ F captive nut	1 1/4″ M	1	20



108 iStop®PLUS

Compact antifreeze valve.
PATENT PENDING

Material: brass
Maximum working pressure: 10 bar
Medium temperature range: 0–90 °C
Ambient temperature range: -30–60 °C
Opening temperature: 3 °C
Closing temperature: 4 °C

Code	Connection		
108622	1″ M	1	25
108322	Ø 28	1	20



Protective cover for 108 series antifreeze valves.

Code	Article use		
F0002553	108602, 108202, 108302, 108632, 108642	1	20

Antifreeze valve with air sensor



108 iStop® NEW

Antifreeze valve with air sensor.
Enabling of antifreeze function with outside air temperature < 5 °C.
Antifreeze function (water sensor).
PATENT PENDING

Maximum working pressure: 5 bar
Medium temperature range: 0–90 °C
Ambient temperature range: -30–60 °C
Opening temperature: 3 °C
Closing temperature: 4 °C
Material: brass

Code	Connection		
108612	1″ M	1	10
108712	1 1/4″ M	1	10

Application diagrams of antifreeze valve 108 series

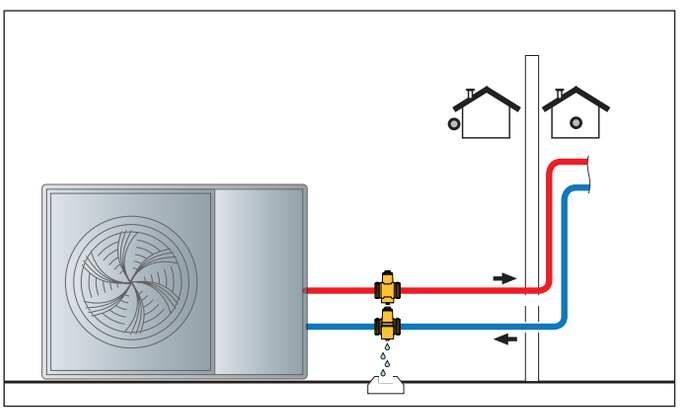

Buffer tank - hydraulic separator



5485

Wall-mounted inertial hydraulic separator
for heat pump systems.
With insulation.

Maximum working pressure: 4 bar
Medium temperature range: -10–95 °C
Medium: water, glycol solutions
Maximum percentage of glycol: 30 %
Material: stainless steel

Code	Connection	Max. recommended flow rate (m^3/h)	Volume (l)		
548515	1″F	3,5	15	1	-
548520	1″F	3,5	20	1	-
548525	1″F	3,5	25	1	-
548530	1″F	3,5	30	1	-
548550	1 1/4″F	5,5	50	1	-

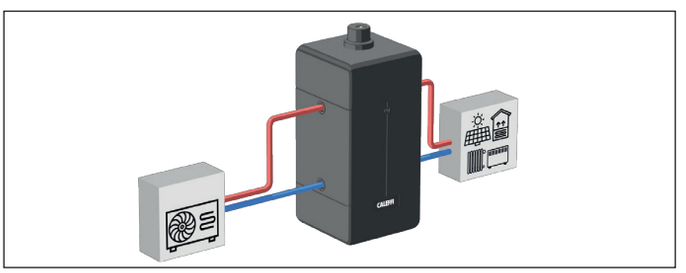

Sizing

The hydraulic separator should be sized in accordance with the maximum recommended flow rate value at the inlet. The selected value should be the sum of the primary circuit flow rates or the sum of the secondary circuit flow rates, whichever is greater.
On the other hand, the inertial hydraulic separator volume depends on the minimum volume of water required by the heat pump manufacturer to guarantee proper machine operation even in defrosting phases. Generally, with more modern heat pumps, it can assume an average value calculated on the basis of the machine power, which varies from 2,5 to 3,5 litres/kWt.

Volume	Connections	Max flow rate	Nominal power HP
15 l	1″	3,5 m^3/h	3–5 kWt
20 l	1″	3,5 m^3/h	
25 l	1″	3,5 m^3/h	6–8 kWt
30 l	1″	3,5 m^3/h	9–12 kWt
50 l	1 1/4″	5,5 m^3/h	13–25 kWt

Energy class

The 5485 series is designed for high energy efficiency.

Low losses ensure the buffer tank-hydraulic separator is in the best energy efficiency classes.

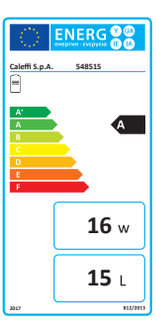



5485

Wall-mounted inertial hydraulic separator
for hybrid systems.
With insulation.

Maximum working pressure: 4 bar
Medium temperature range: -10–95 °C
Medium: water, glycol solutions
Maximum percentage of glycol: 30 %
Material: stainless steel

Code	Connection	Volume (l)		
548551	1 1/4″F	50	1	-

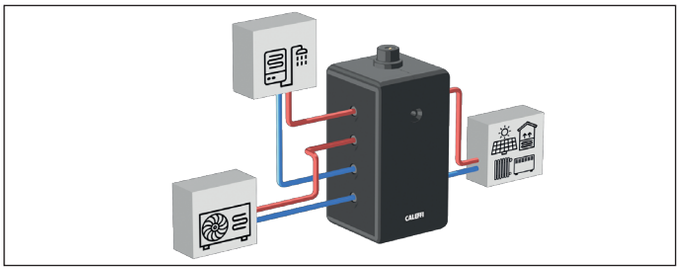

		Reg. UE N. 812/2013 All. IV.2.1		
Code	**Volume [litres]**	**Useful volume [litres]**	**Energy class [ErP]**	**Dispersion [W]**
548515	15	15	A	16
548520	20	20	A	20
548525	25	25	A	22
548530	30	30	B	28
548550	50	49	A	27
548551	50	49	A	27



5020 MINICAL®

Automatic air vent.
With hygroscopic safety cap.
With insulation.

Maximum working pressure: 10 bar
Maximum air discharge pressure: 2,5 bar
Medium temperature range: 0–120 °C
Material: brass

WRAS APPROVED PRODUCT CERTIFICATION MARK

Code	Connection		
502067	1″M	1	-



Fitting for code 548550.

Code	Connection 1	Connection 2		
F0001878	1″F	1 1/4″M	1	-

Technopolymer magnetic filters dirt separators



577
CALEFFI XF

Semi-automatic self-cleaning magnetic filter.
Adjustable for horizontal and vertical pipes.
Drain cock with hose connection.
PATENT PENDING

Maximum working pressure: 3 bar
Medium temperature range: 0–90 °C
Strainer mesh size Ø: 0,16 mm
Material: technopolymer

Code	Connection		
577500	3/4″ F	1	-
577600	1″ F	1	-
577700	1 1/4″ F	1	-
577200	Ø 22	1	-
577300	Ø 28	1	-



577
CALEFFI XF

Semi-automatic self-cleaning magnetic filter.
Adjustable for horizontal and vertical pipes.
Drain cock with hose connection.
Complete with by-pass.
PATENT PENDING

Maximum working pressure: 3 bar
Medium temperature range: 0–90 °C
Strainer mesh size Ø: 0,16 mm
Material: technopolymer

Code	Connection		
577800	1 1/2″ F	1	-
577900	2″ F	1	-



577

Insulation for semi-automatic self-cleaning magnetic filter.

Code	Article use		
CBN577500	577200, 577300, 577500, 577600, 577700	1	-
CBN577800	577800, 577900	1	-

Application diagram CALEFFI XF

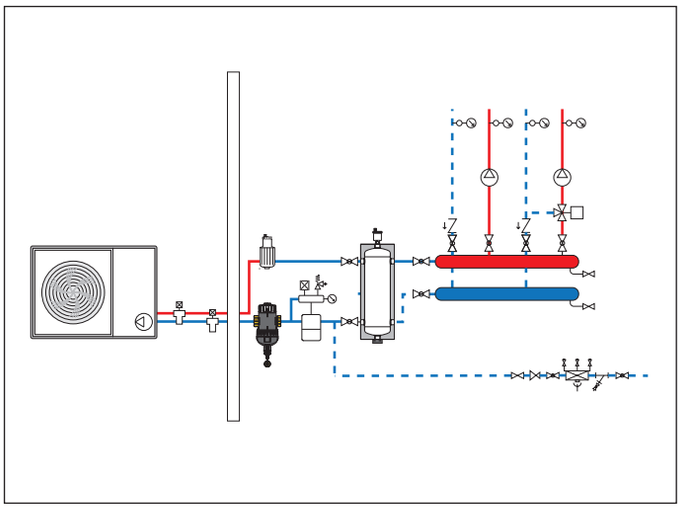

Cleaning the filter mesh

To clean the CALEFFI XF filter with the circulator stationary, there is no need to disassemble the component because it contains a mechanism with brushes to clean the filter mesh.

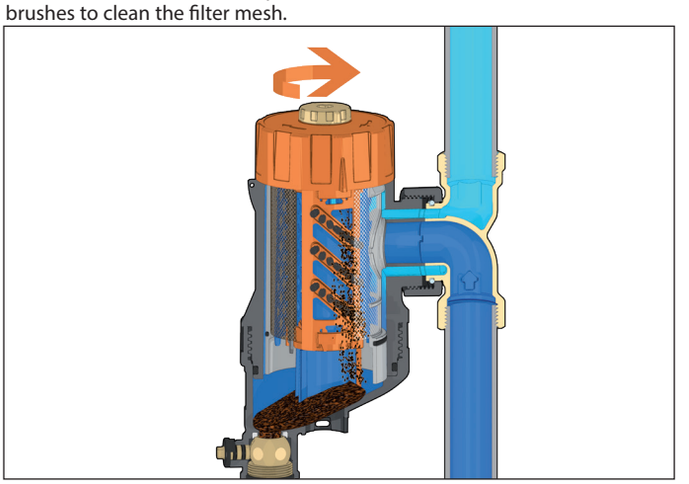

High-efficiency deaerator for heat pump systems



5516
CALEFFI HED®

High-efficiency deaerator.
Adjustable for horizontal and vertical pipes with angled configuration.
With hygroscopic safety cap.
PATENT PENDING

Maximum working pressure: 3 bar
Medium temperature range: 0–90 °C
Medium: water
Material: technopolymer

Code	Connection		
551606	1″F	1	-
551607	1 1/4″F	1	-
551617	1 1/4″M	1	-
551602	Ø 22	1	-
551603	Ø 28	1	-



5516

Insulation for high-efficiency deaerators.

Code	Article use		
CBN551602	551602, 551603, 551606, 551607, 551617	1	8



Pressure gauge for high-efficiency deareator, 5516 series.

Code	Pressure gauge scale (bar)	Ø (mm)		
F0002253	0–4	50	1	-

Application diagram CALEFFI HED

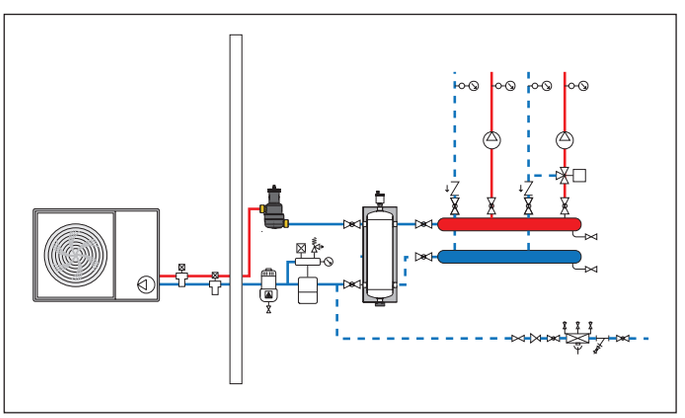

Technopolymer instrument holder



305

Instrument holder in technopolymer material for heating systems.
Complete with:
- air vent;
- safety relief valve in technopolymer material;
- pressure gauge.

With insulation.

Medium temperature range: 5–90 °C
Maximum discharge rating: 50 kW

Code	Connection	Notes	Pressure setting (bar)		
305663	1″F	safety valve TÜV certified	3	1	5

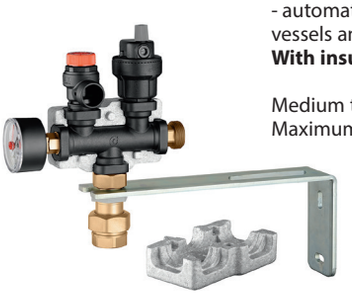

305

Instrument holder kit in technopolymer material for heating systems.
Complete with:
- air vent;
- safety relief valve in technopolymer material;
- pressure gauge;
- automatic shut-off cock for expansion vessels and fixing brackets.

With insulation.

Medium temperature range: 5–90 °C
Maximum discharge rating: 50 kW

Code	Connection	Notes	Pressure setting (bar)		
305503	3/4″F	safety valve TÜV certified	3	1	10



305

Instrument holder in technopolymer material for heating systems.
Complete with:
- air vent in technopolymer material;
- safety relief valve;
- pressure gauge.

With insulation.

Medium temperature range: 5–90 °C
Maximum discharge rating: 50 kW
Material: technopolymer

Code	Connection	Notes	Pressure setting (bar)		
305671	1″F	-	1,8	1	5
305673	1″F	safety valve NF certified	3	1	5
305674	1″F	without insulation	4	1	5

Diverting valves for heat pump systems



6445

Motorised three-way diverting ball valve.
Complete with **three-point control** actuator, insulation and anti-condensation spacer.
With insulation.
With auxiliary microswitch.

Maximum working pressure: 10 bar
Medium temperature range: -5–110 °C
Ambient temperature range: 0–55 °C
△p max.: 10 bar
Protection class: IP 54
Supply cable length: 1 m

Code	Connection	Electric supply	Kv (m^3/h)	Opening-Closing time		
644562	1″ M	230 V AC	9	40 s (90° rot.)	1	6
644566	1″ M	230 V AC	9	10 s (90° rot.)	1	6



6445

Motorised three-way diverting ball valve.
Complete with three-point control actuator.
With auxiliary microswitch.

Maximum working pressure: 10 bar
Medium temperature range: -5–110 °C
Ambient temperature range: 0–55 °C
Protection class: IP 54
Contact rating (230 V): 0,8 A

Code	Connection	Electric supply	Kv (m^3/h)	Opening-Closing time		
644553	3/4″ M	230 V AC	7,7	40 s (90° rot.)	1	5
644557	3/4″ M	230 V AC	7,7	10 s (90° rot.)	1	5
644563	1″ M	230 V AC	9	40 s (90° rot.)	1	5
644567	1″ M	230 V AC	9	10 s (90° rot.)	1	5



6445

Insulation kit for use in heating and cooling systems.
For 6445 series three-way motorised valves.

Code	Article use		
CBN644553	644553, 644557, 644563, 644567	1	10



6400

Motorised three-way diverting ball valve with integrated by-pass.
Complete with **three-point control** actuator, insulation and anti-condensation spacer.
With auxiliary microswitch.

Maximum working pressure: 10 bar
Medium temperature range: 0–100 °C
Maximum percentage of glycol: 30 %
Ambient temperature range: 0–55 °C
Protection class: IP 54
Setting range: 1–6 m w.g.

Code	Connection	Secondary connection	Electric supply	Kv (m^3/h)	Opening-Closing time		
640062	1″ F	3/4″ M	230 V AC	9	40 s (90° rot.)	1	6
640066	1″ F	3/4″ M	230 V AC	9	10 s (90° rot.)	1	6



6440

Spare **three-point control** actuator for motorised ball zone valves 6445 series.

Ambient temperature range: 0–55 °C
Protection class: IP 54
Supply cable length: 1 m

Code	Electric supply	Opening-Closing time		
644022	230 V AC	40 s (90° rot.)	1	10
644032	230 V AC	10 s (90° rot.)	1	10

Application diagram for diverter valves with integrated by-pass, for heat pumps

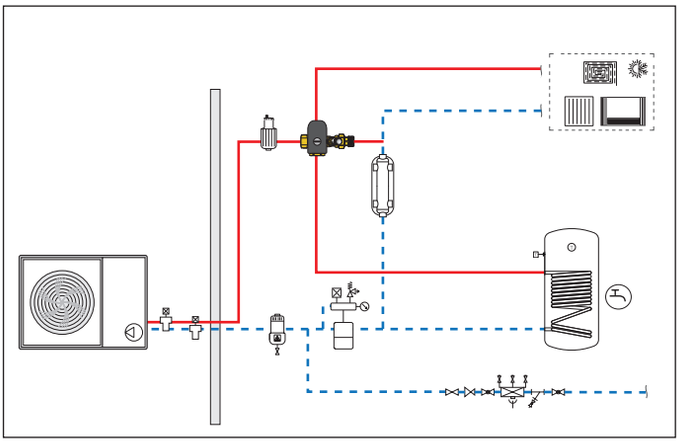



638

Motorised three-way diverting ball valve, for heating and conditioning systems.
Complete with **three-point control** actuator.
With insulation.
With auxiliary microswitch.

Maximum working pressure: 16 bar
Medium temperature range: -10–110 °C
Ambient temperature range: -10–55 °C
△p max.: 10 bar
Protection class: IP 65
Contact rating (230 V): 6 (2) A

Code	Connection	Electric supply	Kv (m^3/h)	Opening-Closing time		
638373	1 1/4″ M	230 V AC	24,7	50 s (90° rotation)	1	-
638383	1 1/2″ M	230 V AC	47	50 s (90° rotation)	1	-



638

Spare **three-point control** actuators for motorised two and three-way valves, “T” drilling version 638 series.

Ambient temperature range: -10–55 °C
Protection class: IP 54
Supply cable length: 1 m

Code	Electric supply	Opening-Closing time		
638012	230 V AC	50 s (90° rotation)	1	-
638014	24 V AC	50 s (90° rotation)	1	-

Differential by-pass valve



519

Differential by-pass valve, adjustable with graduated scale.

Maximum working pressure: 10 bar
Medium temperature range: 0–110 °C
Medium: water, glycol solutions
Maximum percentage of glycol: 30 %

Code	Inlet connection	Outlet connection	Setting range (m w.g.)		
519500	3/4″ F	3/4″ M	1–6	1	50
519504	3/4″ F	3/4″ M	10–40	1	50
519700	1 1/4″ F	1 1/4″ M	1–6	1	10
519703	1 1/4″ F	1 1/4″ M	5–25	1	10
519002	Ø 22	Ø 22	1–6	1	50



518

Differential by-pass valve, adjustable with graduated scale.

Maximum working pressure: 10 bar
Medium temperature range: 0–100 °C
Medium: water, glycol solutions
Maximum percentage of glycol: 30 %

Code	Connection	Setting range (m w.g.)		
518015	3/4″ M	1–6	1	25



518

Differential by-pass valve, adjustable with graduated scale.

Maximum working pressure: 10 bar
Medium temperature range: 0–100 °C
Maximum percentage of glycol: 30 %
Medium: water, glycol solutions

Code	Inlet connection	Outlet connection	Setting range (m w.g.)		
518500	3/4″ F	3/4″ M	1–6	1	25
518002	Ø 22	Ø 22	1–6	1	25
518012	Ø 22	Ø 22	3–10	1	25

Application diagram for differential by-pass valve

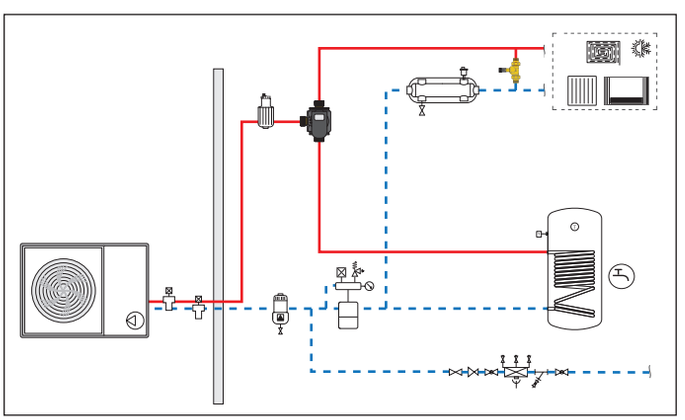

Changeover and distribution unit radiant panel / fan-coil system

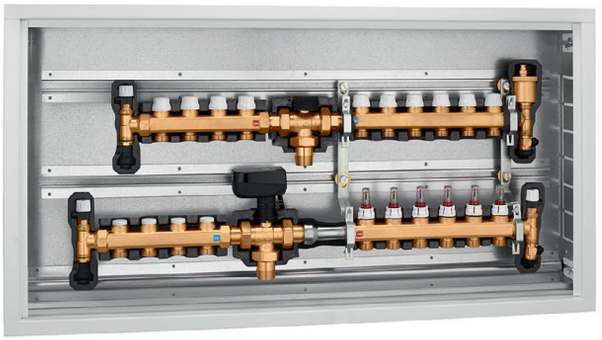

664

Changeover and distribution unit pre-assembled in box for radiant panel/ fan-coil systems.
Complete with:
- distribution manifold for radiant panel systems with flow meters and shut-off valves, insulated,
- distribution manifold for fan-coil systems with lockshield valves for preset flow rate and shut-off valves, insulated,
- three-way diverter valve with three-point control, complete with insulation and anti-condensation spacer,
- check valve kit,
- box with adjustable depth 110 - 140 mm.
With insulation.

Maximum working pressure: 6 bar
Medium temperature range: 5–60 °C
Electric supply: 230 V AC
Outlet centre distance: 50 mm

Winter

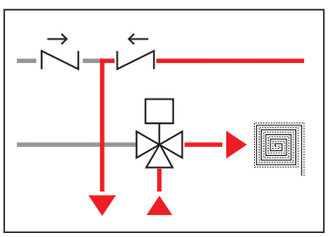

Summer

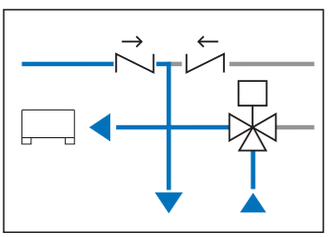

Code	Main connection	Outlet connection to radiant panels	Outlet connection to fancoil		
6640F1	1" M	3/4" M - 6 out.	3/4" M - 4 out.	1	-
6640G1	1" M	3/4" M - 7 out.	3/4" M - 4 out.	1	-
6640H1	1" M	3/4" M - 8 out.	3/4" M - 4 out.	1	-
6640I1	1" M	3/4" M - 9 out.	3/4" M - 4 out.	1	-
6640L1	1" M	3/4" M - 10 out.	3/4" M - 4 out.	1	-
6640M1	1" M	3/4" M - 11 out.	3/4" M - 4 out.	1	-

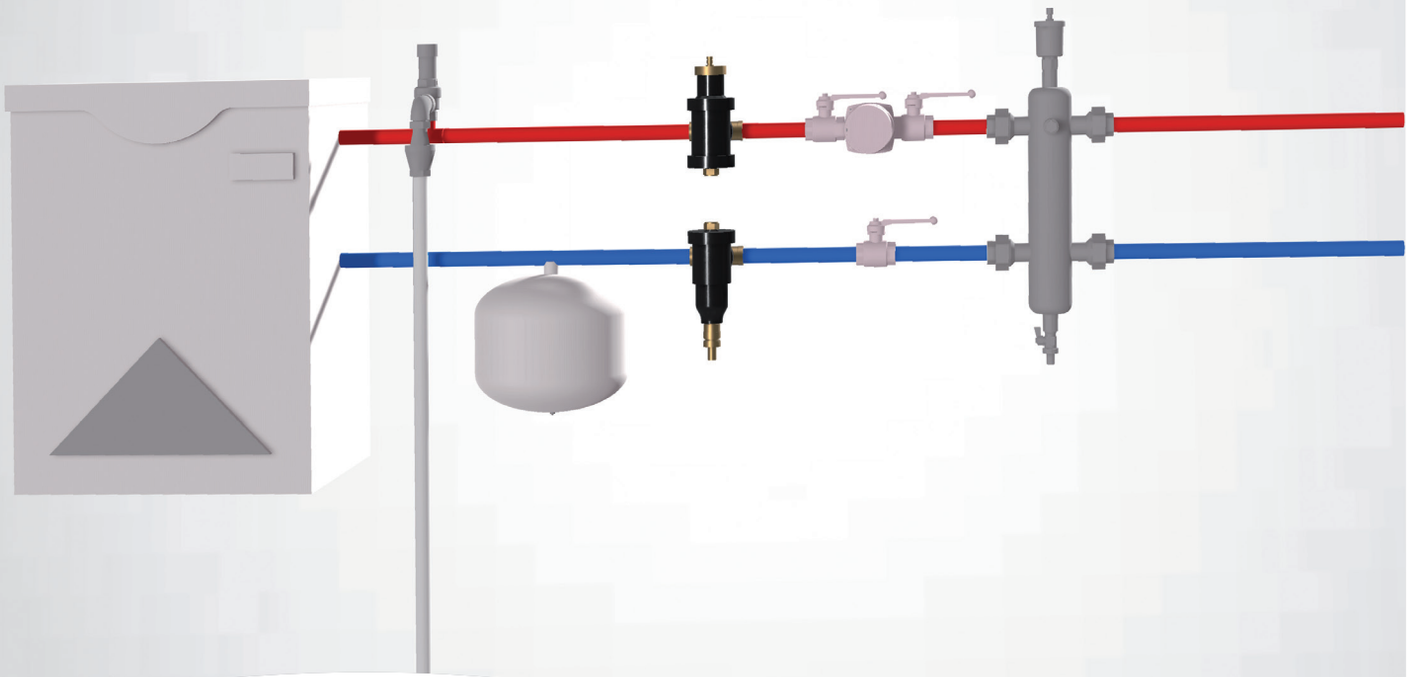

Diagrams made with BIM families: **bim.caleffi.com**

Dirt separators for wall-hanging boiler systems
Dirt separators for heat pump systems
Dirt separators for boiler systems or chiller, with technical room
Self-cleaning device for systems
Automatic air vents
Air vents for radiators
Deaerators
Deaerators-dirt separators
Domestic hot water treatment
Water treatment

AIR AND DIRT IN HEATING AND COOLING SYSTEMS

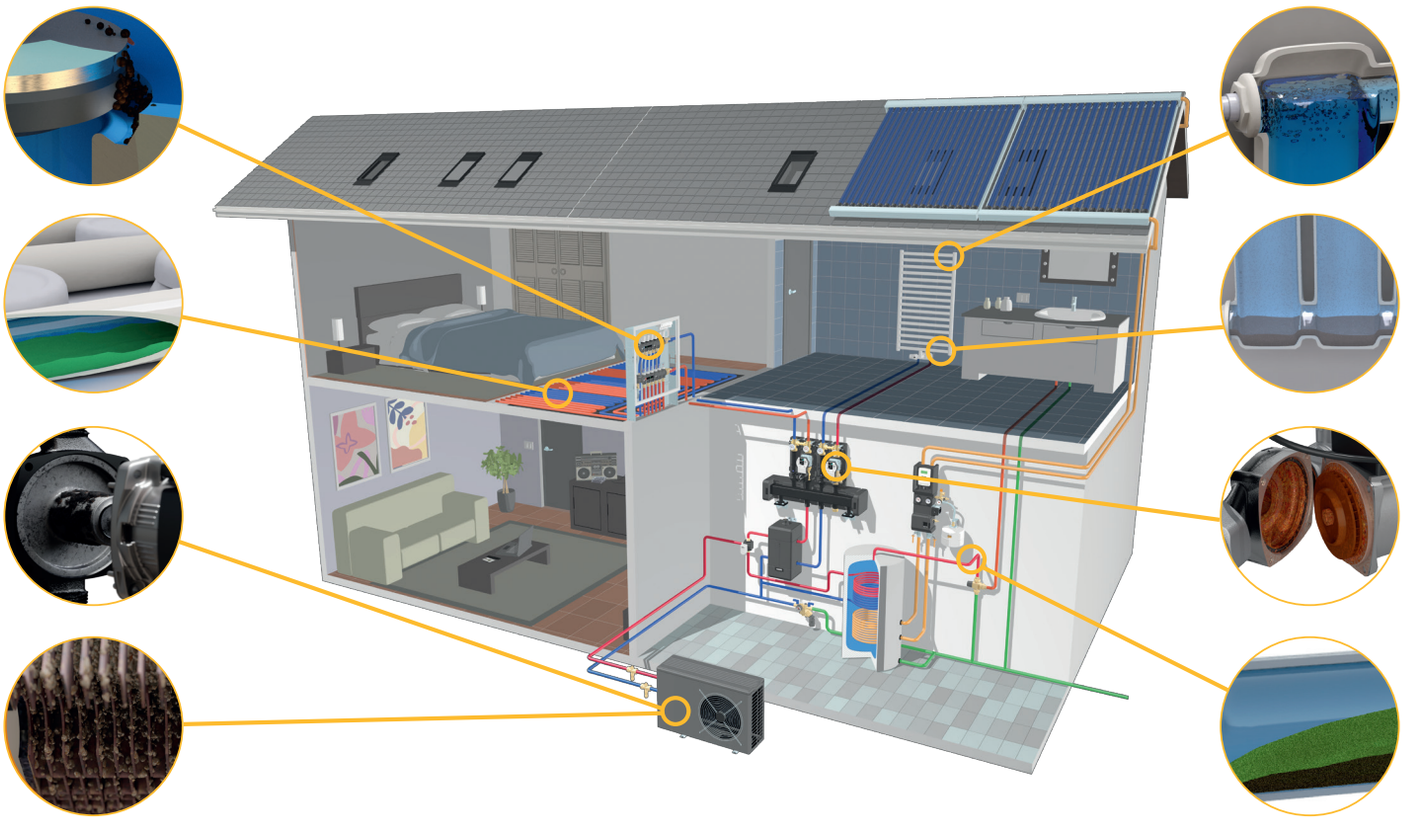

Problems linked to the presence of dirt

The impurities contained in the water of the hydronic circuits can cause a series of problems that should not be underestimated.

Corrosion due to differential aeration
This is due to the fact that, in the presence of water, a layer of scale on a metal surface leads to the formation of two zones (water/impurities and impurities/metal) with a different oxygen content; for this reason, localised batteries are activated with current flows that lead to corrosion of the metal surfaces.

Irregular operation of the valves
This is due to impurities, which can adhere stubbornly to the valve seats and cause deformities in regulation and leaks, for example in balancing valves.

Pumps blocking and seizing
These problems may be suspended particles circulating through the pumps which can build up inside them, due to both the particular geometry of the pumps and to the effect of the magnetic fields generated by the pumps themselves.

Lower efficiency of the heat exchangers
Deposits and scale build-up can significantly reduce both the flow rates of the fluids and the heat exchanging surfaces.

Problems linked to the presence of air

The problems caused by air contained in hydronic systems can be serious and unpleasant both for the users and for the professionals who service the system. If these problems are not analysed thoroughly, they can often lead to solutions that are not decisive in the long term.
Initially it is very important to identify the phenomena that the air in the system can provoke.

Noise in the pipes and in the terminals
The air contained in the system makes noise in the pipes and the adjustment devices. This is much more evident during system startup, i.e. when the flow begins to flow through the pipes.

Insufficient flow rates, complete circulation blockages and insufficient heat exchange between the emission terminals and the room
Circulation can be partially or totally blocked by air bubbles present in some points in the system. This phenomenon is particularly serious for radiant panel systems, but can also cause thermal imbalances and lower radiator or fan coil efficiency.

Corrosion of the system
This is provoked by the oxygen present in the air and can lead to the weakening but also the breakage of components such as pipes, radiators and boiler heat exchangers.

Cavitation
This may compromise durability and operation, especially of the pumps and regulating valves.

WALL-HANGING BOILER SYSTEMS

MAGNETIC FILTERS

ANGLED INSTALLATION



CALEFFI XS®
5459
3/4" M x 3/4" F captive nut

IN-LINE INSTALLATION



CALEFFI XS®
5459
3/4" M x 3/4" F captive nut

DIRT SEPARATOR IN TECHNOPOLYMER WITH MAGNET AND FILTER

UNIVERSAL INSTALLATION



DIRTMAG*MINI*®
5450
3/4" M x 3/4" F captive nut
Ø22

HEAT PUMP SYSTEMS

TECHNOPOLYMER MAGNETIC FILTERS DIRT SEPARATORS

SEMI-AUTOMATIC SELF-CLEANING



CALEFFI XF
577
3/4" - 1" - 1 1/4" - 1 1/2" - 2" - Ø22 - Ø28

MANUAL CLEANING



DIRTMAGPLUS®
5453
3/4" - 1" - 1 1/4" - Ø22 - Ø28

BOILER SYSTEMS WITH TECHNICAL ROOM - COOLING SYSTEMS

TECHNOPOLYMER DIRT SEPARATOR WITH MAGNET

STANDARD FLOW RATES



DIRTMAG®
5453
3/4" - 1" - 1 1/4" - Ø22 - Ø28

TECHNOPOLYMER DIRT SEPARATOR WITH DOUBLE MAGNET

HIGH FLOW RATES



DIRTMAGPRO®
5457
3/4" - 1" - 1 1/4" - Ø22 - Ø28

TECHNOPOLYMER MAGNETIC FILTER DIRT SEPARATOR

SEMI-AUTOMATIC CLEANING



CALEFFI XF
577
3/4" - 1" - 1 1/4" - 1 1/2" - 2" - Ø22 - Ø28

MEDIUM/LARGE SYSTEMS

TECHNOPOLYMER MAGNETIC DIRT SEPARATOR



DIRTMAG®
5453
1 1/2" - 2"

TECHNOPOLYMER MAGNETIC FILTER DIRT SEPARATOR



CALEFFI XF
577
1 1/2" - 2"

BRASS DIRT SEPARATOR WITH MAGNET



DIRTMAG®
5463
3/4" - 1" - 1 1/4" - 1 1/2" - 2"

LARGE SYSTEMS

STEEL DIRT SEPARATOR WITH MAGNET

IN-LINE INSTALLATION



DIRTMAG®
5466
DN 50 - DN 65 - DN 80 - DN 100 - DN 125 - DN 150



DIRTMAG®
5466
DN 200 - DN 250 - DN 300

STEEL DIRT SEPARATOR WITH MAGNET



CALEFFI XL
579
DN 50 - DN 65 - DN 80 - DN 100 - DN 125 - DN 150

SELF-CLEANING DIRT SEPARATOR FILTER WITH MAGNET

BY-PASS INSTALLATION



DIRTMAGCLEAN®
5790
2"

DIRT SEPARATORS FOR WALL-HANGING BOILER SYSTEMS

Magnetic filters dirt separators



5459 CALEFFI XS®

Under-boiler magnetic filter. Angled connections.
PATENT PENDING

Maximum working pressure: 3 bar
Medium temperature range: 0–90 °C
Material: brass
Finish: chrome plated

Code	Inlet connection	Outlet connection		
545900	3/4" M	3/4" F captive nut	1	10



5459 CALEFFI XS®

Under-boiler magnetic filter.
In-line installation.
PATENT PENDING

Maximum working pressure: 3 bar
Medium temperature range: 0–90 °C
Material: brass
Finish: chrome plated

Code	Inlet connection	Outlet connection		
545910	3/4" M	3/4" F captive nut	1	12



Reduced centre distance connection fitting with nut and gasket.

Finish: chrome plated
Material: brass

Code	Connection		
F0001297	3/4" F	1	-



Flushing kit and additives addition.

Code		
F0001037	1	10

Water treatment kit



KIT5459

Protection pack.
Package complete with:
- Under-boiler magnetic filter;
- C3 FAST CLEANER;
- C1 FAST INHIBITOR.

To be used with kit code F0001037.

Code		
KIT545900	1	-

Under-boiler dirt separator strainer with magnet



5450 DIRTMAG®MINI

Under-boiler dirt separator strainer with magnet.
Drain cock with hose connection.
PATENT PENDING

Maximum working pressure: 3 bar
Medium temperature range: 0–90 °C
Material: technopolymer

Code	Inlet connection	Outlet connection		
545000	3/4" M captive nut	3/4" F	1	5



5450 DIRTMAG®MINI

Under-boiler dirt separator strainer with magnet and shut-off valves.
Drain cock with hose connection.
PATENT PENDING

Maximum working pressure: 3 bar
Medium temperature range: 0–90 °C
Material: technopolymer

Code	Connection		
545022	Ø 22	1	5

DIRT SEPARATORS FOR HEAT PUMP SYSTEMS

Semi-automatic self-cleaning magnetic filter



577
CALEFFI XF

Semi-automatic self-cleaning magnetic filter.
Adjustable for horizontal and vertical pipes.
Drain cock with hose connection.
PATENT PENDING

Maximum working pressure: 3 bar
Medium temperature range: 0–90 °C
Strainer mesh size Ø: 0,16 mm
Material: technopolymer

Code	Connection		
577500	3/4″F	1	-
577600	1″F	1	-
577700	1 1/4″F	1	-
577200	Ø 22	1	-
577300	Ø 28	1	-



577
CALEFFI XF

Semi-automatic self-cleaning magnetic filter.
Adjustable for horizontal and vertical pipes.
Drain cock with hose connection.
Complete with by-pass.
PATENT PENDING

Maximum working pressure: 3 bar
Medium temperature range: 0–90 °C
Strainer mesh size Ø: 0,16 mm
Material: technopolymer

Code	Connection		
577800	1 1/2″F	1	-
577900	2″F	1	-



577

Insulation for semi-automatic self-cleaning magnetic filter.

Code	Article use		
CBN577500	577200, 577300, 577500, 577600, 577700	1	-
CBN577800	577800, 577900	1	-

Multifunction device in technopolymer with dirt separator and strainer



5453
DIRTMAG®PLUS

Multifunction device with dirt separator and strainer.
Dirt separator with composite internal element, complete with magnet.
Two inspectable filters with steel mesh: 1 for first passage (blue finish) already installed, 1 for maintenance (grey finish) in pack.
Shut-off valves with nut, brass body.
Drain cock with hose connection.
Adjustable for horizontal, vertical or 45 ° installation.

Maximum working pressure: 3 bar
Medium temperature range: 0–90 °C
Material: technopolymer

Code	Connection		
545375	3/4″F	1	5
545376	1″F	1	5
545377	1 1/4″F	1	5
545372	Ø 22	1	5
545373	Ø 28	1	5



Accessory kit for circuit filling and flushing, for 5453 series.

Code		
F49476	1	-



Spare strainers.

Code	Notes		
F49474/BL	first passage strainer (blue)	1	10
F49474/GR	maintenance strainer (grey)	1	10

DIRT SEPARATORS FOR BOILER SYSTEMS OR CHILLER, WITH TECHNICAL ROOM

Technopolymer dirt separators with magnet



5453 DIRTMAG®

Technopolymer dirt separator **with magnet**. **Adjustable for horizontal or vertical installations**.
Drain cock with hose connection.
INTERNATIONAL APPLICATION PENDING

Maximum working pressure: 3 bar
Medium temperature range: 0–90 °C
Material: technopolymer

Code	Connection	Max. recommended flow rate (m^3/h)		
545305	3/4″F	1,3	1	5
545306	1″F	1,3	1	5
545307	1 1/4″F	2,1	1	5
545302	Ø 22	1,3	1	5
545303	Ø 28	1,3	1	5



5453 DIRTMAG®

Technopolymer dirt separator **with magnet**. **Adjustable for horizontal or vertical installations**.
Drain cock with hose connection.
INTERNATIONAL APPLICATION PENDING

Maximum working pressure: 3 bar
Medium temperature range: 0–90 °C
Material: technopolymer

Code	Connection	Max. recommended flow rate (m^3/h)		
545308	1 1/2″F	4,3	1	-
545309	2″F	6	1	-



5453

Insulation for dirt separators 5453 series.

Code	Article use		
CBN545305	545305, 545306, 545705, 545706, 545702, 545703, 545302, 545303	1	-
CBN545307	545307, 545707	1	-
CBN545308	545308	1	-
CBN545309	545309	1	-



5453 DIRTMAG®

Technopolymer dirt separator **with magnet**. **Adjustable for horizontal or vertical installations.**
Drain cock with hose connection.
INTERNATIONAL APPLICATION PENDING

Maximum working pressure: 3 bar
Medium temperature range: 0–90 °C

Code	Connection	Max. recommended flow rate (m^3/h)		
545325	3/4″F	1,3	1	-
545326	1″F	1,3	1	-

Application diagram wall-hanging boiler

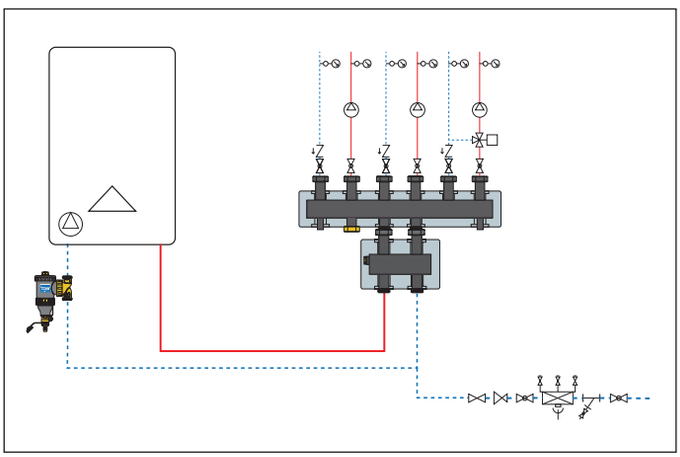

Application diagram boiler

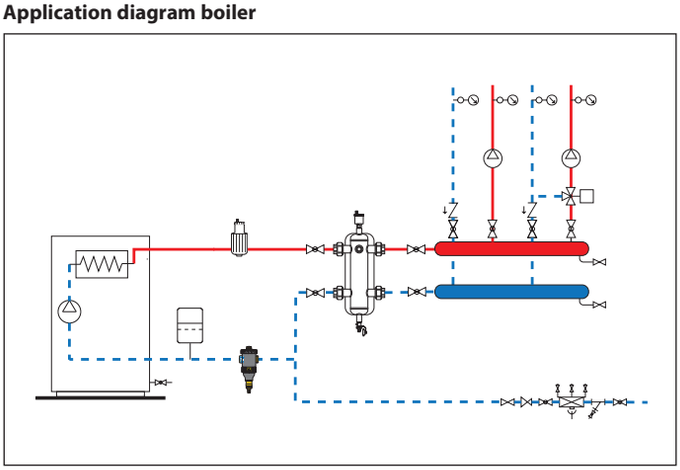



5453
DIRTMAG®

Technopolymer dirt separator with shut off valve, **with magnet**.
Adjustable for horizontal or vertical pipes.
Drain cock with hose connection.
INTERNATIONAL APPLICATION PENDING

Maximum working pressure: 3 bar
Medium temperature range: 0–90 °C
Material: technopolymer

Code	Connection	Max. recommended flow rate (m^3/h)		
545345	3/4″ F	1,3	1	5
545346	1″ F	1,3	1	5
545347	1 1/4″ F	2,1	1	5



5453

Insulation for dirt separators 54534 series.

Code	Article use		
CBN545345	545345, 545346, 545347	1	-



5453 NEW

Flushing KIT for 5453 Series.

Code	Notes	
545300	for DIRTMAG, XF, DISCAL and DISCALDIRTMAG technopolymer measures 3/4″, 1″, 1 1/4″, ∅22, ∅28	1



5457
DIRTMAG®PRO

Technopolymer dirt separator **with double magnet** for high flow rates.
Adjustable for horizontal or vertical pipes.
Drain cock with hose connection.

Maximum working pressure: 3 bar
Medium temperature range: 0–90 °C
Material: technopolymer

Code	Connection	Max. recommended flow rate (m^3/h)		
545705	3/4″ F	1,6	1	5
545706	1″ F	1,8	1	5
545707	1 1/4″ F	2,6	1	5
545702	Ø 22	1,6	1	5
545703	Ø 28	1,8	1	5

Water treatment kit



5453

Protection pack.
Complete with:
- dirt separator with shut-off valves and magnet;
- C3 CLEANER;
- C1 INHIBITOR.

Code	Notes		
KIT545345	with 3/4″ dirt separator	1	-
KIT545346	with 1″ dirt separator	1	-
KIT545342	with Ø 22 dirt separator	1	-

Operating principle DIRTMAGPRO

The impurities circulating within the closed circuits of systems, consisting of some sand and dirt particles but mostly ferrous material such as magnetite, are collected in a large collection chamber that does not require frequent cleaning.
The ferrous impurities are captured by the removable magnetic ring and the four magnets positioned in the centre of the flow. These magnets allow greater velocity of the medium, up to 1.6 m/s and, as a result, help to achieve a higher flow rate. Made using a technopolymer material specifically designed for use in air-conditioning systems, this dirt separator is especially versatile as it can be installed on both horizontal and vertical pipes.

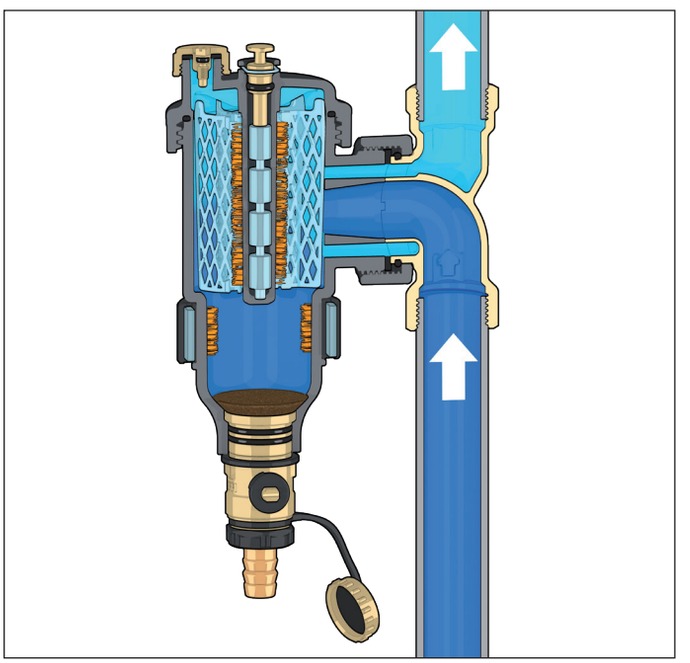

Brass dirt separators with magnet



5463 DIRTMAG®

Brass dirt separator with magnet.
Drain cock with hose connection.
Top connection with plug.
Particle separation rating down to 5 µm.
With insulation.
INTERNATIONAL APPLICATION PENDING

Maximum working pressure: 10 bar
Medium temperature range: 0–110 °C
Material: brass

Code	Connection		
546315	3/4″ F	1	-
546316	1″ F	1	5
546317	1 1/4″ F	1	-
546318	1 1/2″ F	1	-
546319	2″ F	1	-



5463 DIRTMAG®

Brass dirt separator with magnet.
Drain cock with hose connection.
Top connection with plug.
Particle separation rating down to 5 µm.
INTERNATIONAL APPLICATION PENDING

Maximum working pressure: 10 bar
Medium temperature range: 0–110 °C
Material: brass

Code	Connection		
546305	3/4″ F	1	6
546306	1″ F	1	6
546307	1 1/4″ F	1	5
546308	1 1/2″ F	1	5
546309	2″ F	1	5



5463

Insulation for dirt separators 5463 and 5462 series.

Code	Article use		
CBN546205	546205, 546206, 546305, 546306	1	-
CBN546207	546207, 546208, 546307, 546308	1	-
CBN546209	546209, 545309	1	-

Steel dirt separators with magnet



5466 DIRTMAG®

Steel dirt separator with magnet.
Particle separation rating down to 5 µm.
To be coupled with flat counterflanges EN 1092-1.
With insulation.

Maximum working pressure: 10 bar
Medium temperature range: 0–100 °C
Material: steel
Finish: coated

Code	Connection		
546650	DN 50 - PN 16	1	-
546660	DN 65 - PN 16	1	-
546680	DN 80 - PN 16	1	-
546610	DN 100 - PN 16	1	-
546612	DN 125 - PN 16	1	-
546615	DN 150 - PN 16	1	-



5466 DIRTMAG®

Steel dirt separator with magnet.
To be coupled with flat counterflanges EN 1092-1.
1/2″ F temperature probe connection.
Particle separation rating down to 5 µm.

Maximum working pressure: 10 bar
Medium temperature range: 0–100 °C
Material: steel
Finish: coated

Code	Connection		
546620	DN 200 - PN 10	1	-
546625	DN 250 - PN 10	1	-
546630	DN 300 - PN 10	1	-

SELF-CLEANING DEVICE FOR SYSTEMS

Self-cleaning magnetic filters dirt separators

5790 DIRTMAG®CLEAN

Self-cleaning dirt separator filter with magnet.
Body and support feet in stainless steel AISI 304.
Particle separation rating down to 2 µm.
Suitable for the addition of chemical additives.
Fitted for MODBUS-RTU management.
With insulation.
PATENT PENDING

Maximum working pressure: 10 bar
Medium temperature range: 5–85 °C
Electric supply: 230 V AC

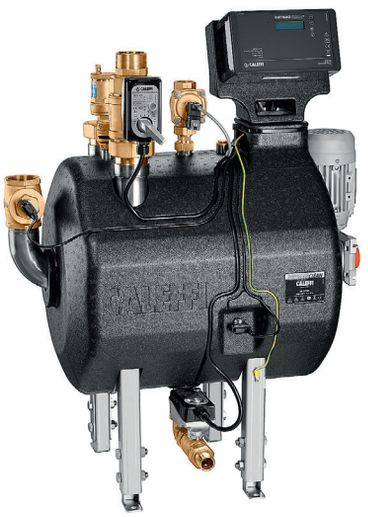

Code	Inlet connection	Outlet connection	Drain connection	Flushing connection	Kv (m^3/h)		
579000	2″M	2″F	1″M	1″F	45	1	-

5790 DIRTMAG®CLEAN

Manual cleaning dirt separator filter with magnet.
Body and support feet in stainless steel AISI 304.
Particle separation rating down to 2 µm.
Suitable for the addition of chemical additives.
With insulation.
PATENT PENDING

Maximum working pressure: 10 bar
Medium temperature range: 5–85 °C



Code	Inlet connection	Outlet connection	Drain connection	Flushing connection	Kv (m^3/h)		
579001	2″F	2″F	1″F	1″M	45	1	-

Application diagrams 579000/579001 code

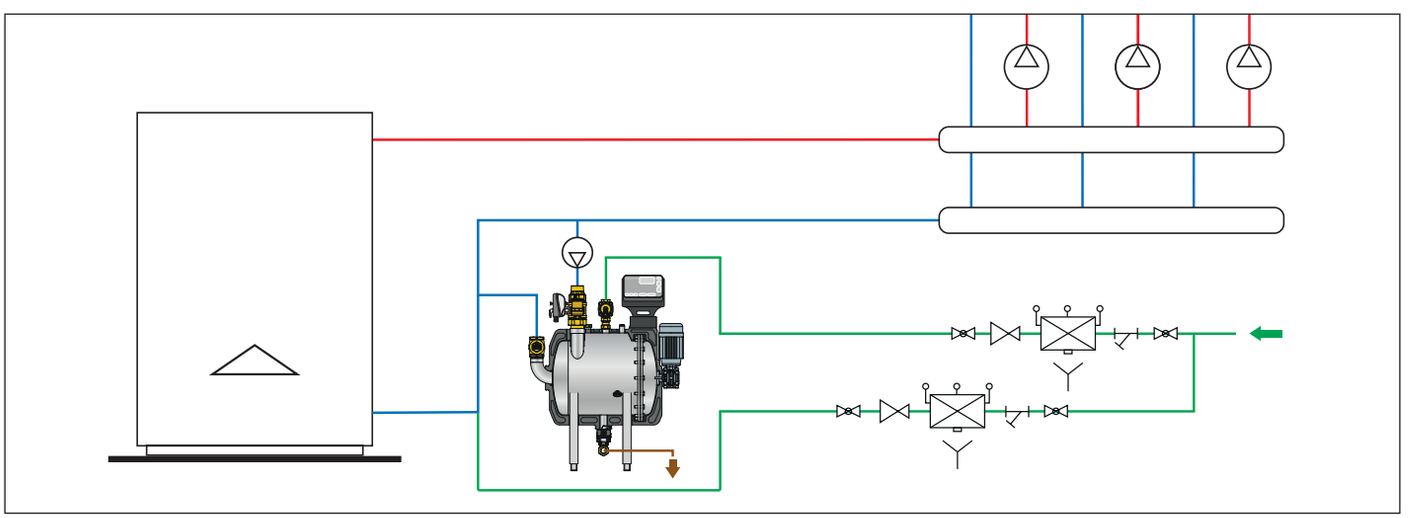

MAGNETIC FILTER

Stainless steel magnetic filter



579 NEW
CALEFFI XL

Stainless steel magnetic filter.
Stainless steel filtering elements singularly removable and inspectable.
To be coupled with flat counterflanges EN 1092-1.
With insulation.
PATENT PENDING

Maximum working pressure: 10 bar
Medium temperature range: 0–90 °C
Maximum percentage of glycol: 50 %
Medium: water, glycol solutions
Strainer mesh size Ø: 0,1 mm
Material: stainless steel

Code	Connection	Kv (m^3/h)	
579055	DN 50 - PN 16	60	1
579065	DN 65 - PN 16	95	1



579 NEW
CALEFFI XL

Stainless steel magnetic filter.
Stainless steel filtering elements singularly removable and inspectable.
Support legs in stainless steel AISI 304.
To be coupled with flat counterflanges EN 1092-1.
With insulation.
PATENT PENDING

Maximum working pressure: 10 bar
Medium temperature range: 0–90 °C
Maximum percentage of glycol: 50 %
Medium: water, glycol solutions
Strainer mesh size Ø: 0,1 mm
Material: stainless steel

Code	Connection	Kv (m^3/h)	
579085	DN 80 - PN 16	140	1
579105	DN 100 - PN 16	190	1
579125	DN 125 - PN 16	300	1
579155	DN 150 - PN 16	340	1



579 NEW

Support legs in stainless steel AISI 304 for magnetic filters 579 series.

Code	
579005	1



579 NEW

High performance automatic air vent for 579 series magnetic filter.
With insulation.

Code	
579006	1

z

Characteristic components

1. Stainless steel body
2. Stainless steel strainer element
3. Magnet
4. Separator disc
5. Insulation

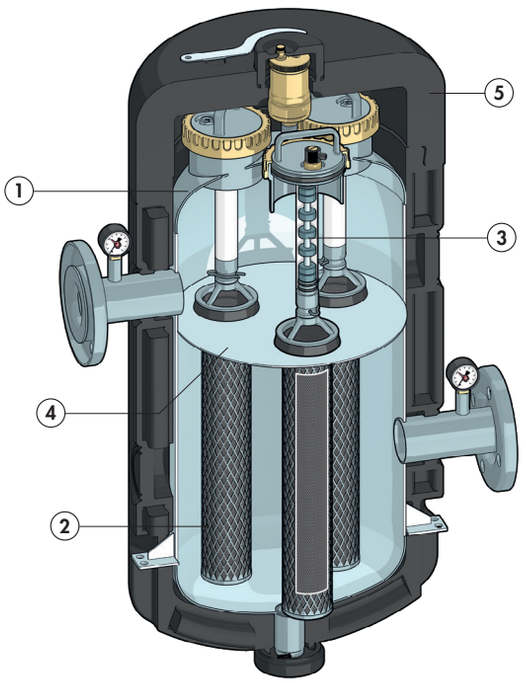

Application diagrams

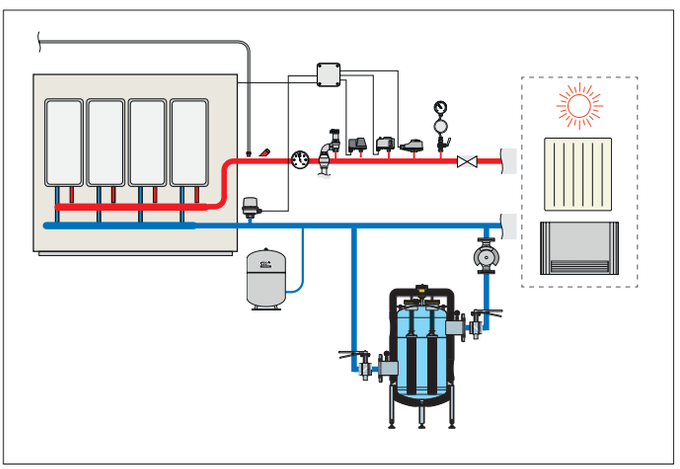

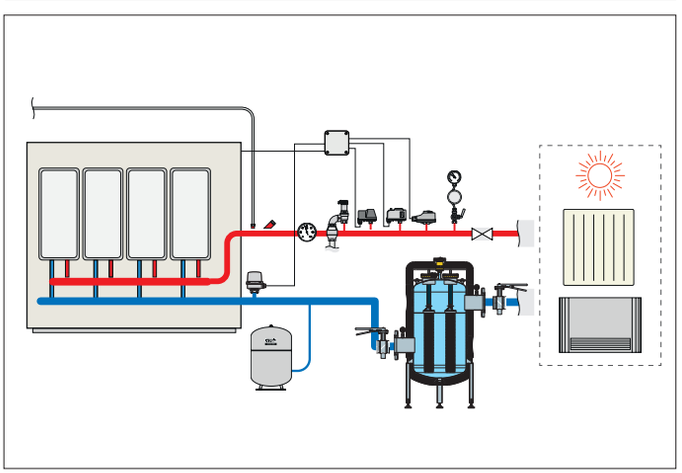

Operating principle

The water enters the device and passes through the zone in which magnetic impurities are captured and the strainer element, which retain the impurities by mechanically selecting the particles according to their size. The large surface area of the strainer meshes, with a mesh size of 100 µm, helps to maintain excellent hydraulic characteristics in spite of the high degree of separation.

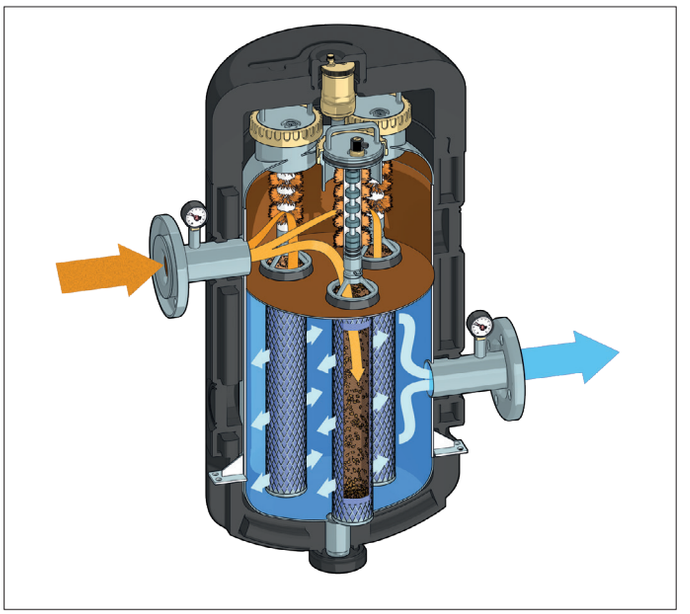

Strainer

The device can be maintained and cleaned by removing and washing the strainer elements, without it being necessary to empty the main body. The fact that there are several small strainer elements also means that this procedure can be carried out by one person on their own.

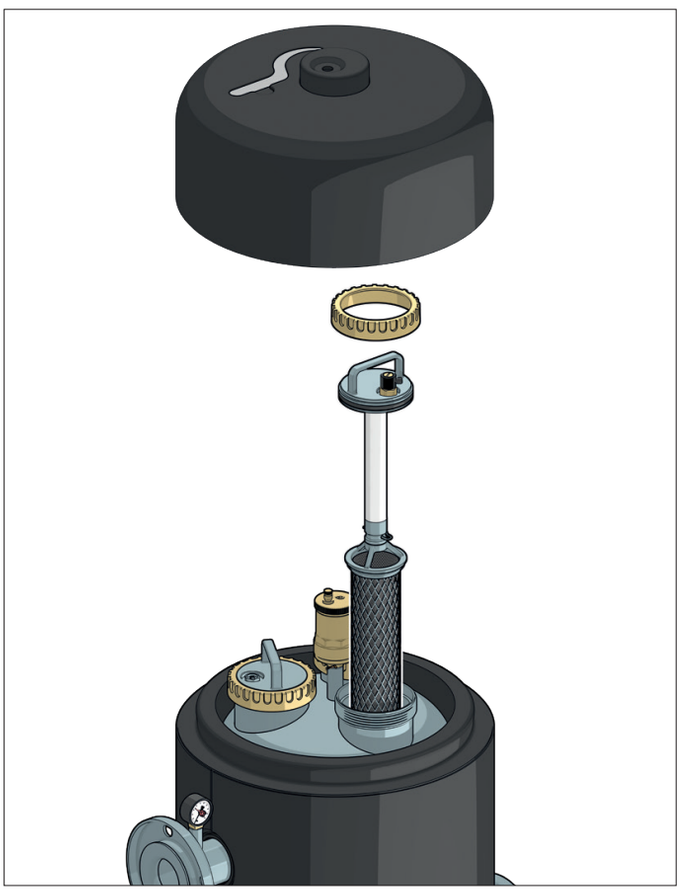

Automatic air vents

	Standard automatic air vents							
Code	***5020***30/40	***5020***31/41	***5020***50/60	***5020***51/61	***5021***30/40	***5021***31/41	***5021***32/42	***5021***33
	MINICAL®							
								
Material	brass	nickel plated/brass	brass	nickel plated/brass	brass	nickel plated/brass	nickel plated/brass	brass
Maximum working pressure	10 bar							
Maximum working temperature	120 °C				110 °C			
Automatic shut-off	optional		-		✔			
Hygroscopic cap	optional		✔		optional		✔	-
Anti-suction valve	optional		optional		optional		optional	✔
Connections	3/8″ - 1/2″	3/8″ - 1/2″	3/4″ - 1″	3/4″ - 1″	3/8″ - 1/2″	3/8″ - 1/2″	3/8″ - 1/2″	3/8″

	Compact automatic air vents			
Code	***5024***20/30	***5025***30/33/43	***5026***30/40/41	***5027***30
	ROBOCAL®			
				
Material	brass	brass	nickel plated/brass	brass
Maximum working pressure	10 bar			
Maximum working temperature	115 °C	110 °C	115 °C	110 °C
Automatic shut-off	optional	✔	optional	✔
Hygroscopic cap	-	-	-	-
Anti-suction valve	-	-	optional	optional
Connections	1/4″ - 3/8″	3/8″ - 1/2″	3/8″ - 1/2″	3/8″

	Automatic air vents with high discharge capacity			
Code	***501***500	***551***004	***5022***21/31/41	***551***400
	MAXCAL®	**DISCALAIR®**	**VALCAL®**	**DISCALAIR®PLUS**
				
Material	brass	brass	nickel plated/brass	brass
Maximum working pressure	16 bar	10 bar	10 bar	16 bar
Maximum working temperature	120 °C	110 °C	120 °C	110 °C
Automatic shut-off	-	-	optional	-
Hygroscopic cap	-	optional	optional	-
Anti-suction valve	-	optional	optional	-
Connections	3/4″	1/2″	1/4″- 3/8″- 1/2″	1/2″

Hygroscopic cap

The discs increase in volume by 50 % when they come into contact with water. This leads to valve closure, in order to avoid potential leaks of water.

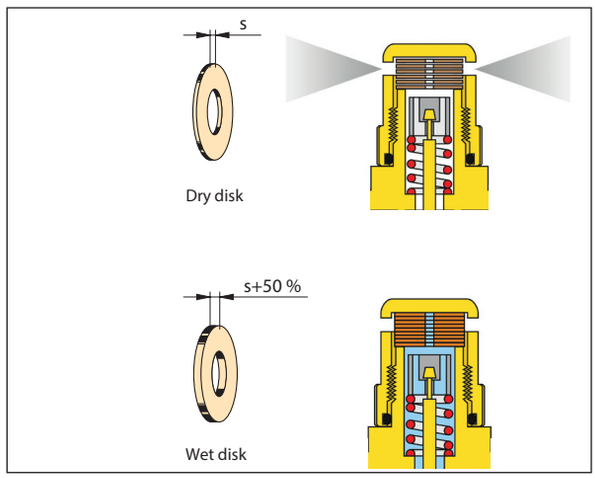

Automatic shut-off cock

This facilitates maintenance operations by inhibiting the flow of water when the valve is deactivated, and makes it easier to make sure the air vent device is working.

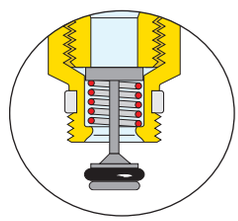

Anti-suction valve

Installed on the air vent line, it functions as a check valve: it only allows air to be released.

In a situation where the system experiences negative pressure, the internal element closes off the outlet channel to prevent unwanted air from entering.

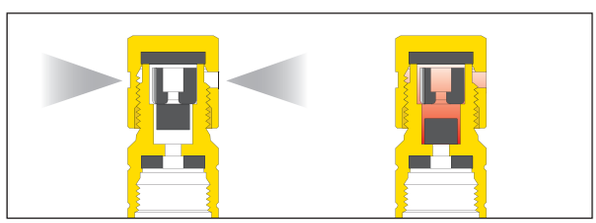

AUTOMATIC AIR VENTS

Standard automatic air vents



5020 MINICAL®

Automatic air vent.

Maximum working pressure: 10 bar
Maximum air discharge pressure: 2,5 bar
Medium temperature range: 0–120 °C
Material: brass

WRAS APPROVED PRODUCT CERTIFICATION MARK

Code	Connection		
502030	3/8″ M	10	50
502040	1/2″ M	10	50



5020 MINICAL®

Automatic air vent. With hygroscopic safety cap.

Maximum working pressure: 10 bar
Maximum air discharge pressure: 2,5 bar
Medium temperature range: 0–120 °C
Material: brass

WRAS APPROVED PRODUCT CERTIFICATION MARK

Code	Connection		
502050	3/4″ M	10	50
502060	1″ M	10	50



5021 MINICAL®

Automatic air vent.
PTFE seal connection.
With automatic shut-off cock.

Maximum working pressure: 10 bar
Maximum air discharge pressure: 2,5 bar
Medium temperature range: 0–110 °C
Material: brass

WRAS APPROVED PRODUCT CERTIFICATION MARK

Code	Connection	Notes		
502130	3/8″ M	-	10	50
502140	1/2″ M	without PTFE seal	10	50



5021 MINICAL®

Automatic air vent.
With automatic shut-off cock and anti-vacuum cap.

Maximum working pressure: 10 bar
Maximum air discharge pressure: 2,5 bar
Medium temperature range: 0–110 °C
Material: brass

Code	Connection		
502133	3/8″ M	1	50



5020 MINICAL®

Automatic air vent.

Maximum working pressure: 10 bar
Maximum air discharge pressure: 2,5 bar
Medium temperature range: 0–120 °C
Material: brass
Finish: nickel plated

WRAS APPROVED PRODUCT CERTIFICATION MARK

Code	Connection		
502031	3/8″ M	10	50
502041	1/2″ M	10	50



5020 MINICAL®

Automatic air vent. With hygroscopic safety cap.

Maximum working pressure: 10 bar
Maximum air discharge pressure: 2,5 bar
Medium temperature range: 0–120 °C
Material: brass
Finish: nickel plated

WRAS APPROVED PRODUCT CERTIFICATION MARK

Code	Connection		
502051	3/4″ M	10	50
502061	1″ M	10	50

Always replace the valve cap with Caleffi 5620 or R59681 AQUASTOP hygroscopic safety cap in all places where inspection is not possible.



5021 MINICAL®

Automatic air vent.
PTFE seal connection.
With automatic shut-off cock and hygroscopic safety cap.

Maximum working pressure: 10 bar
Maximum air discharge pressure: 2,5 bar
Medium temperature range: 0–110 °C
Finish: nickel plated
Material: brass

WRAS APPROVED PRODUCT CERTIFICATION MARK

Code	Connection	Notes		
502132 DEC	3/8″ M		10	50
502142	1/2″ M	without PTFE seal	10	50



5021 MINICAL®

Automatic air vent.
PTFE seal connection.
With automatic shut-off cock.

Maximum working pressure: 10 bar
Maximum air discharge pressure: 2,5 bar
Medium temperature range: 0–110 °C
Material: brass
Finish: nickel plated

WRAS APPROVED PRODUCT CERTIFICATION MARK

Code	Connection	Notes		
502131	3/8″ M	-	10	50
502141	1/2″ M	without PTFE seal	10	50

Automatic air vents with high discharge capacity



501 MAXCAL®

Automatic air vent for heating, cooling and refrigeration.
High discharge capacity.
Brass body and cover, stainless steel internal components.

Maximum working pressure: 16 bar
Maximum air discharge pressure: 6 bar
Medium temperature range: -20–120 °C

WRAS APPROVED PRODUCT CERTIFICATION MARK

Code	Connection	Drain connection		
501500	3/4″ F	3/8″ F	1	5



551 DISCALAIR®

High performance automatic air vent.

Maximum working pressure: 10 bar
Maximum air discharge pressure: 10 bar
Medium temperature range: 0–110 °C
Material: brass

ATTESTATION DE CONFORMITE SANITAIRE ACS

Code	Connection		
551004	1/2″ F	1	10



551 NEW DISCALAIR®PLUS

High-performance automatic air vent valve.
Adjustable air drain.

Maximum working pressure: 16 bar
Maximum air discharge pressure: 10 bar
Medium temperature range: 0–110 °C
Material: brass

Code	Connection		
551400	1/2″ F	1	10

Always replace the valve cap with Caleffi 5620 or R59681 AQUASTOP hygroscopic safety cap in all places where inspection is not possible.



5022 VALCAL®

Automatic air vent.

Maximum working pressure: 10 bar
Maximum air discharge pressure: 4 bar
Medium temperature range: 0–120 °C
Material: brass
Finish: nickel plated

Code	Connection		
502221	1/4″ M	1	25
502231	3/8″ M	1	25
502241	1/2″ M	1	25



5026 ROBOCAL®

Automatic air vent.

Maximum working pressure: 10 bar
Maximum air discharge pressure: 6 bar
Medium temperature range: 0–115 °C
Material: brass

WRAS APPROVED PRODUCT CERTIFICATION MARK

Code	Connection	Notes		
502630	3/8″ M	-	10	50
502640	1/2″ M	without O-Ring seal	10	50

Compact automatic air vents



5024 ROBOCAL®

Automatic air vent.

Maximum working pressure: 10 bar
Maximum air discharge pressure: 4 bar
Medium temperature range: 0–115 °C
Material: brass

WRAS APPROVED PRODUCT CERTIFICATION MARK

Code	Connection		
502420	1/4″ M	112	-
502430	3/8″ M	10	50



5027 ROBOCAL®

Automatic air vent. Complete with automatic shut-off cock.

Maximum working pressure: 10 bar
Maximum air discharge pressure: 6 bar
Medium temperature range: 0–110 °C
Material: brass

WRAS APPROVED PRODUCT CERTIFICATION MARK

Code	Connection		
502730	3/8″ M	10	50



5025 ROBOCAL®

Automatic air vent.
With automatic shut-off cock.

Maximum working pressure: 10 bar
Maximum air discharge pressure: 4 bar
Medium temperature range: 0–110 °C
Material: brass

WRAS APPROVED PRODUCT CERTIFICATION MARK

Code	Connection		
502533	3/8″ M	10	50
502543	1/2″ M	10	50

Accessories for automatic air vents



561

Automatic shut-off cock.
"For automatic air vents 5020, 5021, 5024, 5025, 5026, 5027 series.
PTFE seal on thread."

Maximum working pressure: 10 bar
Medium temperature range: 0–110 °C
Material: brass

Code	Inlet connection	Outlet connection	Notes		
561230	1/4″ F	3/8″ M	union washer	50	500
561300	3/8″ F	3/8″ M	-	10	-
561340	3/8″ F	1/2″ M	-	10	-
561400	1/2″ F	1/2″ M	without PTFE seal on thread	10	-



561

Automatic shut-off cock.
For automatic air vents 5020 and 5022 series.
PTFE seal on thread.

Maximum working pressure: 10 bar
Medium temperature range: 0–110 °C
Material: brass
Finish: nickel plated

Code	Inlet connection	Outlet connection	Notes		
561301	3/8" F	3/8" M	-	10	-
561401	1/2" F	1/2" M	without PTFE seal on thread	10	-



AQUASTOP®

Hygroscopic safety cap.

Material: brass

Code		
R59681	1	-



5621

Anti-vacuum cap.

Code		
562100	100	-



5622

Anti-vacuum cap.
For automatic air vents 5026 and 5027 series.

Code		
562200	100	-

Air vents for radiators



504 AERCAL®

Automatic air vent for radiators.
With hygroscopic safety cap.

Maximum working pressure: 10 bar
Maximum air discharge pressure: 2,5 bar
Medium temperature range: 5–100 °C
Material: brass
Finish: chrome plated

Code	Connection		
504401	1/2" M	1	25
504501	3/4" M	1	25
504611	1" M right	1	25
504621	1" M left	1	25



507 AERCAL®

End plug for radiators with automatic air vent.
With hygroscopic safety cap.
With rubber seal.

Maximum working pressure: 10 bar
Maximum air discharge pressure: 6 bar
Medium temperature range: 5–100 °C
Material: brass
Finish: chrome plated

Code	Connection		
507611	1" M right	1	25
507621	1" M left	1	25
507711	1 1/4" M right	1	25
507721	1 1/4" M left	1	25

Air vent for radiator accessories



AQUASTOP®

Hygroscopic safety cap.
For caps 507 series.

Material: brass
Finish: chrome plated

Code		
R59720	1	-



5620 AQUASTOP®

Hygroscopic safety cap.
For automatic air vents 5020, 5022 and 504 series.

Material: brass
Finish: nickel plated

Code		
562000	50	-

AIR VENTS FOR RADIATORS

Manual air vents for radiators



505

Manual air vent for radiators.
White POM (acetal resin) knob.
PTFE seal on thread.

Maximum working pressure: 10 bar
Medium temperature range: 5–90 °C
Material: brass
Finish: nickel plated

Code	Connection		
505111	1/8" M	50	-
505121	1/4" M	50	500
505131	3/8" M	50	500



5055

Manual air vent for radiators. Rubber seal.
White POM (acetal resin) knob.
Rubber seal.
PTFE seal on thread.
PATENT

Maximum working pressure: 10 bar
Medium temperature range: 5–90 °C
Material: brass
Finish: nickel plated

Code	Connection		
505511	1/8" M	10	100
505521	1/4" M	10	100
505531	3/8" M	10	100
505541	1/2" M	10	50

Manual air vent for radiators 5055 series

The identifying detail of this valve is an internal seal in a special elastic material which provides a tight seal in relation to limited tightening of the knob and possible temperature changes.

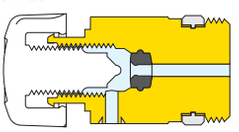



5054

Manual air vent for radiators. **Adjustable drain**.
White POM (acetal resin) knob.
PTFE seal on thread.

Maximum working pressure: 10 bar
Medium temperature range: 5–90 °C
Material: brass
Finish: nickel plated

Code	Connection		
505411	1/8" M	50	-
505421	1/4" M	50	-
505431	3/8" M	50	-
505441	1/2" M	50	-

Hygroscopic air vents for radiators



5080

Automatic hygroscopic air vent for radiators.
White POM (acetal resin) knob.
PTFE seal on thread.

Maximum working pressure: 10 bar
Medium temperature range: 5–100 °C
Material: brass
Finish: nickel plated

Code	Connection		
508011	1/8" M	25	-
508021	1/4" M	25	-
508031	3/8" M	25	-
508041	1/2" M	25	-

Spare parts for manual air vents



5081

Spare hygroscopic cartridge for 5080 series.

Code	Connection		
508100	12 p.1,5	25	-

Drain cock for radiators



337

Drain cock.
Adjustable outlet.
PTFE seal on thread.

Maximum working pressure: 6 bar
Medium temperature range: 5–85 °C
Medium: water, glycol solutions
Maximum percentage of glycol: 30 %

Code	Connection		
337121	1/4″ M	50	200
337131	3/8″ M	50	200



337

Drain cock with metal seal.
Adjustable outlet.
PTFE seal on thread.

Maximum working pressure: 10 bar
Medium temperature range: 5–100 °C

Code	Connection		
337221	1/4″ M	80	400
337231	3/8″ M	50	250



560

Drain cock for radiators and wall-mounted boilers.
The 10-piece pack includes an extractor code 560000.

Maximum working pressure: 10 bar
Medium temperature range: 5–100 °C
Finish: nickel plated

Code	Connection	Notes		
560421	1/2″ M	drain cock	10	-
560000	-	extractor hose connection	25	-

Deaerators - installation at air collection points

ALL SYSTEM TYPES

AUTOMATIC AIR VENT VALVE



DISCALAIR®
551
1/2″



DISCALAIR®PLUS
551
1/2″

Deaerators - in-line installation

WALL-MOUNTED BOILER SYSTEMS

TECHNOPOLYMER DEAERATOR



DISCALSLIM®
551
3/4″ - 1″– Ø 18 - Ø 22

HEAT PUMP SYSTEMS

HIGH-EFFICIENCY DEAERATOR FOR HEAT PUMP SYSTEMS



CALEFFI HED®
5516
1″ - 1 1/4″– Ø 22 - Ø 28

TECHNOPOLYMER DEAERATOR



DISCAL®
551
3/4″ - 1 1/4″



DISCAL®
551
1 1/2″ - 2″

WALL-MOUNTED BOILER SYSTEMS WITH TECHNICAL ROOM

BRASS DEAERATOR WITH ADJUSTABLE CONNECTIONS



DISCAL®
551
3/4″ - 1″ - Ø 22 - Ø 28

TECHNOPOLYMER DEAERATOR WITH ADJUSTABLE CONNECTIONS



DISCAL®
551
3/4″ - 1″ - 1 1/4″ - Ø22 - Ø28

MEDIUM/LARGE SYSTEMS

BRASS DEAERATOR



DISCAL®
551
3/4″ - 1″ - 1 1/4″ - 1 1/2″ - 2″

TECHNOPOLYMER DEAERATOR WITH ADJUSTABLE CONNECTIONS



DISCAL®
551
1 1/2″ - 2″

LARGE SYSTEMS

STEEL DEAERATOR



DISCAL®
551
DN 50 - DN 65 - DN 80 - DN 100 - DN 125 - DN 150



DISCAL®
551
DN 200 - DN 250 - DN 300

DEAERATORS

High-efficiency deaerators at air collection points



551 DISCALAIR®

High performance automatic air vent.

Maximum working pressure: 10 bar
Maximum air discharge pressure: 10 bar
Medium temperature range: 0–110 °C
Material: brass

Code	Connection		
551004	1/2″F	1	10



551 DISCALAIR®PLUS NEW

High-performance automatic air vent valve.
Adjustable air drain.

Maximum working pressure: 16 bar
Maximum air discharge pressure: 10 bar
Medium temperature range: 0–110 °C
Material: brass

Code	Connection		
551400	1/2″F	1	10

Always replace the valve cap with Caleffi 5620 or R59681 AQUASTOP hygroscopic safety cap in all places where inspection is not possible.

Under-boiler deaerators



551 DISCAL®SLIM

Deaerator.
Adjustable for horizontal and vertical pipes.
With hygroscopic safety cap.
PATENT PENDING

Maximum working pressure: 3 bar
Medium temperature range: 0–110 °C
Material: technopolymer

Code	Connection		
551805	3/4″F	1	5
551806	1″F	1	5
551801	Ø 18	1	5
551802	Ø 22	1	5



551

Insulation for deaerators DISCALSLIM 551 series.

Code	Article use		
CBN551805	551801, 551802, 551805, 551806	1	8

Deaerators for systems with technical room



551 DISCAL®

Technopolymer deaerator.
Adjustable for horizontal or vertical installations.

Maximum working pressure: 3 bar
Medium temperature range: 0–90 °C
Material: technopolymer

Code	Connection		
551205	3/4″F	1	6
551206	1″F	1	6
551207	1 1/4″F	1	6
551202	Ø 22	1	6
551203	Ø 28	1	6



551 DISCAL®

Technopolymer deaerator.
Adjustable for horizontal or vertical installations.

Maximum working pressure: 3 bar
Medium temperature range: 0–90 °C
Material: technopolymer

Code	Connection		
551208	1 1/2″F	1	-
551209	2″F	1	-



551

Insulation for technopolymer deaerators 551 series.

Code	Article use		
CBN551202	551202, 551203, 551205, 551206	1	-
CBN551207	551207	1	-
CBN551208	551208	1	-
CBN551209	551209	1	-



551 DISCAL®

Brass deaerator.
Adjustable for horizontal or vertical installations.

Maximum working pressure: 10 bar
Maximum air discharge pressure: 10 bar
Medium temperature range: 0–110 °C
Material: brass

Code	Connection		
551705	3/4″F	1	5
551706	1″F	1	5
551716	1″M	1	5
551702	Ø 22	1	5
551703	Ø 28	1	5



551 DISCAL®

Brass deaerator.

Maximum working pressure: 10 bar
Maximum air discharge pressure: 10 bar
Medium temperature range: 0–110 °C
Material: brass

Code	Connection		
551003	3/4″F	1	10
551002	Ø 22	1	10

High-efficiency deaerator for heat pumps



5516 CALEFFI HED®

High-efficiency deaerator.
Adjustable for horizontal and vertical pipes with angled configuration.
With hygroscopic safety cap.

PATENT PENDING

Maximum working pressure: 3 bar
Medium temperature range: 0–90 °C
Medium: water
Material: technopolymer

Code	Connection		
551606	1″F	1	-
551607	1 1/4″F	1	-
551617	1 1/4″M	1	-
551602	Ø 22	1	-
551603	Ø 28	1	-



5516

Insulation for high-efficiency deaerators.

Code	Article use		
CBN551602	551602, 551603, 551606, 551607, 551617	1	8



Pressure gauge for high-efficiency deareator, 5516 series.

Code	Article use	Pressure gauge scale (bar)	Ø (mm)		
F0002253	305663, 305673	0–4	50	1	-

Deaerators for medium-large systems



551 DISCAL®

Brass deaerator.

Maximum working pressure: 10 bar
Maximum air discharge pressure: 10 bar
Medium temperature range: 0–110 °C
Material: brass

Code	Connection		
551005	3/4″ F	1	6
551006	1″ F	1	6
551007	1 1/4″ F	1	6
551008	1 1/2″ F	1	6
551009	2″ F	1	-



551

Insulation for deaerators 551 series.

Code	Article use		
CBN551005	551005, 551006	1	-
CBN551007	551007, 551008	1	-
CBN551009	551009	1	-

Deaerators for large systems



551 DISCAL®

Steel body deaerator.
To be coupled with flat counterflanges EN 1092-1.
With insulation.

Maximum working pressure: 10 bar
Maximum air discharge pressure: 10 bar
Material: steel
Finish: coated

Code	Connection		
551052	DN 50 - PN 16	1	-
551062	DN 65 - PN 16	1	-
551082	DN 80 - PN 16	1	-
551102	DN 100 - PN 16	1	-
551122	DN 125 - PN 16	1	-
551152	DN 150 - PN 16	1	-



551 DISCAL®

Steel body deaerator.
1/2″ F temperature probe connection.
To be coupled with flat counterflanges EN 1092-1.

Maximum working pressure: 10 bar
Maximum air discharge pressure: 10 bar
Medium temperature range: 0–110 °C
Material: steel
Finish: coated

Code	Connection		
551200	DN 200 - PN 10	1	-
551250	DN 250 - PN 10	1	-
551300	DN 300 - PN 10	1	-

Deaerators-Dirt separators

These are made by assembling, in a single product, a deaerator and a dirt separator. A single product can therefore be used both to separate air and to separate the impurities present in the system water.

Operating principle

The device makes use of the combined action of the deaerator and the dirt separator. The internal element creates swirling movements that facilitate the release of micro-bubbles and the subsequent creation of bubbles that then rise to the top of the device, from which they are evacuated by means of an automatic air vent with float. Moreover, the impurities in the water, striking against the surfaces of the internal element, are separated and fall to the bottom of the valve body.
Deaerators-dirt separators fitted with a magnet offer greater efficiency in the separation and collection of ferrous impurities. The impurities are captured inside the dirt separator body by the strong magnetic field created by the magnets inserted in the special outer ring.
With respect to the solutions that call for the installation of separate deaerators and dirt separators, the deaerators-dirt separators present the following advantages: they take up less space and require a smaller number of connections, and are therefore ideal for systems where it is not possible to install the two separate components. Nevertheless, two separate devices will always guarantee a higher performance level.

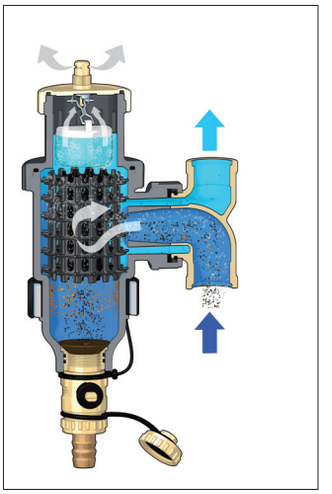

Sizing

Sizing a deaerator-dirt separator mainly depends on the speed at which the medium flows through the device, since an excessive speed would not allow correct separation of air and impurities.

As is known, the medium flow speed depends on the flow rate and the cross section. Remaining within the speed limits therefore means not exceeding certain **maximum** permissible **flow rates** for each size.

HEAT PUMP SYSTEMS

TECHNOPOLYMER DEAERATOR-DIRT SEPARATOR WITH MAGNET



DISCALDIRTMAG®
5464
3/4" - 1" - 1 1/4"
Ø22 - Ø28



DISCALDIRTMAG®
5464
1 1/2" - 2"

WALL-MOUNTED BOILER SYSTEMS WITH TECHNICAL ROOM - COOLING SYSTEMS

BRASS DEAERATOR-DIRT SEPARATOR WITH MAGNET



DISCALDIRTMAG®
5461
3/4" - 1 - 1 1/4"

TECHNOPOLYMER DEAERATOR-DIRT SEPARATOR WITH MAGNET



DISCALDIRTMAG®
5464
3/4" - 1" - 1 1/4"



DISCALDIRTMAG®
5464
1 1/2" - 2"

MEDIUM/LARGE SYSTEMS

STEEL DEAERATOR-DIRT SEPARATOR WITH MAGNET



DISCALDIRTMAG®
5461
1 1/2" - 2"

TECHNOPOLYMER DEAERATOR-DIRT SEPARATOR WITH MAGNET



DISCALDIRTMAG®
5464
1 1/2" - 2"

LARGE SYSTEMS

STEEL DEAERATOR-DIRT SEPARATOR



DISCALDIRT®
546
DN 50–DN 150



DISCALDIRT®
546
DN 200–DN 300

DEAERATORS

Deaerators-dirt separators with magnet



5464 DISCALDIRT®MAG

Technopolymer deaerator-dirt separator with magnet.
Adjustable for horizontal and vertical pipes.
With hygroscopic safety cap.
Drain cock with hose connection.

Maximum working pressure: 3 bar
Medium temperature range: 0–90 °C
Material: technopolymer

Code	Connection		
546405	3/4″F	1	5
546406	1″F	1	5
546407	1 1/4″F	1	5
546402	Ø 22	1	5
546403	Ø 28	1	5



5464 DISCALDIRT®MAG

Technopolymer deaerator-dirt separator with magnet.
Adjustable for horizontal and vertical pipes.
With hygroscopic safety cap.
Drain cock with hose connection.

Maximum working pressure: 3 bar
Medium temperature range: 0–90 °C
Material: technopolymer

Code	Connection		
546408	1 1/2″F	1	-
546409	2″F	1	-



5464

Insulation for deaerator-dirt separator with magnet 5464 Series.

Code	Article use		
CBN546402	546402, 546403, 546405, 546406	1	-
CBN546407	546407	1	-
CBN546408	546408	1	-
CBN546409	546409	1	-



5461 DISCALDIRT®MAG

Brass deaerator-dirt separator with magnet.
Drain cock with hose connection.
Particle separation rating down to 5 µm.

Maximum working pressure: 10 bar
Maximum air discharge pressure: 10 bar
Medium temperature range: 0–110 °C
Material: brass

Code	Connection		
546105	3/4″F	1	-
546106	1″F	1	-
546107	1 1/4″F	1	-



546

Insulation for deaerators-dirt separators 5461 and 546 series.

Code	Article use		
CBN546002	546005, 546006, 546105, 546106	1	-
CBN546007	546007, 546107	1	-



5461 DISCALDIRT®MAG

Deaerator-dirt separator with magnet.
Drain cock with hose connection.
Particle separation rating down to 5 µm.
With insulation.

Maximum working pressure: 10 bar
Maximum air discharge pressure: 10 bar
Medium temperature range: 0–100 °C
Material: steel
Finish: coated

Code	Connection		
546118	1 1/2″F	1	-
546119	2″F	1	-

Deaerators-dirt separators



546 DISCALDIRT®

Brass deaerator-dirt separator.
Drain cock with hose connection.
Particle separation rating down to 5 µm.

Maximum working pressure: 10 bar
Maximum air discharge pressure: 10 bar
Medium temperature range: 0–110 °C
Material: brass

Code	Connection		
546005	3/4" F	1	-
546006	1" F	1	-
546007	1 1/4" F	1	-
546002	Ø 22	1	-



546

Insulation for deaerators-dirt separators 5461 and 546 series.

Code	Article use		
CBN546002	546005, 546006, 546105, 546106	1	-
CBN546007	546007, 546107	1	-



546 DISCALDIRT®

Steel deaerator-dirt separator. Flanged connections.
Complete with drain valve.
Particle separation rating down to 5 µm.
To be coupled with flat counterflanges EN 1092-1.
With insulation.

Maximum working pressure: 10 bar
Maximum air discharge pressure: 10 bar
Material: steel
Finish: coated

Code	Connection	Medium temperature range (°C)		
546052	DN 50 - PN 16	0–105	1	-
546062	DN 65 - PN 16	0–105	1	-
546082	DN 80 - PN 16	0–105	1	-
546102	DN 100 - PN 16	0–105	1	-
546122	DN 125 - PN 16	0–100	1	-
546152	DN 150 - PN 16	0–100	1	-



546 DISCALDIRT®

Steel deaerator-dirt separator. Flanged connections.
1/2" F temperature probe connection.
Particle separation rating down to 5 µm.
To be coupled with flat counterflanges EN 1092-1.
Complete with drain valve.

Maximum working pressure: 10 bar
Maximum air discharge pressure: 10 bar
Medium temperature range: 0–110 °C
Material: steel
Finish: coated

Code	Connection		
546200	DN 200 - PN 10	1	-
546250	DN 250 - PN 10	1	-
546300	DN 300 - PN 10	1	-

DEAERATORS-DIRT SEPARATORS

Polyphosphate dispenser



5459 NEW
CALEFFI XP MINI

Under-boiler polyphosphate dispenser.
Comes with a polyphosphate crystal refill.
For domestic hot water circuit.
Average crystal shelf life: 17,5–20 m³ of domestic hot water (data refers to water with an average hardness level of 12 °f, pH 7 and temperature 20 °C).
Only use genuine refills code F0002572.
Average crystal refill shelf life: 17,5–20 m3 domestic hot water (data referring to water with an average hardness of 12°f, pH 7, temperature 20 °C and average domestic hot water usage).
Only use genuine refills code F0002572.
PATENT PENDING

Maximum working pressure: 6 bar
Medium temperature range: 5–30 °C
Ambient temperature range: 0–40 °C
Material: brass
Finish: chrome plated

Code	Inlet connection	Outlet connection		
545940	1/2" M	1/2" F captive nut	1	12



5459
CALEFFI XP

Under-boiler polyphosphate dispenser.
Complete with polyphosphate crystal refill.
For domestic hot water circuit.
Average crystal refill shelf life: 35–40 m3 domestic hot water (data referring to water with an average hardness of 12°f, pH 7, temperature 20 °C and average domestic hot water usage).
Only use genuine refills code F0001503.
PATENT PENDING

Maximum working pressure: 6 bar
Medium temperature range: 5–30 °C
Ambient temperature range: 0–40 °C
Material: brass
Finish: chrome plated

Code	Inlet connection	Outlet connection	Notes		
545950	1/2" M	1/2" F captive nut	-	1	5
545951	1/2" M	1/2" F captive nut	without crystal refill	1	5



Polyphosphate crystal refill.
Complete with spare internal strainer.
For dispenser 5459 series.

Code	Article use		
F0002572	545940	1	
F0001503	545950	1	-

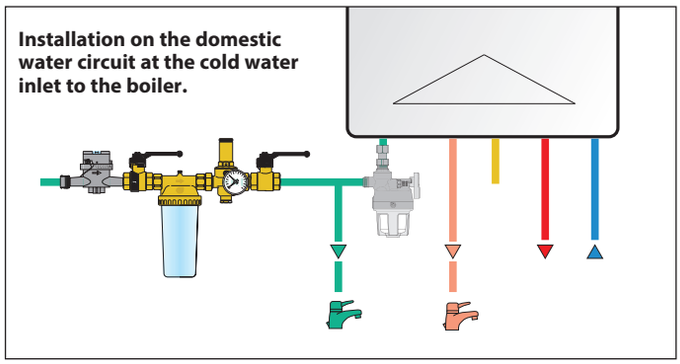



5459

Insulation for polyphosphate dispenser.

Code	Article use		
CBN545950	545950	1	-

Water treatment kit



KIT5459

Double X protection.
Package complete with:
- Under-boiler magnetic filter (545900 code);
- Under-boiler polyphosphate dispenser (545950 code).

Code		
KIT5459	1	-

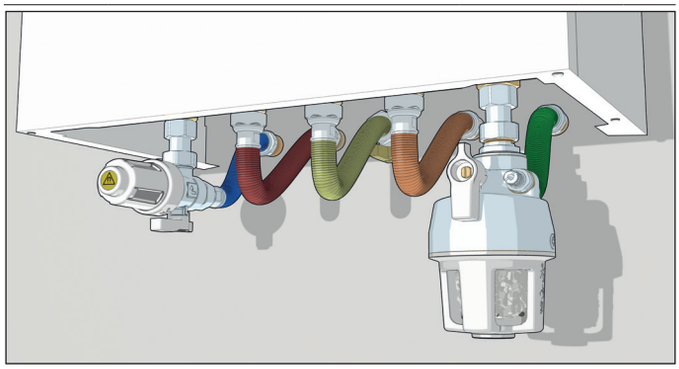

Check current national regulations for polyphosphate water treatment.

DOMESTIC HOT WATER TREATMENT

Chemical additives



5709 C3 CLEANER

Removes sludge, limescale and debris.
Dose: **0,5 litres of product every 150 litres of water in the system**.

BELGAQUA

Code	Volume (l)		
570911	0,5	6	-



5709 C1 INHIBITOR

Protects against corrosion and limescale.
Dose: **0,5 litres of product every 150 litres of water in the system**.

BELGAQUA

Code	Volume (l)		
570912	0,5	6	-



5709 C7 BIOCIDE

Prevents bacterial and fungal growth.
Dose: **0,5 litres of product every 150 litres of water in the system**.

Code	Volume (l)		
570913	0,5	6	-



5709 C4 LEAK SEALER

Liquid sealer.
Dose: **0,5 litres of product every 150 litres of water in the system**.

Code	Volume (l)		
570914	0,5	6	-



5709 C3 FAST CLEANER

Removes sludge, limescale and debris.
Dose: **0,4 litres of product every 150 litres of water in the system**.

BELGAQUA

Code	Volume (l)		
570915	0,4	4	-
570916	0,4	4	-

Treatment summary

	System cleaning	*Washing and sanitising*	*Protection against corrosion and limescale*	*Protection against bacterial growth*	*Repair of microfissures*
C3 CLEANER	●	●			
C3 FAST CLEANER	●	●			
C1 INHIBITOR			●		
C1 FAST INHIBITOR			●		
C7 BIOCIDE		●		●	
C4 LEAK SEALER					●

Cleaning and washing treatments: pour into the system and leave to circulate for the required time. Then drain the system to eliminate the impurities collected in the dirt separator.

Protective treatments: use in the system and check once a year.

Treatment "as needed" for minor leaks. Leave in the system.

Compact water treatment units



580

Automatic water treatment unit for softening and demineralisation.
Complete with:
- positive displacement meter with built-in conductivity measuring cell;
- by-pass regulator;
- downstream ball shut-off valve;
- drain cock and air vent.

With insulation.

Maximum working pressure: 4 bar
Medium temperature range: 4–30 °C

Code	Connection		
580020	1/2″ M	1	-



580

Automatic compact charging unit to EN 1717 standard with BA type backflow preventer, shut-off valve, strainer, pressure test ports for controlling the backflow preventer, pressure reducing valve.
For horizontal or vertical installations.
With insulation.
Backflow preventer certified to EN 12729 standard.
Pressure reducing valve certified to EN 1567 standard.
PATENT

Maximum working pressure: 10 bar
Medium temperature range: 5–65 °C

Adjustment pressure range: 0,8–4 bar
Material: brass

Code	Connection		
580011	1/2″ M	1	6



Connection fitting with nut and gasket.

Code	Connection		
F0001298	3/4″ F	1	-

An automatic charging unit, if not already present, must be installed upstream of the treatment unit in order to keep the pressure below the maximum pressure value of the treatment cartridge.

To avoid water backflow from the heating system, which is polluted and hazardous for human health, it is indispensable to install an automatic charging unit with a backflow preventer. The correct use of hydraulic backflow preventers is governed by the European reference standard EN 1717 (“Protection against pollution of potable water in water installations and general requirements of devices to prevent pollution by backflow”).

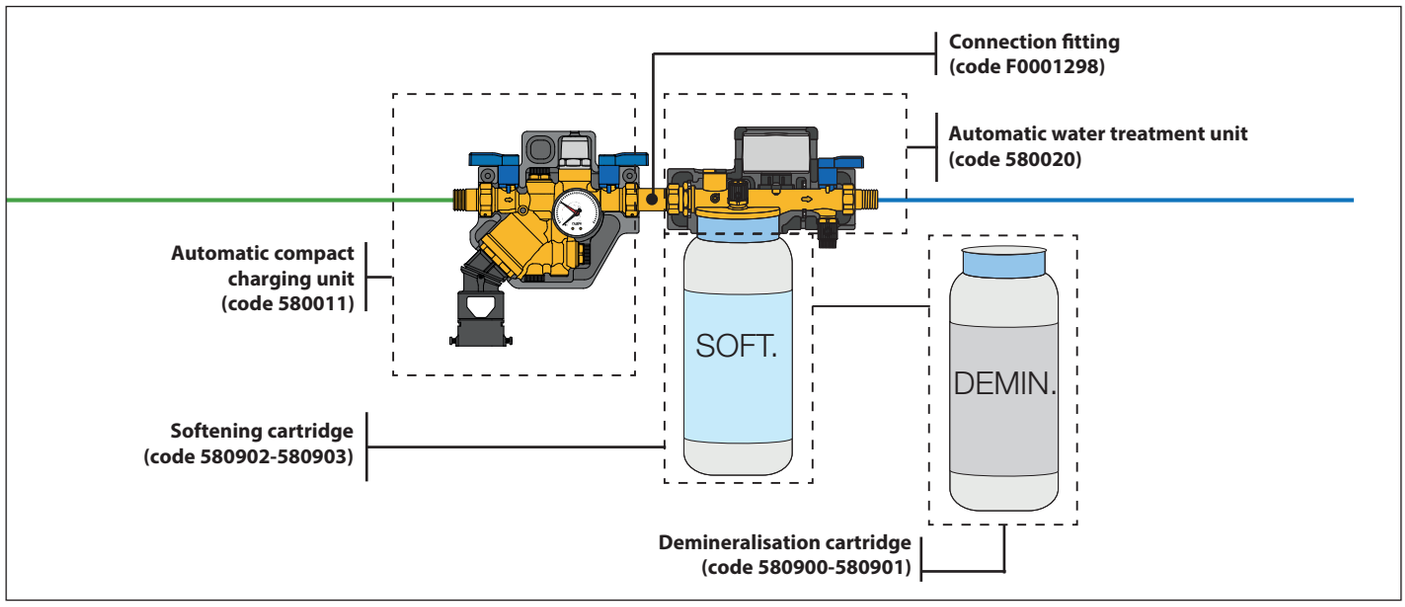

Softening cartridges



580

Disposable **softening** cartridge.

Maximum working pressure: 4 bar
Medium temperature range: 4–30 °C
Warehouse storage temperature range: 0–40 °C

Code	Notes	Nominal flow rate (l/min)		
580902	Sizing coefficient: 26 (hardness °f) 14 (hardness °dH)	2	1	-
580903	Sizing coefficient: 43 (hardness °f) 24 (hardness °dH)	4	1	-



5750

Hardness measurement kit.
Accuracy: 1 °f / 1 °dH.

Code		
575003	1	-

Softening cartridge sizing
The volume of treatable water depends on the hardness of the filling water and must be calculated as follows:

$$\text{Volume of treatable water } (m^3) = \frac{\text{Dimensioning coefficient}}{\text{hardness IN - hardness OUT}}$$

hardness IN = raw water hardness (°f/°dH)
hardness OUT = treated water hardness (°f/°dH)

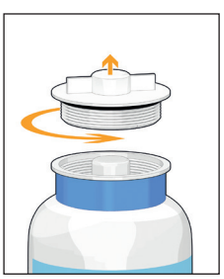

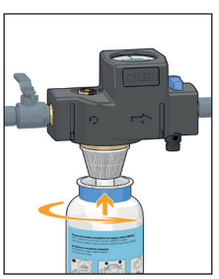



Demineralisation cartridges



580

Disposable **demineralisation** cartridge.

Maximum working pressure: 4 bar
Medium temperature range: 4–30 °C
Warehouse storage temperature range: 0–40 °C

Code	Notes	Nominal flow rate (l/min)		
580900	Sizing coefficient: 140 (residual cond. < 10 µS/cm) 220 (residual cond. < 50 µS/cm)	2	1	-
580901	Sizing coefficient: 180 (residual cond. < 10 µS/cm) 280 (residual cond. < 50 µS/cm)	4	1	-

Demineralisation cartridge sizing
The volume of treatable water depends on the electrical conductivity of the filling water, and must be calculated as follows:

$$\text{Volume of treatable water } (m^3) = \frac{\text{Sizing coefficient}}{\text{Electrical conductivity (µS/cm)}}$$

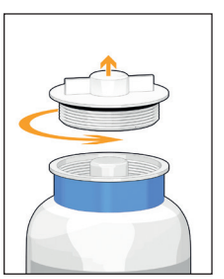

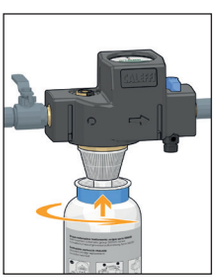



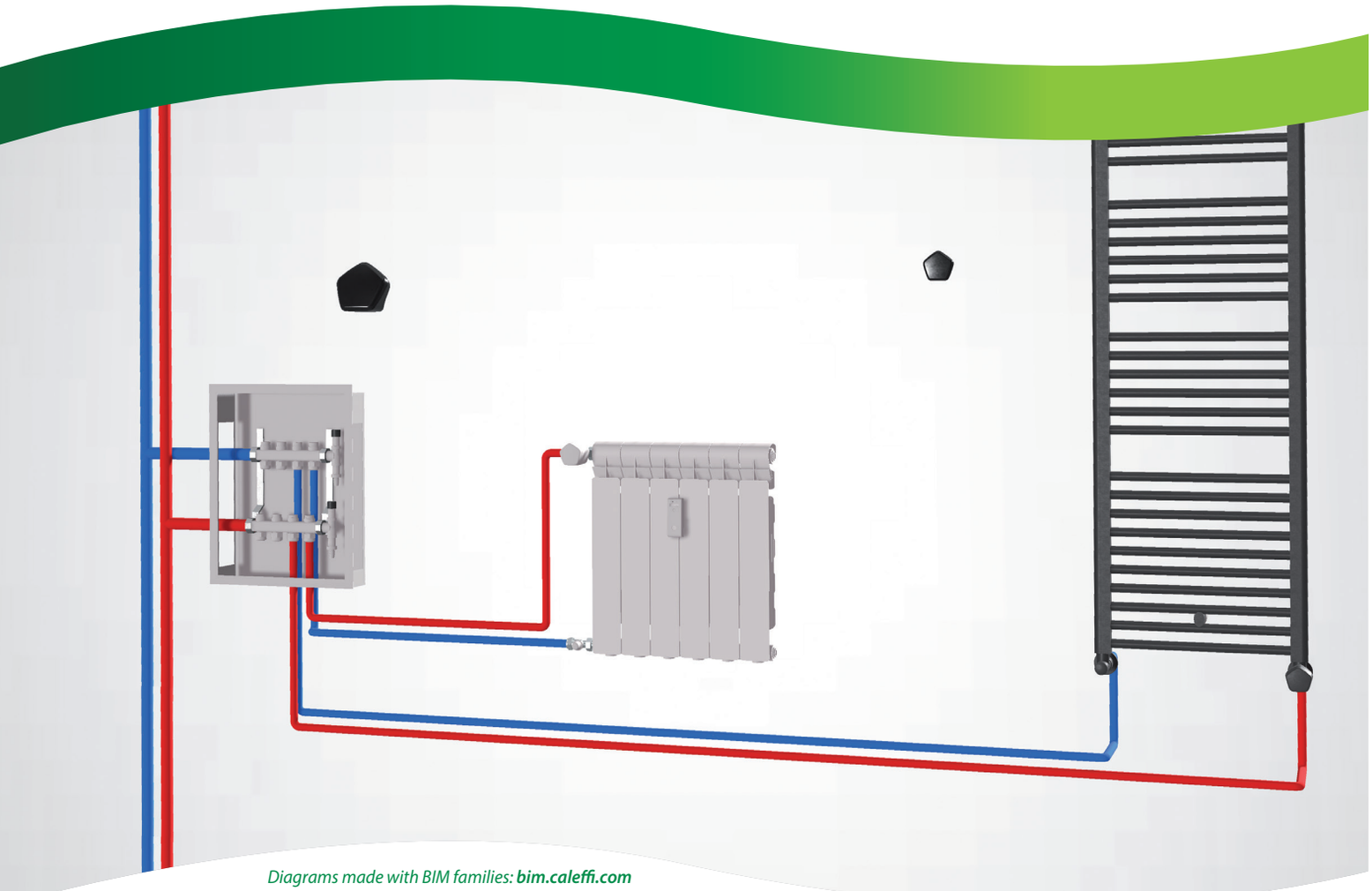

Diagrams made with BIM families: ***bim.caleffi.com***

Convertible radiator valves
Convertible radiator valves with pre-setting
Thermostatic valves
Lockshield valves
Thermostatic control heads
Manual radiator valves
Remote thermal regulation system (CALEFFI CODE®)
Convertible radiator valves, control head and lockshield valves HIGH-STYLE
Wall-covering plates
Radiator valves for one-pipe and two-pipe systems
Fittings
Accessories for radiators
Spare parts for radiator valves
Valves for panel radiators

CONVERTIBLE RADIATOR VALVES

Convertible radiator valves for copper pipes



338

Convertible radiator valve fitted for thermostatic control heads and thermo-electric actuator. Angled version.
For copper, plastic and multi-layer plastic pipe.

Maximum working pressure: 10 bar
Medium temperature range: 5–100 °C
Material: brass
Finish: chrome plated

Code	Radiator connection	Pipe connection	Kv (m^3/h)		
338302	3/8″ M	23 p. 1,5	2,22	10	50
338402	1/2″ M	23 p. 1,5	2,70	10	50
338452	1/2″ M	3/4″ M	2,70	10	50



339

Convertible radiator valve fitted for thermostatic control heads and thermo-electric actuator. Straight version.
For copper, plastic and multi-layer plastic pipes.

Maximum working pressure: 10 bar
Medium temperature range: 5–100 °C
Material: brass
Finish: chrome plated

Code	Radiator connection	Pipe connection	Kv (m^3/h)		
339302	3/8″ M	23 p. 1,5	1,35	10	50
339402	1/2″ M	23 p. 1,5	1,79	10	50
339452	1/2″ M	3/4″ M	1,79	10	50

Convertible radiator valves for steel pipes



401

Convertible radiator valve fitted for thermostatic control heads, electronic and thermo-electric actuators. Angled version.
For steel pipes.

Maximum working pressure: 10 bar
Medium temperature range: 5–100 °C
Material: brass
Finish: chrome plated

Code	Radiator connection	Pipe connection	Notes	Kv (m^3/h)		
401302	3/8″ M	3/8″ F	-	2,22	10	50
401402	1/2″ M	1/2″ F	-	2,70	10	50
401500	3/4″ M	3/4″ F	without rubber seal	3,36	5	25
401603	1″ M	1″ F	without rubber seal	4,47	5	25



402

Convertible radiator valve fitted for thermostatic control heads, electronic and thermo-electric actuators. Straight version.
For steel pipes.

Maximum working pressure: 10 bar
Medium temperature range: 5–100 °C
Material: brass
Finish: chrome plated

Code	Radiator connection	Pipe connection	Notes	Kv (m^3/h)		
402302	3/8″ M	3/8″ F	-	1,35	10	50
402402	1/2″ M	1/2″ F	-	1,79	10	50
402500	3/4″ M	3/4″ F	without rubber seal	2,58	5	25
402603	1″ M	1″ F	without rubber seal	4,43	5	25

CONVERTIBLE RADIATOR VALVES WITH PRE-SETTING

Convertible radiator valves with pre-setting for copper pipes



425

Convertible radiator valve fitted for thermostatic control heads and thermo-electric actuators.
With pre-setting. Angled version.
For copper, plastic and multilayer plastic pipes.

Maximum working pressure: 10 bar
Medium temperature range: 5–100 °C
Finish: chrome plated
Material: brass

Code	Radiator connection	Pipe connection		
425302	3/8″ M	23 p. 1,5	10	50
425402	1/2″ M	23 p. 1,5	10	50



426

Convertible radiator valve fitted for thermostatic control heads, electronic and thermo-electric actuators.
With pre-setting. Straight version.
For copper, plastic and multilayer plastic pipes.

Maximum working pressure: 10 bar
Medium temperature range: 5–100 °C
Finish: chrome plated
Material: brass

Code	Radiator connection	Pipe connection		
426302	3/8″ M	23 p. 1,5	10	50
426402	1/2″ M	23 p. 1,5	10	50

Convertible radiator valves with pre-setting for steel pipes



421

Convertible radiator valve fitted for thermostatic control heads, electronic and thermo-electric actuators.
With pre-setting. Angled version.
For steel pipes.

Maximum working pressure: 10 bar
Medium temperature range: 5–100 °C
Finish: chrome plated
Material: brass

Code	Radiator connection	Pipe connection	Notes		
421302	3/8″ M	3/8″ F	-	10	50
421402	1/2″ M	1/2″ F	-	10	50
421500	3/4″ M	3/4″ F	without rubber seal	1	25



422

Convertible radiator valve fitted for thermostatic control heads and thermo-electric actuators.
With pre-setting. Straight version.
For steel pipes.

Maximum working pressure: 10 bar
Medium temperature range: 5–100 °C
Finish: chrome plated
Material: brass

Code	Radiator connection	Pipe connection	Notes		
422302	3/8″ M	3/8″ F	-	10	50
422402	1/2″ M	1/2″ F	-	10	50
422500	3/4″ M	3/4″ F	without rubber seal	1	25

Pre-setting device
The convertible radiator valves are equipped with an internal device for pre-setting the head loss hydraulic characteristics.
Each passage cross section determines a specific Kv value for the creation of the head loss, which corresponds to a setting position on a graduated scale.

Pre-setting device operation
1- Remove the valve knob.

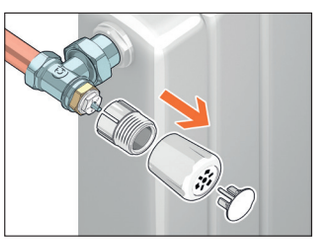

2- Lift the special control ring nut (supplied in package) of the pre-setting device and turn the control stem to select the required position on the graduated scale.

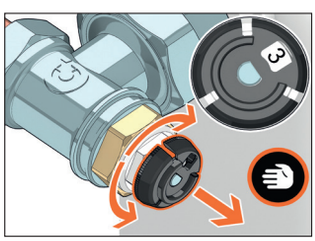

3- Lower the ring nut again.

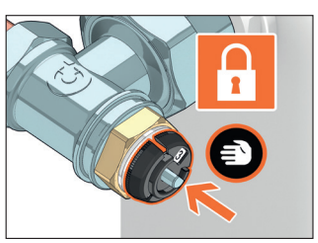

4- Position the manual knob, thermostatic control head or thermo-electric actuator on the valve.

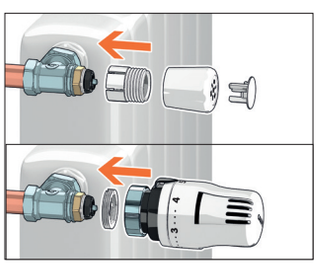

THERMOSTATIC VALVES

Thermostatic valves for copper pipes



222

Thermostatic radiator valve fitted for thermostatic and electronic control heads, thermo-electric actuators. Angled version.
For copper, single and multilayer plastic pipes.

Maximum working pressure: 10 bar
Medium temperature range: 5–100 °C
Material: brass
Finish: chrome plated

028

Code	Radiator connection	Pipe connection	Kvs (m^3/h)		
222302	3/8″ M	23 p. 1,5	2,29	10	50
222402	1/2″ M	23 p. 1,5	2,39	10	50



223

Thermostatic radiator valve fitted for thermostatic and electronic control heads, thermo-electric actuators. Straight version.
For copper, single and multilayer plastic pipes.

Maximum working pressure: 10 bar
Medium temperature range: 5–100 °C
Material: brass
Finish: chrome plated

028

Code	Radiator connection	Pipe connection	Kvs (m^3/h)		
223302	3/8″ M	23 p. 1,5	1,09	10	50
223402	1/2″ M	23 p. 1,5	1,52	10	50



226

Double-angled thermostatic radiator valve fitted for thermostatic control heads and thermo-electric actuators.
Right-hand version.
For copper, simple plastic and multi-layer plastic pipes.

Maximum working pressure: 10 bar
Medium temperature range: 5–100 °C
Material: brass
Finish: chrome plated

028

Code	Radiator connection	Pipe connection	Kvs (m^3/h)		
226312	3/8″ M	23 p. 1,5	0,96	1	20
226412	1/2″ M	23 p. 1,5	1,40	1	20



226

Double-angled thermostatic radiator valve fitted for thermostatic control heads and thermo-electric actuators.
Left-hand version.
For copper, single and multilayer plastic pipes.

Maximum working pressure: 10 bar
Medium temperature range: 5–100 °C
Material: brass
Finish: chrome plated

028

Code	Radiator connection	Pipe connection	Kvs (m^3/h)		
226322	3/8″ M	23 p. 1,5	0,96	1	20
226422	1/2″ M	23 p. 1,5	1,40	1	20



227

Thermostatic radiator valve fitted for thermostatic and electronic control heads, thermo-electric actuators. Reverse version.
For copper, single and multilayer plastic pipes.

Maximum working pressure: 10 bar
Medium temperature range: 5–100 °C
Material: brass
Finish: chrome plated

028

Code	Radiator connection	Pipe connection	Kvs (m^3/h)		
227402	1/2″ M	23 p. 1,5	1,39	1	20

The EN 215 certification covers the combination of codes 200000/200001 and 201, 204 series thermostatic control heads with valves 220, 221, 222, 223, 224, 225, 226 and 227 series.

Thermostatic valves for steel pipes



220

Thermostatic radiator valve fitted for thermostatic and electronic control heads, thermo-electric actuators. Angled version.
For steel pipes.

Maximum working pressure: 10 bar
Medium temperature range: 5–100 °C
Material: brass
Finish: chrome plated

028

Code	Radiator connection	Pipe connection	Notes	Kvs (m^3/h)		
220302	3/8″ M	3/8″ F	-	2,29	10	50
220402	1/2″ M	1/2″ F	-	2,39	10	50
220500	3/4″ M	Rp 3/4″ F	without rubber seal	3,19	5	25



221

Thermostatic radiator valve fitted for thermostatic and electronic control heads, thermo-electric actuators. Straight version.
For steel pipes.

Maximum working pressure: 10 bar
Medium temperature range: 5–100 °C
Material: brass
Finish: chrome plated

028

Code	Radiator connection	Pipe connection	Notes	Kvs (m^3/h)		
221302	3/8″ M	Rp 3/8″ F	-	1,09	10	50
221402	1/2″ M	Rp 1/2″ F	-	1,52	10	50
221500	3/4″ M	3/4″ F	without rubber seal	2,20	5	25



225

Double angled thermostatic radiator valve fitted for thermostatic and electronic control heads, thermo-electric actuators.
Right-hand version.
For steel pipes.

Maximum working pressure: 10 bar
Medium temperature range: 5–100 °C
Material: brass
Finish: chrome plated

028

Code	Radiator connection	Pipe connection	Kvs (m^3/h)		
225312	3/8″ M	Rp 3/8″ F	0,96	1	20
225412	1/2″ M	Rp 1/2″ F	1,40	1	20



225

Double angled thermostatic radiator valve fitted for thermostatic and electronic control heads, thermo-electric actuators.
Left-hand version.
For steel pipes.

Maximum working pressure: 10 bar
Medium temperature range: 5–100 °C
Material: brass
Finish: chrome plated

028

Code	Radiator connection	Pipe connection	Kvs (m^3/h)		
225322	3/8″ M	3/8″ F	0,96	1	20
225422	1/2″ M	1/2″ F	1,40	1	20



224

Thermostatic radiator valve fitted for thermostatic and electronic control heads, thermo-electric actuators. Reverse version.
For steel pipes.

Maximum working pressure: 10 bar
Medium temperature range: 5–100 °C
Material: brass
Finish: chrome plated

028

Code	Radiator connection	Pipe connection	Kvs (m^3/h)		
224302	3/8″ M	Rp 3/8″ F	0,93	1	20
224402	1/2″ M	Rp 1/2″ F	1,39	1	20

The EN 215 certification covers the combination of codes 200000/200001 and 201, 204 series thermostatic control heads with valves 220, 221, 222, 223, 224, 225, 226 and 227 series.

Dynamic thermostatic radiator valves for copper pipes



232 DYNAMICAL®

Dynamic thermostatic radiator valve fitted for thermostatic and electronic control heads, thermo-electric actuators. Angled version.
For copper, single and multilayer plastic pipes.
PATENT

Maximum working pressure: 10 bar
Medium temperature range: 5–95 °C
Material: brass
Finish: chrome plated

Code	Radiator connection	Pipe connection	Notes	Flow rate regulation (l/h)		
232302	3/8″ M	23 p. 1,5	-	20–120	10	50
232402	1/2″ M	23 p. 1,5	-	20–120	10	50
232412	1/2″ M	23 p. 1,5	low flow version	10–80	10	50



233 DYNAMICAL®

Dynamic thermostatic radiator valve fitted for thermostatic and electronic control heads, thermo-electric actuators. Straight version.
For copper, single and multilayer plastic pipes.
PATENT

Maximum working pressure: 10 bar
Medium temperature range: 5–95 °C
Material: brass
Finish: chrome plated

Code	Radiator connection	Pipe connection	Notes	Flow rate regulation (l/h)		
233302	3/8″ M	23 p. 1,5	-	20–120	10	50
233402	1/2″ M	23 p. 1,5	-	20–120	10	50
233412	1/2″ M	23 p. 1,5	low flow version	10–80	10	50



237 DYNAMICAL®

Dynamic thermostatic radiator valve fitted for thermostatic and electronic control heads, thermo-electric actuators. Reverse version.
For copper, single and multilayer plastic pipes.
PATENT

Maximum working pressure: 10 bar
Medium temperature range: 5–95 °C
Material: brass
Finish: chrome plated

Code	Radiator connection	Pipe connection	Flow rate regulation (l/h)		
237302	3/8″ M	23 p. 1,5	20–120	5	25
237402	1/2″ M	23 p. 1,5	20–120	5	25

Dynamic thermostatic radiator valves for steel pipes



230 DYNAMICAL®

Dynamic thermostatic radiator valve fitted for thermostatic and electronic control heads, thermo-electric actuators. Angled version.
For steel pipe.
PATENT

Maximum working pressure: 10 bar
Medium temperature range: 5–95 °C
Material: brass
Finish: chrome plated

Code	Radiator connection	Pipe connection	Notes	Flow rate regulation (l/h)		
230302	3/8″ M	3/8″ F	-	20–120	10	50
230312	3/8″ M	3/8″ F	low flow version	10–80	10	50
230402	1/2″ M	1/2″ F	-	20–120	10	50
230412	1″ M	1/2″ F	low flow version	10–80	10	50
230500	3/4″ M	3/4″ F	without rubber seal	20–120	5	25



231 DYNAMICAL®

Dynamic thermostatic radiator valve fitted for thermostatic and electronic control heads, thermo-electric actuators. Straight version.
For steel pipe.
PATENT

Maximum working pressure: 10 bar
Medium temperature range: 5–95 °C
Material: brass
Finish: chrome plated

Code	Radiator connection	Pipe connection	Notes	Flow rate regulation (l/h)		
231302	3/8″ M	3/8″ F	-	20–120	10	50
231312	3/8″ M	3/8″ F	low flow version	10–80	10	50
231402	1/2″ M	1/2″ F	-	20–120	10	50
231412	1/2″ M	1/2″ F	low flow version	10–80	10	50
231500	3/4″ M	3/4″ F	without rubber seal	20–120	5	25



234 DYNAMICAL®

Dynamic thermostatic radiator valve fitted for thermostatic and electronic control heads, thermo-electric actuators. Reverse version.
For steel pipe.
PATENT

Maximum working pressure: 10 bar
Medium temperature range: 5–95 °C
Material: brass
Finish: chrome plated

Code	Radiator connection	Pipe connection	Flow rate regulation (l/h)		
234302	3/8″ M	3/8″ F	20–120	5	25
234402	1/2″ M	1/2″ F	20–120	5	25

LOCKSHIELD VALVES

Lockshield valves for copper pipes



342

Lockshield valve. Angled.
For copper, plastic and multi-layer plastic pipe.

Maximum working pressure: 10 bar
Medium temperature range: 5–100 °C
Material: brass
Finish: chrome plated

Code	Radiator connection	Pipe connection	Kvs (m^3/h)		
342302	3/8″ M	23 p. 1,5	2,42	10	50
342402	1/2″ M	23 p. 1,5	3,99	10	50
342452	1/2″ M	3/4″ M	3,99	10	50



343

Lockshield valve. Straight.

Maximum working pressure: 10 bar
Medium temperature range: 5–100 °C
Material: brass
Finish: chrome plated

Code	Radiator connection	Pipe connection	Kvs (m^3/h)		
343302	3/8″ M	23 p. 1,5	1,32	10	50
343402	1/2″ M	23 p. 1,5	2,17	10	50
343452	1/2″ M	3/4″ M	2,17	10	50



226

Double-angled lockshield valve.
Right-hand version.
For copper, simple plastic and multi-layer plastic pipes.

Maximum working pressure: 10 bar
Medium temperature range: 5–100 °C
Material: brass
Finish: chrome plated

Code	Radiator connection	Pipe connection	Kvs (m^3/h)		
226352	3/8″ M	23 p. 1,5	1,35	1	20
226452	1/2″ M	23 p. 1,5	1,40	1	20



226

Double-angled lockshield valve.
Left-hand version.
For copper, simple plastic and multi-layer plastic pipes.

Maximum working pressure: 10 bar
Medium temperature range: 5–100 °C
Material: brass
Finish: chrome plated

Code	Radiator connection	Pipe connection	Kvs (m^3/h)		
226362	3/4″ M	23 p. 1,5	1,35	1	20
226462	1/2″ M	23 p. 1,5	1,40	1	20

Lockshield valves for steel pipes



431

Lockshield valve. Angled.
For steel pipe.

Maximum working pressure: 10 bar
Medium temperature range: 5–100 °C
Material: brass
Finish: chrome plated

Code	Radiator connection	Pipe connection	Notes	Kvs (m^3/h)		
431302	3/8″ M	3/8″ F	-	2,42	10	50
431402	1/2″ M	1/2″ F	-	3,99	10	50
431503	3/4″ M	3/4″ F	without rubber seal	4,52	5	25
431603	1″ M	1″ F	without rubber seal	5,64	5	25



432

Lockshield valve. Straight.
For steel pipes.

Maximum working pressure: 10 bar
Medium temperature range: 5–100 °C
Material: brass
Finish: chrome plated

Code	Radiator connection	Pipe connection	Notes	Kvs (m^3/h)		
432302	3/8″ M	3/8″ F	-	1,32	10	50
432402	1/2″ M	1/2″ F	-	2,17	10	50
432503	3/4″ M	3/4″ F	without rubber seal	2,58	5	25
432603	1″ M	1″ F	without rubber seal	4,81	5	25



225

Double-angled lockshield valve. Right-hand version.
For steel pipes.

Maximum working pressure: 10 bar
Medium temperature range: 5–100 °C
Material: brass
Finish: chrome plated

Code	Radiator connection	Pipe connection	Kvs (m^3/h)		
225352	3/8″ M	3/8″ F	1,05	1	20
225452	1/2″ M	1/2″ F	1,40	1	20



225

Double-angled lockshield valve. Left-hand version.
For steel pipes.

Maximum working pressure: 10 bar
Medium temperature range: 5–100 °C
Material: brass
Finish: chrome plated

Code	Radiator connection	Pipe connection	Kvs (m^3/h)		
225362	3/8″ M	3/8″ F	1,05	1	20
225462	1/2″ M	1/2″ F	1,40	1	20

THERMOSTATIC CONTROL HEADS

Thermostatic control heads with built-in sensor



200

Thermostatic control head for convertible radiator valves, built-in sensor with liquid-filled element.
Graduated scale from ❄ to 5 corresponding to a temperature adjustment range from 7 °C to 28 °C.
With adapter.

Code		
200000	10	50



200

Thermostatic control head for convertible radiator valves, built-in sensor with liquid-filled element.
Graduated scale from ❄ to 5 corresponding to a temperature adjustment range from 7 °C to 28 °C.

Code		
200001	1	10



204

Thermostatic control head for convertible radiator valves.
Built-in sensor with liquid-filled element.
Graduated scale from ❄ to 5 corresponding to a temperature adjustment range from 7 °C to 28 °C.
With adapter.

Code		
204000	10	50



202

Thermostatic control head for radiator valves, built-in sensor with liquid-filled element.
With LCD type ambient temperature indicator.
Graduated scale from ❄ to 5 corresponding to a temperature adjustment range from 7 °C to 28 °C.
Ambient temperature indicator from 16 °C to 26 °C.
With adapter.
PATENT

Code		
202000	1	5

For 338, 339, 401, 402, 425, 426, 421, 422, 455, 456, 230, 231, 232, 233, 234, 237, 220, 221, 222, 223, 224, 225, 226 and 227 series valves.

Thermostatic control heads with remote sensor



201

Thermostatic control head for thermostatic and convertible radiator valves, with remote sensor.
Graduated scale from ❄ to 5 corresponding to a temperature adjustment range from 7 °C to 28 °C.
With adapter.

Capillary length: 2 m

Code		
201000	1	10



204

Thermostatic control head for thermostatic and convertible radiator valves.
With remote sensor.
Graduated scale from ❄ to 5 corresponding to a temperature adjustment range from 7 °C to 28 °C.
With adapter.

Capillary length: 2 m

Code		
204100	1	10

For 338, 339, 401, 402, 425, 426, 421, 422, 455, 456, 230, 231, 232, 233, 234, 237, 220, 221, 222, 223, 224, 225, 226 and 227 series valves.

Thermostatic control heads with contact probe



203

Thermostatic control head for thermostatic and convertible radiator valves; with contact probe, for medium temperature limiting.
With adapter.

Capillary length: 2 m

Code	Medium temperature range (°C)		
203502	20–50	1	25
203702	40–90	1	-

For valves 220, 221, 222, 223, 224, 225, 226, 227, 338, 339, 401, 402 and 455 series.

Thermostatic control head with remote adjusting knob



472

Thermostatic control head with remote adjusting knob, liquid-filled element.

Capillary length: 2 m

Code		
472000	1	-

Accessories for thermostatic control heads



209

Tamper-proof anti-theft cap for use in public places.
To be used with special allen key code 209001.
For thermostatic control heads 200, 204, 202 and 205 series.

Finish: white

Code	Article use		
209000	205005	1	10



209

Tamper-proof anti-theft cap for use in public places.
For thermostatic control heads 200 series.
To be used with special allen key code 209001.

Finish: chrome plated

Code	Article use		
209004	200015	1	10



209

Special allen key for tamper-proof anti-theft cap.
To be used with tamper-proof cap 209 series.

Code	Article use		
209001	205005, 205025, 200015	1	-



475

Contact probe mounting bracket.
For thermostatic control heads 203 series.

Code			
475001		1	-



475

Probe pocket.
For thermostatic control heads 203 series.

Code	Article use		
475002	203502	1	-
475003	203702	1	-

MANUAL RADIATOR VALVES

Radiator valves for copper pipes



340

Manual radiator valve. Angled version.
For copper, plastic and multilayer plastic pipes.

Maximum working pressure: 10 bar
Medium temperature range: 5–100 °C
Material: brass
Finish: chrome plated

Code	Radiator connection	Pipe connection	Kv (m^3/h)		
340302	3/8″ M	23 p. 1,5	2,42	10	50
340402	1/2″ M	23 p. 1,5	3,99	10	50
340452	1/2″ M	3/4″ M	3,99	10	50



341

Manual radiator valve. Straight version.
For copper, plastic and multilayer plastic pipes.

Maximum working pressure: 10 bar
Medium temperature range: 5–100 °C
Material: brass
Finish: chrome plated

Code	Radiator connection	Pipe connection	Kv (m^3/h)		
341302	3/8″ M	23 p. 1,5	1,32	10	50
341402	1/2″ M	23 p. 1,5	2,17	10	50

Radiator valves for steel pipes



411

Manual radiator valve. Angled version.
For steel pipe.

Maximum working pressure: 10 bar
Medium temperature range: 5–100 °C
Material: brass
Finish: chrome plated

Code	Radiator connection	Pipe connection	Notes	Kv (m^3/h)		
411302	3/8″ M	3/8″ F	-	2,42	10	50
411402	1/2″ M	1/2″ F	-	3,99	10	50
411422	1/2″ M	1/2″ F	with chrome plated knob	3,99	10	50



412

Manual radiator valve. Straight version.
For steel pipe.

Maximum working pressure: 10 bar
Medium temperature range: 5–100 °C
Material: brass
Finish: chrome plated

Code	Radiator connection	Pipe connection	Notes	Kv (m^3/h)		
412302	3/8″ M	3/8″ F	-	1,32	10	50
412402	1/2″ M	1/2″ F	-	2,17	10	50
412422	1/2″ M	1/2″ F	with chrome plated knob	2,17	10	50
412503	3/4″ M	3/4″ F	without rubber seal	2.58	5	25

Lockshield valves for copper pipes



342

Lockshield valve. Angled.
For copper, plastic and multi-layer plastic pipe.

Maximum working pressure: 10 bar
Medium temperature range: 5–100 °C
Material: brass
Finish: chrome plated

Code	Radiator connection	Pipe connection	Kvs (m^3/h)		
342302	3/8″ M	23 p. 1,5	2,42	10	50
342402	1/2″ M	23 p. 1,5	3,99	10	50
342452	1/2″ M	3/4″ M	3,99	10	50



343

Lockshield valve. Straight.

Maximum working pressure: 10 bar
Medium temperature range: 5–100 °C
Material: brass
Finish: chrome plated

Code	Radiator connection	Pipe connection	Kvs (m^3/h)		
343302	3/8″ M	23 p. 1,5	1,32	10	50
343402	1/2″ M	23 p. 1,5	2,17	10	50

Lockshield valves for steel pipes



431

Lockshield valve. Angled.
For steel pipe.

Maximum working pressure: 10 bar
Medium temperature range: 5–100 °C
Material: brass
Finish: chrome plated

Code	Radiator connection	Pipe connection	Notes	Kvs (m^3/h)		
431302	3/8″ M	3/8″ F	-	2,42	10	50
431402	1/2″ M	1/2″ F	-	3,99	10	50
431422	1/2″ M	1/2″ F	with chrome plated knob	3,99	10	50
431503	3/4″ M	3/4″ F	without rubber seal	4,52	5	25
431603	1″ M	1″ F	without rubber seal	5,64	5	25



432

Lockshield valve. Straight.
For steel pipes.

Maximum working pressure: 10 bar
Medium temperature range: 5–100 °C
Material: brass
Finish: chrome plated

Code	Radiator connection	Pipe connection	Notes	Kvs (m^3/h)		
432302	3/8″ M	3/8″ F	-	1,32	10	50
432402	1/2″ M	1/2″ F	-	2,17	10	50
432422	1/2″ M	1/2″ F	with chrome plated knob	2,17	10	50
432503	3/4″ M	3/4″ F	without rubber seal	2,58	5	25
432603	1″ M	1″ F	without rubber seal	4,81	5	25

REMOTE THERMAL REGULATION SYSTEM (CALEFFI CODE®)

Remote thermal regulation system, white



215 CALEFFI CODE®

Comfort control
Wireless electronic control for thermostatic or convertible radiator valves.
Operates through Gateway, Gateway PRO, app CALEFFI CODE® and front buttons.
Built-in temperature sensor.
Quick-coupling installation with adapter.
Compatible with rechargeable batteries.
REGISTERED DESIGN.
Complete with 2 x 1,5 V AA batteries (included in pack).

Ambient temperature range: 0–55 °C
Electric supply: with battery (2 x 1,5V)
Protection class: IP 30
Finish: white
Transmission radio frequency: RF 868 MHz radio

CE

Code		
215510	1	20



215 CALEFFI CODE®

Sensor/ Sensor PRO
Sensor Wireless ambient temperature, **PRO version with boiler contact**.
Complete with 2 x 1,5 V AAA batteries (included in pack).
Operates through Gateway, Gateway PRO and the CALEFFI CODE® app.
Compatible with rechargeable batteries.
REGISTERED DESIGN

Ambient temperature range: 0–55 °C
Electric supply: with battery (2 x 1,5V)
Protection class: IP 30
Finish: white
Transmission radio frequency: RF 868 MHz radio

CE

Code	Notes		
215001	**Sensor**	1	20
215002	Sensor PRO with boiler contact	1	20

Ambient temperature Sensor/Sensor PRO is mandatory for application with Caleffi single-pipe valves.



215 CALEFFI CODE®

Gateway / Gateway PRO
Wireless multi-zone temperature regulation gateway, **PRO version with built-in GSM, UMTS, LTE modem**.
Operation through the CALEFFI CODE® app (Wi-Fi or Ethernet and Bluetooth® connectivity required for installation).
Quick functions: Auto - Eco - Holiday - Manual - OFF - Boost - Clean.
Weekly programming.
Programmable time bands, up to 8 per day.
Programmable zones: up to 64.
Compatible with OpenTherm ® connectivity.
Ecodesign Directive Class: IV-VIII
Electric supply with USB type C power supply unit, 5 V (DC), 2 A, input 100–240 V, 0,5 A, 50/ 60 Hz, output 5 V, 2 A (EN/IEC 61558-2- 16).
REGISTERED DESIGN.

Ambient temperature range: 0–40 °C
Protection class: IP 30
Contact rating (24 V): 1 A
Finish: white
Transmission radio frequency: Wi-Fi, RF 868 MHz radio, 2.4 GHz

CE

Code	Notes		
215100	**Gateway**	1	12
215015	**Gateway PRO** with built-in GSM, UMTS, LTE modem.	1	12

Scarica su App Store
DISPONIBILE SU Google Play

Compatible with:
amazon alexa
Google Home

REMOTE THERMAL REGULATION SYSTEM
The CALEFFI CODE® system guarantees more efficient management of the heating system, giving the user greater savings and the possibility of modifying the programming at any time and from anywhere according to actual needs.
Suitable for managing an independent residence or a unit in an apartment block.

CALEFFI CODE® App
The system is configured and managed exclusively through the CALEFFI CODE® app for smartphones and tablets (Android® or iOS®) with available internet and Bluetooth® connections.
The system can be controlled by two devices simultaneously, with the CALEFFI CODE® App installed on each device.

Remote thermal regulation system, black



215 CALEFFI CODE®

Comfort control.
Wireless electronic control for thermostatic or convertible radiator valves.
Complete with 2 x 1,5 V AA batteries (included in pack).
Operates through Gateway, Gateway PRO, app CALEFFI CODE® and front buttons.
Built-in temperature sensor.
Compatible with rechargeable batteries.
REGISTERED DESIGN.

Ambient temperature range: 0–55 °C
Electric supply: with battery (2 x 1,5V)
Protection class: IP 30
Transmission radio frequency: RF 868 MHz radio

CE

Code		
215510 BLK	1	20



215 CALEFFI CODE®

Sensor / Sensor PRO
Sensor Wireless ambient temperature sensor, PRO version with boiler contact.
Complete with 2 x 1,5 V AAA batteries (included in pack).
Operates through Gateway, Gateway PRO and the CALEFFI CODE® app.
Compatible with rechargeable batteries.
REGISTERED DESIGN.

Ambient temperature range: 0–55 °C
Electric supply: with battery (2 x 1,5V)
Protection class: IP 30
Finish: black
Transmission radio frequency: RF 868 MHz radio

CE

Code	Notes		
215001 BLK	**Sensor**	1	20
215002 BLK	**Sensor PRO** with boiler contact	1	20

Ambient temperature Sensor/Sensor PRO is mandatory for application with Caleffi single-pipe valves.

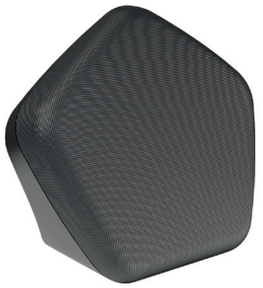

215 CALEFFI CODE®

Gateway / Gateway PRO
Wireless multi-zone temperature regulation gateway, **PRO version with built-in GSM, UMTS, LTE modem**.
Operation through the CALEFFI CODE® app (Wi-Fi or Ethernet and Bluetooth® connectivity required for installation).
Quick functions: Auto - Eco - Holiday - Manual - OFF - Boost - Clean.
Weekly programming.
Programmable time bands, up to 8 per day.
Programmable zones: up to 64.
Compatible with OpenTherm ® connectivity.
Ecodesign Directive Class: IV-VIII
REGISTERED DESIGN.
Electric supply with USB type C power supply unit, 5 V (DC), 2 A, input 100–240 V, 0,5 A, 50/ 60 Hz, output 5 V, 2 A (EN/IEC 61558-2- 16).

Ambient temperature range: 0–40 °C
Protection class: IP 30
Contact rating (24 V): 1 A
Finish: black
Transmission radio frequency: Wi-Fi, 2.4 GHz, RF 868 MHz radio

CE

Code	Notes		
215100 BLK	**Gateway**	1	12
215015 BLK	**Gateway PRO** with built-in GSM, UMTS, LTE modem.	1	12

Accessories for CALEFFI CODE



210

Accessories for thermal regulation electronic system 215 series.

Code		
210005	1	10



210

Adapters for thermostatic and convertibles valves not produced by our company.
For RBM - Heimeier - Tiemme - Watts thermostatic valves with M30x1.5mm connection, use the adapter provided.

Code	Notes		
210051	for Giacomini valves	1	-
210052	for FAR valves	1	-
210053	for RBM-Heimeier-Tiemme-Watts valves	1	-
F0001597	for Danfoss valves RA-DV DN15	10	-

Not suitable for use with one-pipe valves not produced by Caleffi.

CONVERTIBLE RADIATOR VALVES, CONTROL HEAD AND LOCKSHIELD VALVES HIGH-STYLE

Convertible radiator valves, white finish

4001

High-Style convertible radiator valves.
Complete with:
- angled-convertible radiator valve fitted for thermostatic and thermo-electric control heads;
- angled lockshield valve;
- two pipe-covering/ wall-covering shells and allen key.

To be used with fittings 437, 447, 681 and 679 series.

Maximum working pressure: 10 bar
Medium temperature range: 5–100 °C
Material: brass
Finish: white



Code	Radiator connection	Pipe connection	Kv valve (m^3/h)	Kv lockshield valve (m^3/h)		
400101	1/2″ M	23 p. 1,5	2,0	1,92	1	5

4003

High-Style convertible radiator valves and lockshield valves for designer radiators. Double-angled. **Right-hand version**.
Complete with:
- double-angled convertible radiator valve fitted for thermostatic and thermo-electric control heads;
- lockshield valve, double-angled connections;
- two pipe-covering/wall-covering shells and allen key.

To be used with fittings 437, 447, 681 and 679 series.

Maximum working pressure: 10 bar
Medium temperature range: 5–100 °C
Material: brass
Finish: white



Code	Radiator connection	Pipe connection	Kv valve (m^3/h)	Kv lockshield valve (m^3/h)		
400301	1/2″ M	23 p. 1,5	1,27	1,37	1	5

4004

High-Style convertible radiator valves and lockshield valves for designer radiators. Double-angled. **Left-hand version**.
Complete with:
- double-angled convertible radiator valve fitted for thermostatic and thermo-electric control heads;
- lockshield valve, double-angled connections;
- two pipe-covering/wall-covering shells and allen key.

To be used with fittings 437, 447, 681 and 679 series.

Maximum working pressure: 10 bar
Medium temperature range: 5–100 °C
Material: brass
Finish: white



Code	Radiator connection	Pipe connection	Kv valve (m^3/h)	Kv lockshield valve (m^3/h)		
400401	1/2″ M	23 p. 1,5	1,27	1,37	1	5

Example of HIGH-STYLE valve installation for designer heating systems with central connection, left-hand version, with thermostatic control head.

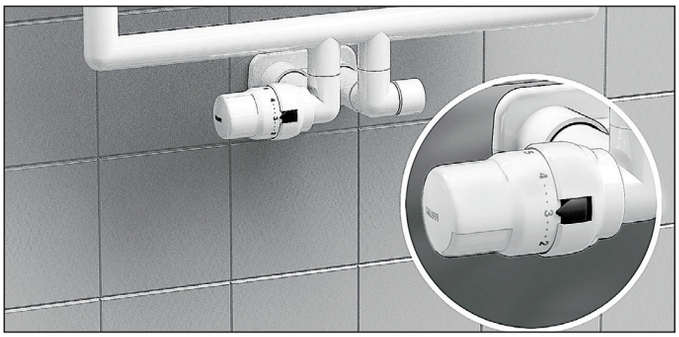

Example of HIGH-STYLE valve installation for designer heating systems, right-hand version, with thermostatic control head

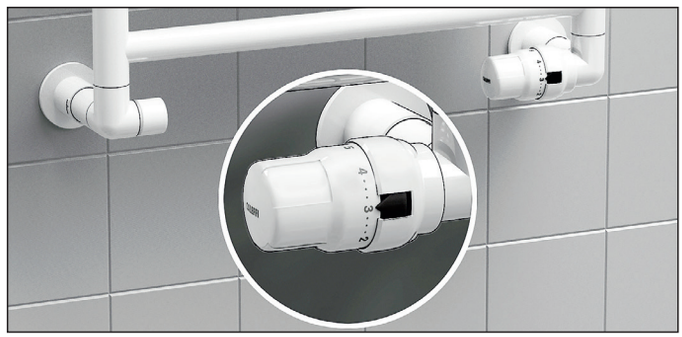

4003

High-Style convertible radiator valves and lockshield valves for designer radiators. With central connections. **Right-hand version**.
Complete with:
- double-angled convertible radiator valve fitted for thermostatic control head code 200015;
- lockshield valve, double angled connections;
- pipe-covering/wall-covering shell, connections: 50 mm centre distance.

To be used with fittings 437, 447, 681 and 679 series.

Maximum working pressure: 10 bar
Medium temperature range: 5–100 °C
Material: brass
Finish: white



Code	Radiator connection	Pipe connection	Kv valve (m^3/h)	Kv lockshield valve (m^3/h)		
400311	1/2″ M	23 p. 1,5	1,27	1,37	1	5

4004

High-Style convertible radiator valves and lockshield valves for designer radiators. With central connections. **Left-hand version**.
Complete with:
- double-angled convertible radiator valve fitted for thermostatic and thermo-electric control heads;
- lockshield valve, double angled connections;
- pipe-covering/wall-covering shell, connections: 50 mm centre distance.

To be used with fittings 437, 447, 681 and 679 series.

Maximum working pressure: 10 bar
Medium temperature range: 5–100 °C
Material: brass
Finish: white



Code	Radiator connection	Pipe connection	Kv valve (m^3/h)	Kv lockshield valve (m^3/h)		
400411	1/2″ M	23 p. 1,5	1,27	1,37	1	5

Example of HIGH-STYLE valve installation for designer heating systems with central connection, left-hand version, with electronic control.



Control head for convertible radiator valves, white finish



205

Thermostatic control head for designer heating system valves, built-in sensor with liquid-filled element.
Graduated adjustment scale from ❄ to 5, corresponding to a temperature range of 7°C to 28°C.
With adapter, anti-tamper and key to lock the cap.

Finish: white

Code		
205005	1	5



205

Thermostatic control head for designer heating system valves, built-in sensor with liquid-filled element.
Graduated adjustment scale from ❄ to 5, corresponding to a temperature range of 7°C to 28°C.
With adapter.

Finish: white

Code		
205000	1	10



209

Tamper-proof anti-theft cap for use in public places.
To be used with special allen key code 209001.
For thermostatic control heads 200, 204, 202 and 205 series.

Finish: white

Code	Article use		
209000	205005	1	10



209

Special allen key for tamper-proof anti-theft cap.
To be used with tamper-proof cap 209 series.

Code	Article use		
209001	205005, 205025, 200015	1	-

Convertible radiator valves, black finish

4001

High-Style convertible radiator valves and lockshield valves for designer radiators.
Complete with:
- angled-convertible radiator valve fitted for thermostatic and thermo-electric control heads;
- angled lockshield valve;
- two pipe-covering/ wall-covering shells and allen key.
Connectable with fittings 437, 447, 681 and 679 series.

Maximum working pressure: 10 bar
Medium temperature range: 5–100 °C
Material: brass
Finish: black



Code	Radiator connection	Pipe connection	Kv valve (m^3/h)	Kv lockshield valve (m^3/h)		
400103	1/2″ M	23 p. 1,5	2,0	1,92	1	5

4003

High-Style convertible radiator valves and lockshield valves for designer radiators. Double-angled. **Right-hand version**.
Complete with:
- double-angled convertible radiator valve fitted for thermostatic and thermo-electric control heads;
- lockshield valve, double-angled connections;
- two pipe-covering/wall-covering shells and allen key.
Connectable with fittings 437, 447, 681 and 679 series.

Maximum working pressure: 10 bar
Medium temperature range: 5–100 °C
Material: brass
Finish: black



Code	Radiator connection	Pipe connection	Kv valve (m^3/h)	Kv lockshield valve (m^3/h)		
400303	1/2″ M	23 p. 1,5	1,27	1,37	1	5

4004

High-Style convertible radiator valves and lockshield valves for designer radiators. Double-angled. **Left-hand version**.
Complete with:
- double-angled convertible radiator valve fitted for thermostatic and thermo-electric control heads;
- lockshield valve, double-angled connections;
- two pipe-covering/wall-covering shells and allen key.
To be used with fittings 437, 447, 681 and 679 series.

Maximum working pressure: 10 bar
Medium temperature range: 5–100 °C
Material: brass
Finish: black



Code	Radiator connection	Pipe connection	Kv valve (m^3/h)	Kv lockshield valve (m^3/h)		
400403	1/2″ M	23 p. 1,5	1,27	1,37	1	5

Example of HIGH-STYLE valve installation for designer heating systems with central connection, left-hand version, with thermostatic control head.

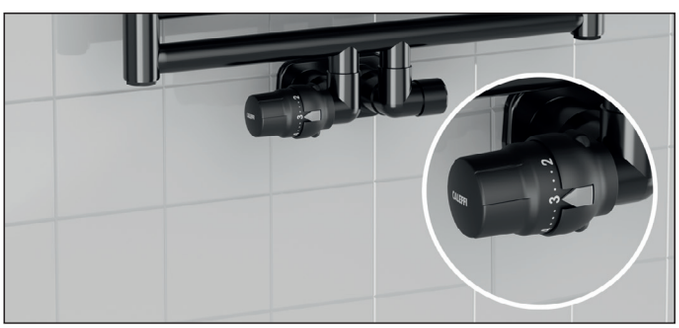

Example of HIGH-STYLE valve installation for designer heating systems, right-hand version, with thermostatic control head



4003

High-Style convertible radiator valves and lockshield valves for designer radiators. With central connections. **Right-hand version**.
Complete with:
- double-angled convertible radiator valve fitted for thermostatic and thermo-electric control heads;
- lockshield valve, double-angled connections;
- pipe-covering/wall-covering shell, connections: 50 mm centre distance.

To be used with fittings 437, 447, 681 and 679 series.

Maximum working pressure: 10 bar
Medium temperature range: 5–100 °C
Material: brass
Finish: black



Code	Radiator connection	Pipe connection	Kv valve (m^3/h)	Kv lockshield valve (m^3/h)		
400313	1/2" M	23 p. 1,5	1,27	1,37	1	5

4004

High-Style convertible radiator valves and lockshield valves for designer radiators. With central connections. **Left-hand version**.
Complete with:
- double-angled convertible radiator valve fitted for thermostatic and thermo-electric control heads;
- lockshield valve, double angled connections;
- pipe-covering/wall-covering shell, connections: 50 mm centre distance.

To be used with fittings 437, 447, 681 and 679 series.

Maximum working pressure: 10 bar
Medium temperature range: 5–100 °C
Material: brass
Finish: black



Code	Radiator connection	Pipe connection	Kv valve (m^3/h)	Kv lockshield valve (m^3/h)		
400413	1/2" M	23 p. 1,5	1,27	1,37	1	5

Example of HIGH-STYLE valve installation for designer heating systems with central connection, left-hand version, with electronic control.

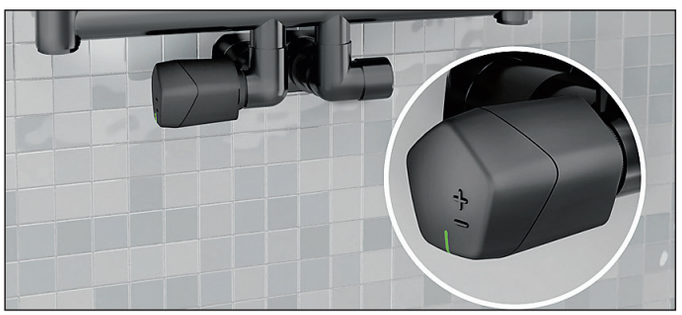

Control head for convertible radiator valves, black finish



205

Thermostatic control head for designer heating system valves. Built-in sensor with liquid-filled element.
Graduated scale from ❄ to 5 corresponding to a temperature adjustment range from 7 °C to 28 °C.
With adapter, tamper-proof cap and special key for tamper-proof cap.

Finish: black

Code		
205025	1	5



205

Thermostatic control head for designer heating systems valves. Built-in sensor with liquid-filled element.
Graduated scale from ❄ to 5 corresponding to a temperature adjustment range from 7 °C to 28 °C.
With adapter.

Finish: black

Code		
205023	1	10



209

Tamper-proof anti-theft cap for use in public places.
For thermostatic control heads 200 series.
To be used with special allen key code 209001.

Finish: black

Code	Article use		
209020	205025	1	10



209

Special allen key for tamper-proof anti-theft cap.
To be used with tamper-proof cap 209 series.

Code	Article use		
209001	205005, 205025, 200015	1	-

Convertible radiator valves, brushed metal finish

4001

High-Style convertible radiator valves.
Complete with:
- angled-convertible radiator valve fitted for thermostatic control head code 200015;
- angled lockshield valve;
- two pipe-covering/ wall-covering shells and allen key.

To be used with fittings 437, 447, 681 and 679 series.

Maximum working pressure: 10 bar
Medium temperature range: 5–100 °C
Material: brass
Finish: brushed metal



Code	Radiator connection	Pipe connection	Kv valve (m^3/h)	Kv lockshield valve (m^3/h)		
400105	1/2″ M	23 p. 1,5	2,0	1,92	1	5

4003

High-Style convertible radiator valves and lockshield valves for designer radiators. Double-angled. **Right-hand version**.
Complete with:
- double-angled convertible radiator valve fitted for thermostatic control head code 200015;
- lockshield valve, double-angled connections;
- two pipe-covering/wall-covering shells and allen key.

To be used with fittings 437, 447, 681 and 679 series.

Maximum working pressure: 10 bar
Medium temperature range: 5–100 °C
Material: brass
Finish: brushed metal



Code	Radiator connection	Pipe connection	Kv valve (m^3/h)	Kv lockshield valve (m^3/h)		
400305	1/2″ M	23 p. 1,5	1,27	1,37	1	5

4004

High-Style convertible radiator valves and lockshield valves for designer radiators. Double-angled. **Left-hand version**.
Complete with:
- double-angled convertible radiator valve fitted for thermostatic control head code 200015;
- lockshield valve, double-angled connections;
- two pipe-covering/wall-covering shells and allen key.

To be used with fittings 437, 447, 681 and 679 series.

Maximum working pressure: 10 bar
Medium temperature range: 5–100 °C
Material: brass
Finish: brushed metal



Code	Radiator connection	Pipe connection	Kv valve (m^3/h)	Kv lockshield valve (m^3/h)		
400405	1/2″ M	23 p. 1,5	1,27	1,37	1	5

Example of HIGH-STYLE valve installation for designer heating systems with central connection, left-hand version, with thermostatic control head.

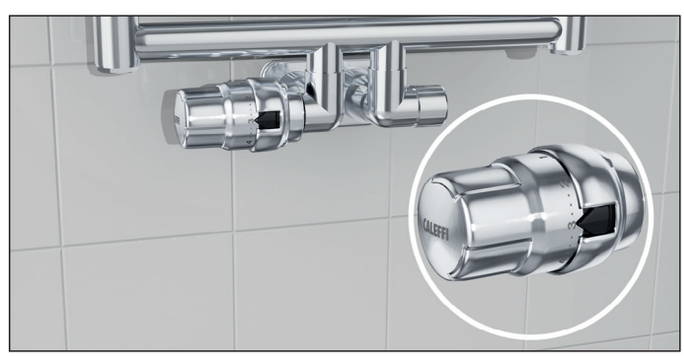

4003

High-Style convertible radiator valves and lockshield valves for designer radiators. With central connections. **Right-hand version**.
Complete with:
- double-angled convertible radiator valve fitted for thermostatic and thermo-electric control heads;
- lockshield valve, double angled connections;
- pipe-covering/wall-covering shell, connections: 50 mm centre distance.

To be used with fittings 437, 447, 681 and 679 series.

Maximum working pressure: 10 bar
Medium temperature range: 5–100 °C
Finish: brushed metal
Material: brass



Code	Radiator connection	Pipe connection	Kv valve (m^3/h)	Kv lockshield valve (m^3/h)		
400315	1/2″ M	23 p. 1,5	1,27	1,37	1	5

4004

High-Style convertible radiator valves and lockshield valves for designer radiators. With central connections. **Left-hand version**.
Complete with:
- double-angled convertible radiator valve fitted for thermostatic control head code 200015;
- lockshield valve, double angled connections;
- pipe-covering/wall-covering shell, connections: 50 mm centre distance.

To be used with fittings 437, 447, 681 and 679 series.

Maximum working pressure: 10 bar
Medium temperature range: 5–100 °C
Material: brass
Finish: brushed metal



Code	Radiator connection	Pipe connection	Kv valve (m^3/h)	Kv lockshield valve (m^3/h)		
400415	1/2″ M	23 p. 1,5	1,27	1,37	1	5

Example of HIGH-STYLE valve installation for designer heating systems, right-hand version, with thermostatic control head

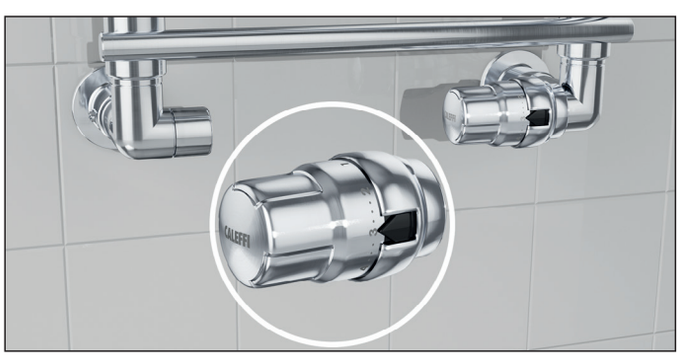

Control head for convertible radiator valves, brushed metal finish



205

Thermostatic control head for designer heating system valves, built-in sensor with liquid-filled element.
Graduated adjustment scale from ❄ to 5, corresponding to a temperature range of 7°C to 28°C.
With adapter, anti-tamper and key to lock the cap.

Finish: brushed metal

Code		
205055	1	5



205

Thermostatic control head for designer heating system valves, built-in sensor with liquid-filled element.
Graduated adjustment scale from ❄ to 5, corresponding to a temperature range of 7°C to 28°C.
With adapter.

Finish: brushed metal

Code		
205053	1	10



209

Tamper-proof anti-theft cap for use in public places.
For thermostatic control heads 200, 204, 202 and 205 series.
To be used with special allen key code 209001.

Finish: brushed metal

Code		
209050	1	10



209

Special allen key for tamper-proof anti-theft cap.
To be used with tamper-proof cap 209 series.

Code	Article use		
209001	205005, 205025, 200015	1	-

Convertible radiator valves, chrome finish

4001

High-Style convertible radiator valves and lockshield valves for designer radiators.
Complete with:
- angled-convertible radiator valve fitted for thermostatic control head code 200015;
- angled lockshield valve;
- two pipe-covering/ wall-covering shells and allen key.
Connectable with fittings 437, 447, 681 and 679 series.

Maximum working pressure: 10 bar
Medium temperature range: 5–100 °C
Material: brass
Finish: chrome plated



Code	Radiator connection	Pipe connection	Kv valve (m^3/h)	Kv lockshield valve (m^3/h)		
400100	1/2″ M	23 p. 1,5	2,0	1,92	1	5

4003

High-Style convertible radiator valves and lockshield valves for designer radiators. Double-angled. **Right-hand version**.
Complete with:
- double-angled convertible radiator valve fitted for thermostatic and thermo-electric control heads;
- lockshield valve, double-angled connections;
- two pipe-covering/wall-covering shells and allen key.
Connectable with fittings 437, 447, 681 and 679 series.

Maximum working pressure: 10 bar
Medium temperature range: 5–100 °C
Material: brass
Finish: chrome plated



Code	Radiator connection	Pipe connection	Kv valve (m^3/h)	Kv lockshield valve (m^3/h)		
400300	1/2″ M	23 p. 1,5	1,27	1,37	1	5

4004

High-Style convertible radiator valves and lockshield valves for designer radiators. Double-angled. **Left-hand version**.
Complete with:
- double-angled convertible radiator valve fitted for thermostatic and thermo-electric control heads;
- lockshield valve, double-angled connections;
- two pipe-covering/wall-covering shells and allen key.
Connectable with fittings 437, 447, 681 and 679 series.

Maximum working pressure: 10 bar
Medium temperature range: 5–100 °C
Material: brass
Finish: chrome plated



Code	Radiator connection	Pipe connection	Kv valve (m^3/h)	Kv lockshield valve (m^3/h)		
400400	1/2″ M	23 p. 1,5	1,27	1,37	1	5

Example of HIGH-STYLE valve installation for designer heating systems, right-hand version, with thermostatic control head

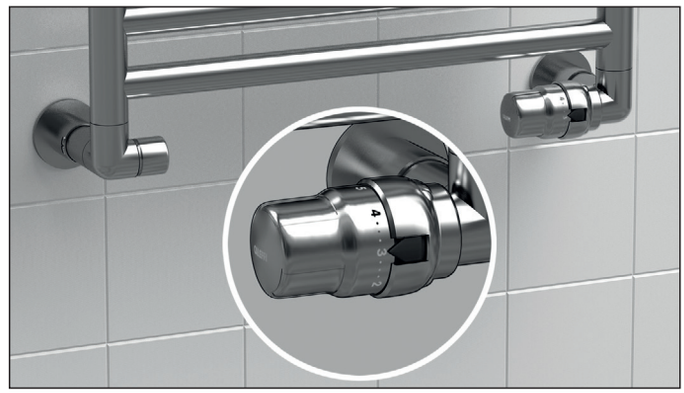

4003

High-Style convertible radiator valves and lockshield valves for designer radiators. With central connections. **Right-hand version**.
Complete with:
- double-angled convertible radiator valve fitted for thermostatic and thermo-electric control heads;
- lockshield valve, double angled connections;
- pipe-covering/wall-covering shell, connections: 50 mm centre distance.

Connectable with fittings 437, 447, 681 and 679 series.

Maximum working pressure: 10 bar
Medium temperature range: 5–100 °C
Material: brass
Finish: chrome plated



Code	Radiator connection	Pipe connection	Kv valve (m^3/h)	Kv lockshield valve (m^3/h)		
400310	1/2" M	23 p. 1,5	1,27	1,37	1	5

4004

High-Style convertible radiator valves and lockshield valves for designer radiators. With central connections. **Left-hand version**.
Complete with:
- double-angled convertible radiator valve fitted for thermostatic and thermo-electric control heads;
- lockshield valve, double angled connections;
- pipe-covering/wall-covering shell, connections: 50 mm centre distance.

Connectable with fittings 437, 447, 681 and 679 series.

Maximum working pressure: 10 bar
Medium temperature range: 5–100 °C
Material: brass
Finish: chrome plated



Code	Radiator connection	Pipe connection	Kv valve (m^3/h)	Kv lockshield valve (m^3/h)		
400410	1/2" M	23 p. 1,5	1,27	1,37	1	5

Example of HIGH-STYLE valve installation for designer heating systems with central connection, left-hand version, with thermostatic control head

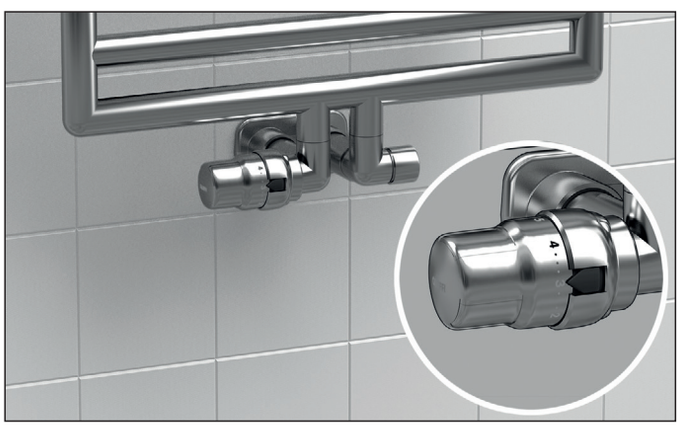

Control head for convertible radiator valves, chrome finish



200

Thermostatic control head for designer heating systems valves, built-in sensor with liquid-filled element.
Graduated scale from ❄ to 5 corresponding to a temperature adjustment range from 7 °C to 28 °C.
With adapter, tamper-proof cap and special key for tamper-proof cap.

Finish: chrome plated

Code		
200015	1	5



200

Thermostatic control head for designer heating systems valves, built-in sensor with liquid-filled element.
Graduated scale from ❄ to 5 corresponding to a temperature adjustment range from 7 °C to 28 °C.
With adapter.

Finish: chrome plated

Code		
200013	1	10



209

Tamper-proof anti-theft cap for use in public places.
For thermostatic control heads 200 series.
To be used with special allen key code 209001.

Finish: chrome plated

Code	Article use		
209004	200015	1	10



209

Special allen key for tamper-proof anti-theft cap.
To be used with tamper-proof cap 209 series.

Code	Article use		
209001	205005, 205025, 200015	1	-

Convertible radiator valve and lockshield valve for heating systems



3380

Convertible radiator valve.
Complete with:
- convertible radiator valve fitted for thermo-electric actuators and thermostatic control heads;
- lockshield valve.
For copper, plastic and multi-layer plastic pipe.
Angled connections.

Maximum working pressure: 10 bar
Medium temperature range: 5–100 °C
Material: brass
Finish: chrome plated

Code	Radiator connection	Pipe connection	Kv valve (m^3/h)		
338040	1/2″ M	23 p. 1,5	2,70	1	5



437

Mechanical fitting.
For soft annealed copper, hard copper and stainless steel pipes. Use w
ith polished chrome plated High-Style valves.
With O-Ring seal.

Maximum working pressure: 10 bar
Medium temperature range: -25–120 °C
Material: brass
Finish: chrome plated

Code	Connection	Pipe diameter		
437112	23 p. 1,5	Ø 12	1	50
437114	23 p. 1,5	Ø 14	1	50
437115	23 p. 1,5	Ø 15	1	50
437116	23 p. 1,5	Ø 16	1	50



681 DARCAL

Self-adjustable diameter fitting for single and multilayer plastic pipes.
Working temperature range 5–80°C (PE-X); 5–75°C (Multi-layer marked 95°C).

Maximum working pressure: 10 bar
Medium temperature range: 5–75 °C
Material: brass
Finish: chrome plated

Code	Connection	Pipe diameter		
681101	23 p. 1,5	Øint. 9,5–10, Øext. 12–14	1	50
681124	23 p. 1,5	Øint. 11,5–12, Øext. 14–16	1	50



383

Fitting for conversion from copper to steel connection.

Code	Connection 1	Connection 2		
383231	23 p.1,5 F	3/8″ F	1	10
383241	23 p.1,5 F	1/2″ F	1	10

Convertible radiator and lockshield valves with push fit connection



338

Convertible radiator valve fitted for thermostatic control heads and thermo-electric actuator.
Push fit connection for Ø 15 hard and annealed copper pipes or for extension code 936415.
Angled version.
With clip connection.

Maximum working pressure: 10 bar
Medium temperature range: 5–100 °C
Material: brass
Finish: chrome plated

Code	Radiator connection	Pipe connection	Kv (m^3/h)		
338415	1/2″ M, Ø 15	1/2″ M, Ø 15	2,7	10	50



342

Lockshield valve.
Push fit connection for Ø 15 hard and annealed copper pipes or for extension code 936415.
Angled version.
With clip connection.

Maximum working pressure: 10 bar
Medium temperature range: 5–100 °C
Material: brass
Finish: chrome plated

Code	Radiator connection	Pipe connection	Kvs (m^3/h)		
342415	1/2″ M, Ø 15	1/2″ M, Ø 15	3,99	10	50

Installation of the valve on the pipe and locking with suitable clamps

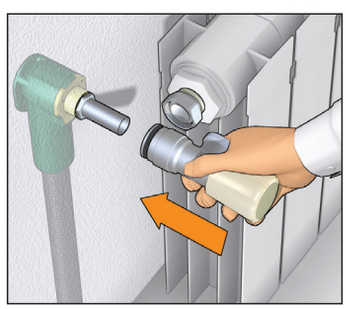

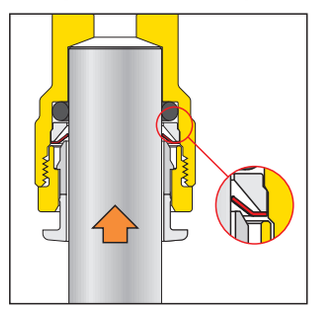

Release by pressing on the outer ring

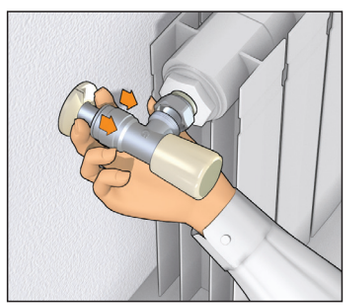

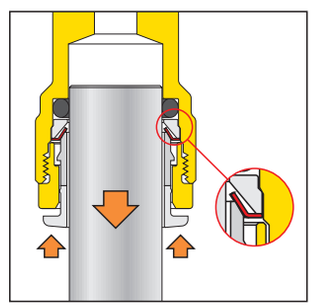

WALL-COVERING PLATES

Single wall-covering plates



4499

Single wall-covering plate.
For pipes with external diameters from 12 to 20 mm.

Finish: white

Code		
449900	1	40



4499

Single wall-covering plate.
For pipes with external diameters from 12 to 20 mm.

Finish: chrome plated

Code		
449910	1	40

Double wall-covering plates

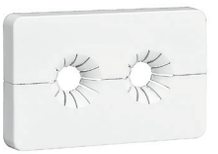

4499

Double wall-covering plate.
For pipes with external diameters from 12 to 20 mm.

Finish: white

Code	Main centre distance (mm)		
449901	35	1	50
449902	40	1	50



4499

Double wall-covering plate.
For pipes with external diameters from 12 to 20 mm.

Finish: chrome plated

Code	Main centre distance (mm)		
449911	35	1	50
449912	40	1	50

RADIATOR VALVES FOR ONE-PIPE AND TWO-PIPE SYSTEMS

Convertible radiator valves for one-pipe and two-pipe designer heating systems



4005

Convertible radiator valve fitted for thermostatic and electronic control heads, thermo-electric actuators. **Right-hand version**.
Factory set for one-pipe systems, adjustable for two-pipe systems.
For copper, single and multilayer plastic pipes.
Flow rate to the radiator:
- with manual control knob: 45 %;
- with thermostatic control head (2K proportional band): 30 %.

Maximum working pressure: 10 bar
Medium temperature range: 5–100 °C
Main centre distance: 40 mm
Material: brass
Finish: chrome plated
Length probe: 40 cm

Code	Radiator connection	Pipe connection	Kv one-pipe (m^3/h)	Kv two-pipe (m^3/h)		
400510	1/2″ M	23 p. 1,5	1,6	0,96	1	5



4005

Convertible radiator valve fitted for thermostatic and electronic control heads, thermo-electric actuators. **Left-hand version**.
Factory set for one-pipe systems, adjustable for two-pipe systems.
For copper, single and multilayer plastic pipes.
Flow rate to the radiator:
- with manual control knob: 45 %;
- with thermostatic control head (2K proportional band): 30 %.

Maximum working pressure: 10 bar
Medium temperature range: 5–100 °C
Main centre distance: 40 mm
Material: brass
Finish: chrome plated
Length probe: 40 cm

Code	Radiator connection	Pipe connection	Kv one-pipe (m^3/h)	Kv two-pipe (m^3/h)		
400520	1/2″ M	23 p. 1,5	1,6	0,96	1	5

One-pipe application

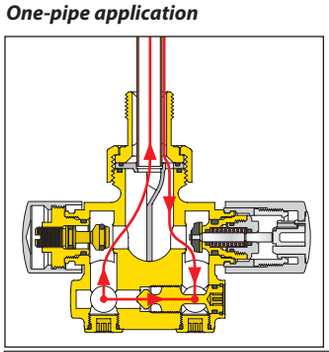

Two-pipe application

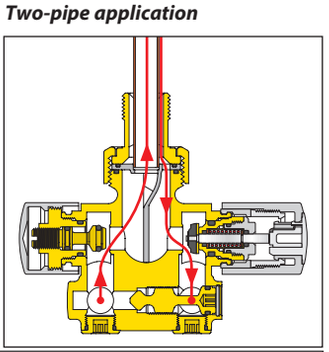

Flow and return connections can be inverted by means of the rotation of the specific deflector.

Convertible radiator valves for one-pipe and two-pipe systems



455

Convertible radiator valve fitted for thermostatic control heads, electronic and thermo-electric actuators.
For copper, simple plastic and multilayer plastic pipes.
Factory set for one-pipe systems, adjustable for two-pipe systems.

Maximum working pressure: 10 bar
Medium temperature range: 5–100 °C
Main centre distance: 40 mm
Material: brass
Finish: chrome plated
Length probe: 30 cm

Code	Radiator connection	Pipe connection	Kv one-pipe (m^3/h)	Kv two-pipe (m^3/h)		
455400	1/2″ M	23 p. 1,5	2,0	1,10	10	-
455500	3/4″ M	23 p. 1,5	2,0	1,10	10	-
455600	1″ M right	23 p. 1,5	2,0	1,10	10	-
455601	1″ M left	23 p. 1,5	2,0	1,10	10	-

Convertible radiator valves for one-pipe systems



456

Convertible radiator valve fitted for thermostatic control heads, electronic and thermo-electric actuators.
For copper, simple plastic and multilayer plastic pipes.
Flow rate to the radiator:
- with manual control knob: 27 %;
- with thermostatic control head (proportional band 2K): 20 %.
For one-pipe systems.
PP probe.

Maximum working pressure: 10 bar
Medium temperature range: 5–100 °C
Main centre distance: 35 mm
Length probe: 33 cm
Material: brass
Finish: chrome plated

Code	Radiator connection	Pipe connection		
456400	1/2″ M	23 p. 1,5	10	-
456500	3/4″ M	23 p. 1,5	10	-

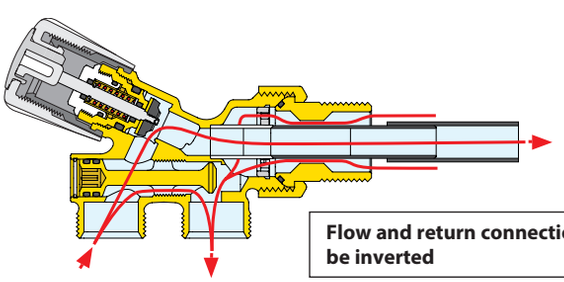

Flow and return connections can be inverted

Manual valve for one-pipe systems



348

Radiator valve for one-pipe systems. With front adjusting handle.
Flow rate to the radiator: 100 %.
Without template and wall-covering plate.
For copper, plastic and multilayer plastic pipes.

Maximum working pressure: 10 bar
Medium temperature range: 5–100 °C
Main centre distance: 40 mm
Length probe: 30 cm
Material: brass
Finish: chrome plated

Code	Radiator connection	Pipe connection	Kv (m^3/h)		
348400	1/2″ M	23 p. 1,5	3,10	10	-
348500	3/4″ M	23 p. 1,5	3,50	10	-



4501

Radiator valve for one-pipe systems.
For copper, plastic and multilayer plastic pipes.
Without template and wall-covering plate.
Flow rate to the radiator: 100 %.

Maximum working pressure: 10 bar
Medium temperature range: 5–100 °C
Main centre distance: 40 mm
Length probe: 30 cm
Material: brass
Finish: chrome plated

Code	Radiator connection	Pipe connection	Kv (m^3/h)		
450140	1/2″ M	23 p. 1,5	3,20	10	-
450150	3/4″ M	23 p. 1,5	3,70	10	-



452

Radiator valve for one-pipe systems.
Complete with:
- template;
- wall-covering plate;
- probe connection.
For outside probe Ø 15 mm (454 Series). For copper, plastic and multilayer plastic pipes.
Wall connections.
Flow rate to the radiator: 50 %.

Maximum working pressure: 10 bar
Medium temperature range: 5–100 °C
Main centre distance: 40 mm
Material: brass
Finish: chrome plated

Code	Radiator connection	Pipe connection	Kv (m^3/h)		
452400	1/2″ M	23 p. 1,5	2,2	1	25



328

Radiator valve for one-pipe systems.
Complete with probe connection.
For outside probe Ø 15 mm (series 454). For copper, plastic and multilayer plastic pipes.
Floor connections.
Flow rates to the radiator: 50%.
Wall connections.

Maximum working pressure: 10 bar
Medium temperature range: 5–100 °C
Main centre distance: 40 mm
Material: brass
Finish: chrome plated

Code	Radiator connection	Pipe connection	Kv (m^3/h)		
328400	1/2″ M	23 p. 1,5	2,2	1	20

Manual valve for two-pipe systems



452

Radiator valve for two-pipe systems.
Complete with:
- template;
- wall-covering plate
- probe connection.
For outside probe Ø 15 mm (Series 454). For copper, plastic and multi-layer plastic pipes.
Wall connections.

Maximum working pressure: 10 bar
Medium temperature range: 5–100 °C
Main centre distance: 40 mm
Material: brass
Finish: chrome plated

Code	Radiator connection	Pipe connection	Kv (m^3/h)		
452401	1/2″ M	23 p. 1,5	1,8	1	25



328

Radiator valve for two-pipe systems.
Complete with probe connection.
For outside probe Ø 15 mm (series 454). For copper, plastic and multilayer plastic pipes.
Floor connections.

Maximum working pressure: 10 bar
Medium temperature range: 5–100 °C
Main centre distance: 40 mm
Material: brass
Finish: chrome plated

Code	Radiator connection	Pipe connection	Kv (m^3/h)		
328401	1/2″ M	23 p. 1,5	1,8	1	20

FITTINGS

Fittings - 23 p. 1.5 threaded connections



679 DARCAL

Fitting for multilayer plastic pipes for continuous high temperature use.

Maximum working pressure: 10 bar
Medium temperature range: 0–95 °C
Finish: chrome plated

Code	Connection	Pipe diameter	Notes		
679014	23 p. 1,5	Ø 14x2	-	10	100
679024	23 p. 1,5	Ø 16x2	-	10	100
679025	23 p. 1,5	Ø 16x2,25	-	10	100
679044	23 p. 1,5	Ø 18x2	-	10	100
679064	23 p. 1,5	Ø 20x2	with metal ring	10	100
679065	23 p. 1,5	Ø 20x2,25	with metal ring	10	100
679066	23 p. 1,5	Ø 20x2,5	with metal ring	10	100
679067	23 p. 1,5	Ø 20x2,9	with metal ring for REHAU pipe (see note *)	10	100

For a correct use, adjust the multilayer pipe diameter before installation using the Caleffi calibrator 679 series.

Note(*): For the use with REHAU pipes, use REHAU's calibrator.

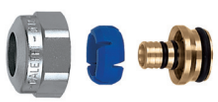

681 DARCAL

Self-adjustable diameter fitting for single and multilayer plastic pipes.
Working temperature range 5–80°C (PE-X); 5–75°C (Multi-layer marked 95°C).

Maximum working pressure: 10 bar

Finish: chrome plated

Code	Connection	Pipe diameter		
681000	23 p. 1,5	Øint. 7,5–8, Øext. 12–14	10	100
681002	23 p. 1,5	Øint. 9–9,5, Øext. 14–16	10	100
681001	23 p. 1,5	Øint. 9,5–10, Øext. 12–14	10	100
681006	23 p. 1,5	Øint. 9,5–10, Øext. 14–16	10	100
681015	23 p. 1,5	Øint. 10,5–11, Øext. 14–16	10	100
681017	23 p. 1,5	Øint. 10,5–11, Øext. 16–18	10	100
681024	23 p. 1,5	Øint. 11,5–12, Øext. 14–16	10	100
681026	23 p. 1,5	Øint. 11,5–12, Øext. 16–18	10	100
681035	23 p. 1,5	Øint. 12,5–13, Øext. 16–18	10	100
681044	23 p. 1,5	Øint. 13,5–14, Øext. 16–18	10	100

Example: 681 series fitting selection

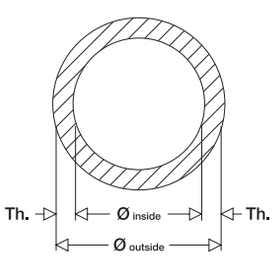

Known both the outside and inside diameters (**ex.: 17 mm** and **13 mm**);

or known the outside diameter (**ex.: Øo 17 mm**) and the thickness (**ex.: th. 2 mm**) and considering that:

Øoutside – 2 · th. = Øinside

17 – 2 · 2 = 13 mm

Look within the table for the code matching both diameters:

Code		Ø inside	Ø outside
681035	23 p.1,5	12,5–13	16–18



437

Mechanical fitting.
For soft annealed copper, hard copper and stainless steel pipes.
With O-Ring seal.

Maximum working pressure: 10 bar
Medium temperature range: -25–120 °C
Finish: chrome plated

Code	Connection	Pipe diameter		
437010	23 p. 1,5	Ø 10	1	100
437012	23 p. 1,5	Ø 12	1	100
437014	23 p. 1,5	Ø 14	1	100
437015	23 p. 1,5	Ø 15	1	100
437016	23 p. 1,5	Ø 16	1	100



447

Mechanical fitting, monobloc.
For soft annealed copper, hard copper and stainless steel pipes.
With O-Ring seal.

Maximum working pressure: 10 bar
Medium temperature range: -25–120 °C
Finish: chrome plated

Code	Connection	Pipe diameter		
447010	23 p. 1,5	Ø 10	2	100
447012	23 p. 1,5	Ø 12	2	100
447014	23 p. 1,5	Ø 14	2	100
447015	23 p. 1,5	Ø 15	2	100
447016	23 p. 1,5	Ø 16	2	100



438

Mechanical fitting.
For soft annealed copper and hard copper pipes.
With PTFE seal.

Medium temperature range: 5–80 °C
Finish: chrome plated

Code	Connection	Pipe diameter		
438010	23 p. 1,5	Ø 10	2	100
438012	23 p. 1,5	Ø 12	2	100
438014	23 p. 1,5	Ø 14	2	100
438015	23 p. 1,5	Ø 15	2	100
438016	23 p. 1,5	Ø 16	2	100
438018	23 p. 1,5	Ø 18 with pipe stiffener	2	100



439

Mechanical fitting, with gasket.
Do not use with 232 series valves..
For soft annealed copper and hard copper pipes.

Finish: chrome plated

Code	Connection	Pipe diameter		
439010	23 p. 1,5	Ø 10	1	100
439012	23 p. 1,5	Ø 12	1	100
439014	23 p. 1,5	Ø 14	1	100
439015	23 p. 1,5	Ø 15	1	100
439016	23 p. 1,5	Ø 16	1	100

Fittings - 3/4" threaded connections



679
DARCAL

Fitting for multilayer plastic pipes for continuous high temperature use.

Maximum working pressure: 10 bar
Medium temperature range: 0–95 °C
Finish: chrome plated

Code	Connection	Pipe diameter		
679264	3/4" F	Ø 20x2	10	100
679265	3/4" F	Ø 20x2,25	10	100
679266	3/4" F	Ø 20x2,5	10	100

For a correct use, adjust the multilayer pipe diameter before installation using the Caleffi calibrator 679 series.

Calibrator 679 series page 107



681
DARCAL

Self-adjustable diameter fitting for single and multilayer plastic pipes.
Working temperature range 5–80°C (PE-X); 5–75°C (Multi-layer marked 95°C).

Maximum working pressure: 10 bar
Finish: chrome plated

Code	Connection	Pipe diameter		
681502	3/4" F	Øint. 7,5–8, Øext. 12–14	10	100
681500	3/4" F	Øint. 9–9,5, Øext. 14–16	10	100
681501	3/4" F	Øint. 9,5–10, Øext. 12–14	10	100
681506	3/4" F	Øint. 9,5–10, Øext. 14–16	10	100
681515	3/4" F	Øint. 10,5–11, Øext. 14–16	10	100
681517	3/4" F	Øint. 10,5–11, Øext. 16–18	10	100
681524	3/4" F	Øint. 11,5–12, Øext. 14–16	10	100
681526	3/4" F	Øint. 11,5–12, Øext. 16–18	10	100
681535	3/4" F	Øint. 12,5–13, Øext. 16–18	10	100
681537	3/4" F	Øint. 12,5–13, Øext. 18–20	10	100
681546	3/4" F	Øint. 13,5–14, Øext. 18–20	10	100
681555	3/4" F	Øint. 14,5–15, Øext. 18–20	10	100
681556	3/4" F	Øint. 15–15,5, Øext. 18–20	10	100
681564	3/4" F	Øint. 15,5–16, Øext. 18–20	10	100



437

Mechanical fitting.
For soft annealed copper, hard copper and stainless steel pipes.
With O-Ring seal.

Maximum working pressure: 10 bar
Medium temperature range: -25–120 °C
Finish: chrome plated

Code	Connection	Pipe diameter		
437510	3/4" F	Ø 10	2	100
437512	3/4" F	Ø 12	2	100
437514	3/4" F	Ø 14	2	100
437515	3/4" F	Ø 15	2	100
437516	3/4" F	Ø 16	2	100
437518	3/4" F	Ø 18	2	10

For connection to the pipes of special valves for panel radiators.



438

Mechanical fitting.
For soft annealed copper and hard copper pipes. With PTFE seal.

Medium temperature range: 5–80 °C
Finish: chrome plated

Code	Connection	Pipe diameter		
438512	3/4" F	Ø 12	2	100
438514	3/4" F	Ø 14	2	100
438515	3/4" F	Ø 15	2	100
438516	3/4" F	Ø 16	2	100
438518	3/4" F	Ø 18	2	100

Accessories for fittings



679

Calibrator and handle to adjust multilayer pipes diameter before use with fittings 679 series.

Code	Notes		
679001	calibrator Ø14x2	1	-
679002	calibrator Ø16x2	1	-
679003	calibrator Ø16x2,25	1	-
679004	calibrator Ø18x2	1	-
679006	calibrator Ø20x2	1	-
679007	calibrator Ø20x2,25	1	-
679008	calibrator Ø20x2,5	1	-
679010	calibrator Ø26x3	1	-
679009	handle for calibrator	1	-

Multilayer pipe calibration and installation of fitting components 679 series

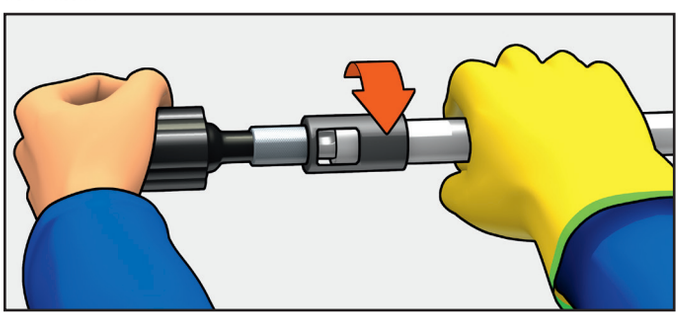

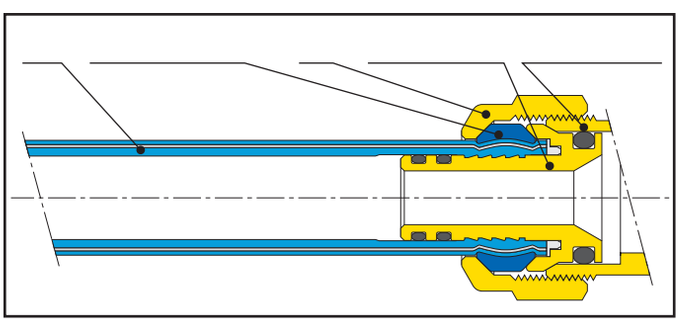

ACCESSORIES FOR RADIATORS

Accessories for radiators



Adapter for installing thermostatic and thermo-electric actuator with valves 338, 339, 401, 402, 425, 426, 421, 422, 4001, 4003, 4004, 3380, 4005, 455 and 456 series.

Code		
F36077	1	50



230

Kit for △p measuring in the circuits with dynamic valves.

Code		
230100	1	-



381

Telescopic union tailpiece with nut for radiator valves and lockshield valves.

Maximum working pressure: 10 bar
Medium temperature range: 5–100 °C
Telescopic union extension: 15 mm
Finish: chrome plated

Code	Connection 1	Connection 2		
381302	1/2″ F captive nut	3/8″ M	1	10
381402	3/4″ F captive nut	1/2″ M	1	10



382

Fitting with 23 p.1,5 captive nut.

Maximum working pressure: 10 bar
Medium temperature range: 5–100 °C
Finish: chrome plated

Code	Connection 1	Connection 2		
382000	23 p. 1,5 M	23 p.1,5 F captive nut	10	-



382

Reduced tailpiece.

Finish: chrome plated

Code	Connection 1	Connection 2		
382532	3/4″ F captive nut	3/8″ M	1	10



383

Female fitting - olive coupling.

Finish: chrome plated

Code	Connection 1	Connection 2		
383151	23 p.1,5 F	3/4″ M	10	-



383

Connection fitting with O-Ring seal.
For 679 and 681 series (3/4″ versions).

Finish: chrome plated

Code	Connection 1	Connection 2		
383551	23 p.1,5 F olive	3/4″ M	10	100



384

Male fitting - olive coupling.

Finish: chrome plated

Code	Connection 1	Connection 2		
384031	23 p. 1,5 M	3/8″ M	10	-
384041	23 p. 1,5 M	1/2″ M	10	-



3871

Wrench for 26 and 30 mm hexagonal nuts.
For fittings 437, 447, 679, 680, 681 23 P.1,5 and 3/4″ series.

Code	Notes		
387100	26 mm x 30 mm	1	4

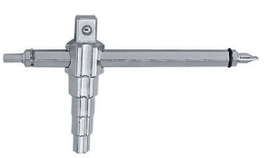

3871

Universal key.
Can be used for unions from 3/8″ to 1″

Code		
387127	1	10



4490

Knob for thermostatic radiator valves.
For valves 220, 221, 222, 223, 224, 225, 226, 227, 230, 231, 232, 233, 234 and 237 series.

Code		
449010	20	100

Drain cock for radiators



560

Drain cock for radiators and wall-mounted boilers.
The 10-piece pack includes an extractor code 560000.

Maximum working pressure: 10 bar
Medium temperature range: 5–100 °C
Finish: nickel plated

Code	Connection	Notes		
560421	1/2" M	drain cock	10	-
560000	-	extractor hose connection	25	-

SPARE PARTS FOR RADIATOR VALVES

Spare parts for radiator valves



3872

Replacement kit for radiator valves headwork.
Only for 3/8" and 1/2" valves.
Complete with 20 spare headworks (only for valves without pre-setting).
For valves 338, 339, 401, 402, 425,426, 421, 422, 230, 231,232, 233, 234, 237, 220,221, 222, 223, 224, 225, 226, 227, 456 and 4005 series.

Code		
387201	1	4

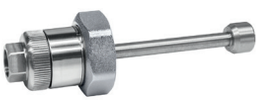

3872

Adapting kit for headwork tool code 387200 to new headwork tool code 387201.

Code		
387211	1	4

VALVES FOR PANEL RADIATORS

Valves for panel radiators - double fitting



3010

Valve for panel radiators with built-in thermostatic valve unit.
Straight version.
One-pipe.
With adjustable by-pass.
With non-return device.

Maximum working pressure: 10 bar
Medium temperature range: 5–100 °C

Code	Radiator connection	Pipe connection		
301043	1/2″ M	3/4″ M	1	25
301053	3/4″ F	3/4″ M	1	25



3011

Valve for panel radiators with built-in thermostatic valve unit.
Angled version.
One-pipe.
With adjustable by-pass.
With non-return device.

Maximum working pressure: 10 bar
Medium temperature range: 5–100 °C

Code	Radiator connection	Pipe connection		
301143	1/2″ M	3/4″ M	1	25
301153	3/4″ F	3/4″ M	1	25



3012

Valve for panel radiators with built-in thermostatic valve unit.
Floor connections.
Straight version.
One-pipe.
With adjustable by-pass.
With non-return device.

Maximum working pressure: 10 bar
Medium temperature range: 5–100 °C

Code	Radiator connection	Pipe connection		
301241	3/4″ M	1/2″ M	1	25
301250	3/4″ F	3/4″ F	1	25



3013

Valve for panel radiators with built-in thermostatic valve unit.
Wall connections.
Angled version.
One-pipe.
With adjustable by-pass.
With non-return device.

Maximum working pressure: 10 bar
Medium temperature range: 5–100 °C

Code	Radiator connection	Pipe connection		
301341	1/2″ M	1/2″ M	1	25
301350	3/4″ M	3/4″ F	1	25

Valves for panel radiators - single fitting



3015

Single valve for panel radiators with built-in thermostatic valve unit.
Wall connections.
Angled version.

Maximum working pressure: 10 bar
Medium temperature range: 5–100 °C

Code	Radiator connection	Pipe connection		
301540	3/4″ M	1/2″ M	1	50
301550	3/4″ M	3/4″ F	1	50

ZONE AND MOTORISED VALVES, DISTRIBUTION MANIFOLDS, BOXES AND ACCESSORIES

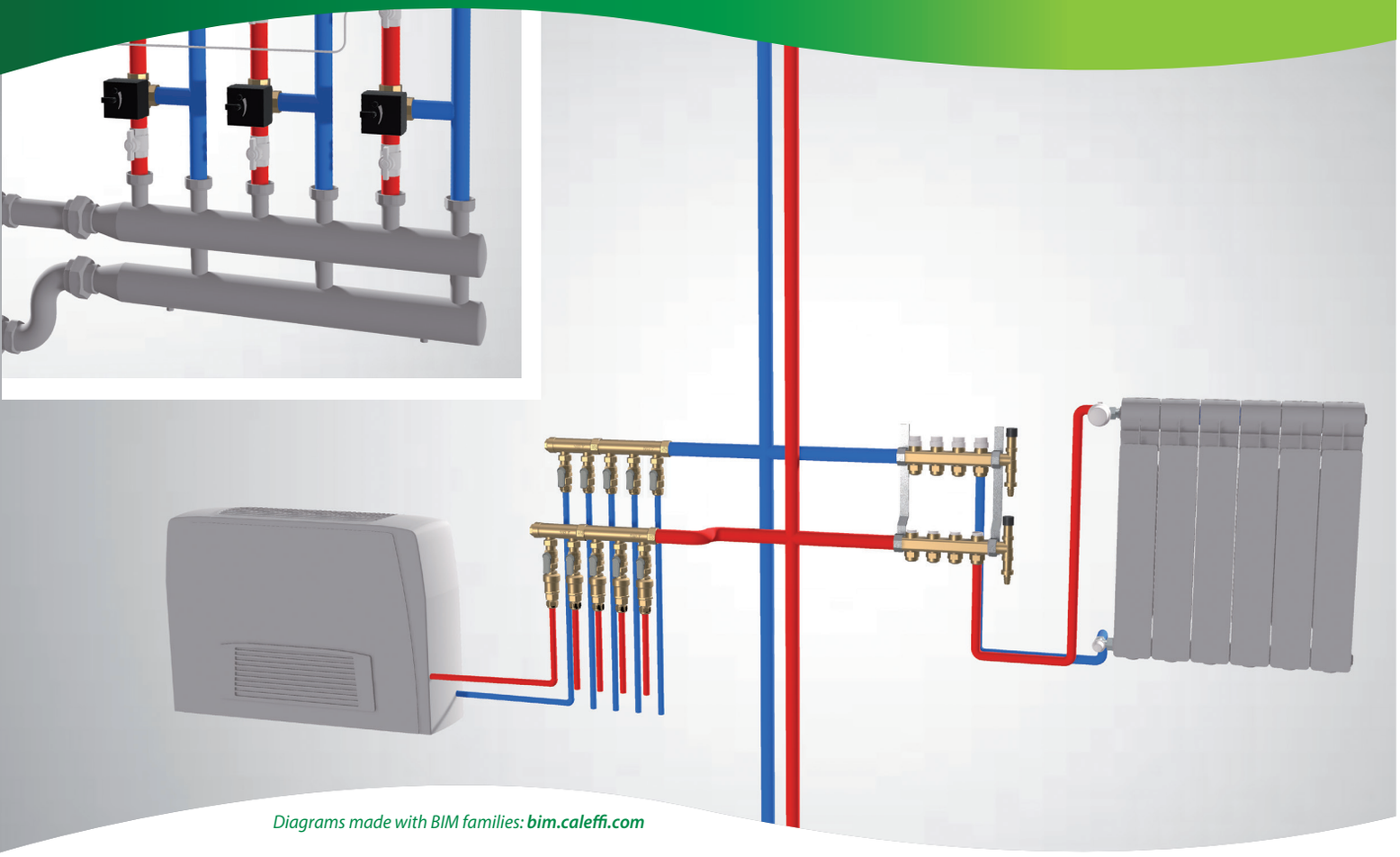

Diagrams made with BIM families: ***bim.caleffi.com***

Zone/diverter valves
Single distribution manifolds
Dual distribution manifolds
Distribution manifolds with shut-off and pre-regulating valves
Accessories
Fittings
Inspection wall boxes and wall ports

TWO-WAY AND THREE-WAY VALVES, DISTRIBUTION MANIFOLDS AND BOXES

The zone valves perform the function of automatically shutting off the flow rate of the vector medium distributed to the system.
In particular:
- in zone heating systems, they assist in ambient temperature regulation;
- in domestic hot water production and storage systems they regulate the temperature inside storage boilers;
- in residential and industrial systems they shut off the medium in the distribution networks.

Zone valves and motorised valves

- Motorised ball zone valves

- Thermo-electric zone piston valves

- Motorised zone valves with spring return

- Motorised ball valves

- Motorised ball valves for high flow rates

- Motorised valves for central heating systems

- Butterfly valves

Distribution manifolds and boxes

- Single manifolds

- Dual manifolds

- Manifolds with shut-off and pre-adjustment valves

- Thermo-electric actuators

- Fittings

- Plastic inspection wall boxes

- Sheet metal inspection wall boxes

ZONE VALVES AND MOTORISED VALVES

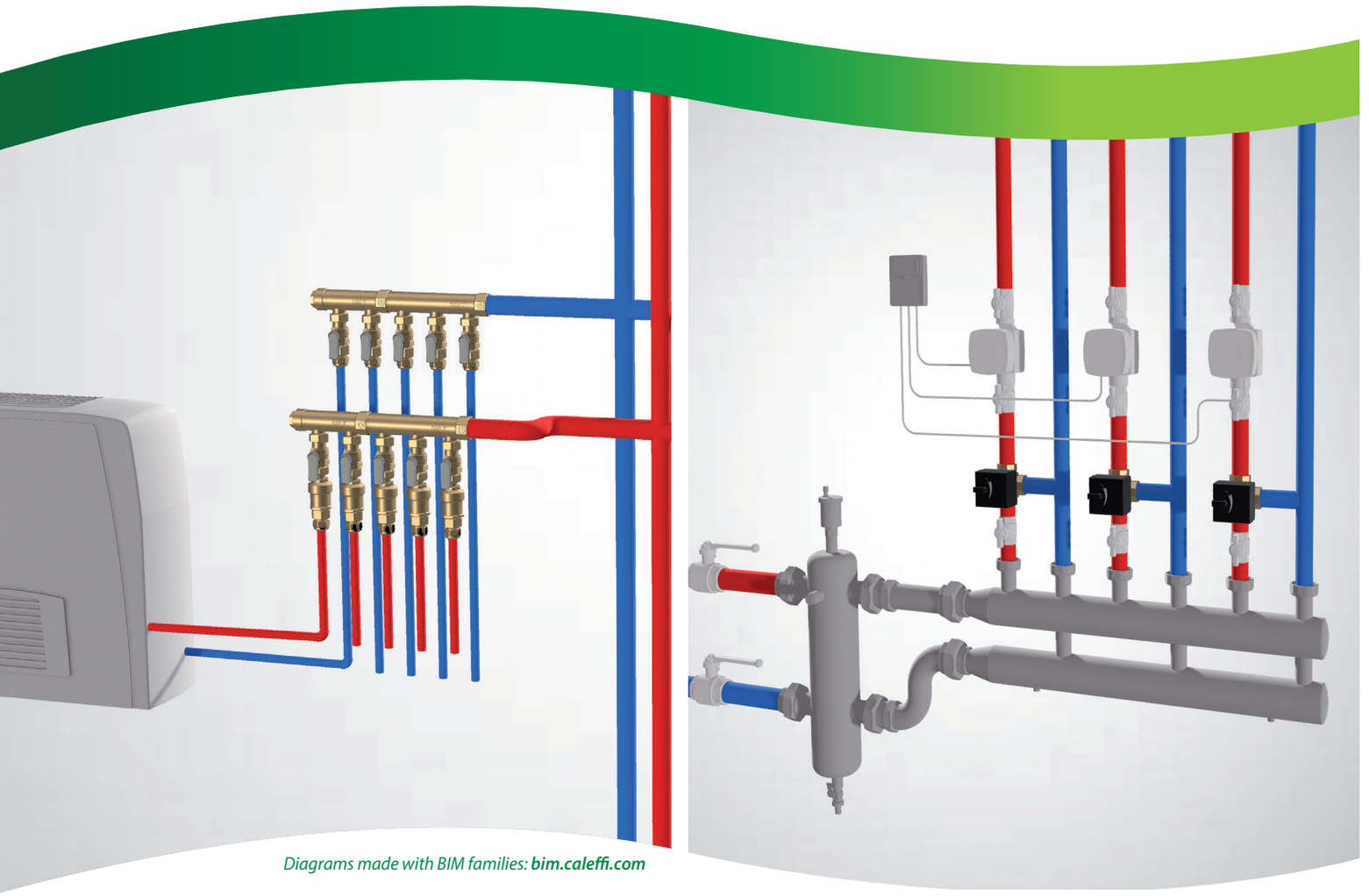

Diagrams made with BIM families: ***bim.caleffi.com***

Motorised two-way ball zone valves
Motorised three-way ball zone valves
Motorised three-way ball zone valves by-pass version
Motorised three-way ball zone valves with telescopic by-pass tee
Accessories and spare parts for motorised ball valve
Motorised ball zone valves with insulation
Motorised two-way ball valves for high flow rates
Motorised three-way ball valves for high flow rates - “T” drilling
Motorised three-way ball valves for high flow rates - “L” drilling
Thermo-electric piston zone valves
Thermo-electric actuator for piston zone valves
Piston zone valves thermo-electric
Motorised zone valves with spring return

TWO-WAY VALVES

	Actuator	Application	Type of valve				Type of actuator			Control signal		
			ball	piston	paddle	butterfly	thermo-electric	motorised	motorised with spring return	2 points	3 points	
642 					●				●	●		
676 	**656.** 			●			●			●		
6452 			●					●		● (R)		
6442 (40 sec) 			●					●			●	
6442 (10 sec) 			●					●			●	
6446 (10 sec) 			●					●		● (R)		
638 		(kit)	●					●			●	

Legend

For heating systems

For cooling systems

Suitable for cooling with the use of insulation

For domestic water systems (check legislation in individual countries)

(R) with internal relay

(kit) with optional insulation kit

THREE-WAY VALVES

	Actuator	Application	Type of valve			Type of actuator			Control signal	
			ball	piston	paddle	thermo-electric	motorised	motorised with spring return	2points	3points
643 					●			●	●	
677 	**656.** 			●		●			●	
678 	**656.** 			●		●			●	
633 	**630** 			●		●			●	
6453 			●				●		● (R)	
6443 (40 sec) 		(kit)	●				●			●
6443 (10 sec) 		(kit)	●				●			●
6443.. 3BY 			●				●			●
6444 			●				●			●
638 ("T" drilling) 		(kit)	●				●			●
638 ("L" drilling) 		(kit)	●				●			●

ZONE/DIVERTER VALVES

Motorised two-way ball zone valves

10 s - 3 point



6442

Motorised two-way ball valve.
Complete with **three-point control** actuator.
With auxiliary microswitch.

Maximum working pressure: 10 bar
Medium temperature range: -5–110 °C
Ambient temperature range: 0–55 °C
Protection class: IP 54
Supply cable length: 1 m
Auxiliary microswitch contact rating (230 V): 0,8 A
Opening-Closing time: 10 s (90° rot.)

Code	Connection	Electric supply	Kv (m^3/h)		
644246	1/2″ M	230 V AC	11,1	1	10
644256	3/4″ M	230 V AC	11,1	1	10
644248	1/2″ M	24 V AC	11,1	1	10
644258	3/4″ M	24 V AC	11,1	1	10

10 s - 2 point



6446

Motorised two-way ball valve.
Complete with **two-point control** actuator.
With auxiliary microswitch.

Maximum working pressure: 10 bar
Medium temperature range: -5–110 °C
Ambient temperature range: 0–55 °C
Protection class: IP 54
Supply cable length: 1 m
Auxiliary microswitch contact rating (230 V): 0,8 A
Opening-Closing time: 10 s (90° rot.)

Code	Connection	Electric supply	Kv (m^3/h)		
644646	1/2″ M	230 V AC	11,1	1	6
644656	3/4″ M	230 V AC	11,1	1	6

40 s - 3 point



6442

Motorised two-way ball zone valve.
Complete with **three-point control** actuator.
With auxiliary microswitch.

Maximum working pressure: 10 bar
Medium temperature range: -5–110 °C
Ambient temperature range: 0–55 °C
Protection class: IP 54
Supply cable length: 1 m
Auxiliary microswitch contact rating (230 V): 0,8 A
Opening-Closing time: 40 s (90° rot.)

Code	Connection	Electric supply	Kv (m^3/h)		
644242	1/2″ M	230 V AC	11,1	1	10
644252	3/4″ M	230 V AC	11,1	1	10
644262	1″ M	230 V AC	11,1	1	10
644244	1/2″ M	24 V AC	11,1	1	10
644254	3/4″ M	24 V AC	11,1	1	10
644264	1″ M	24 V AC	11,1	1	10

Motorised three-way ball zone valves

10 s - 3 point



6443

Motorised three-way ball diverter valve.
Complete with **three-point control** actuator.
With auxiliary microswitch.

Maximum working pressure: 10 bar
Medium temperature range: -5–110 °C
Ambient temperature range: 0–55 °C
Protection class: IP 54
Supply cable length: 1 m
Auxiliary microswitch contact rating (230 V): 0,8 A
Opening-Closing time: 10 s (90° rot.)

Code	Connection	Electric supply	Kv (m^3/h)		
644346	1/2″ M	230 V AC	3,9	1	5
644356	3/4″ M	230 V AC	3,9	1	5
644357	3/4″ M	230 V AC	8,6	1	5
644366	1″ M	230 V AC	9,0	1	5
644348	1/2″ M	24 V AC	3,9	1	5
644358	3/4″ M	24 V AC	3,9	1	5
644359	3/4″ M	24 V AC	8,6	1	5
644368	1″ M	24 V AC	9,0	1	5

10 s - 2 point



6447

Motorised three-way diverter valve.
Complete with **two-point control** actuator.
With auxiliary microswitch.

Maximum working pressure: 10 bar
Medium temperature range: -5–110 °C
Ambient temperature range: 0–55 °C
△p max.: 10 bar
Protection class: IP 54
Supply cable length: 1 m
Auxiliary microswitch contact rating (230 V): 0,8 A
Opening-Closing time: 10 s (90° rot.)

Code	Connection	Electric supply	Kv (m^3/h)		
644766	1″ M	230 V AC	9,0	1	6
644746	1/2″ M	230 V AC	3,9	1	6
644756	3/4″ M	230 V AC	3,9	1	6

40 s - 3 point



6443

Motorised three-way diverter valve.
Complete with **three-point control** actuator.
With auxiliary microswitch.

Maximum working pressure: 10 bar
Medium temperature range: -5–110 °C
Ambient temperature range: 0–55 °C
Protection class: IP 54
Supply cable length: 1 m
Auxiliary microswitch contact rating (230 V): 0,8 A
Opening-Closing time: 40 s (90° rot.)

Code	Connection	Electric supply	Kv (m^3/h)		
644342	1/2″ M	230 V AC	3,9	1	5
644352	3/4″ M	230 V AC	3,9	1	5
644353	3/4″ M	230 V AC	8,6	1	5
644362	1″ M	230 V AC	9,0	1	5
644344	1/2″ M	24 V AC	3,9	1	5
644354	3/4″ M	24 V AC	3,9	1	5
644355	3/4″ M	24 V AC	8,6	1	5
644364	1″ M	24 V AC	9,0	1	5

Motorised three-way ball zone valves by-pass version



6443...3BY

Motorised three-way ball zone valve, by-pass version.
Complete with **three-point control** actuator.
With auxiliary microswitch.

Maximum working pressure: 10 bar
Medium temperature range: -5–110 °C
Ambient temperature range: 0–55 °C
Protection class: IP 54
Supply cable length: 1 m
Auxiliary microswitch contact rating (230 V): 0,8 A
Opening-Closing time: 40 s (90° rot.)

Code	Connection	Electric supply	Kv straight (m^3/h)	Kv by-pass (m^3/h)		
644342 3BY	1/2″ M	230 V AC	10,3	1,8	1	5
644352 3BY	3/4″ M	230 V AC	10,3	1,8	1	5
644362 3BY	1″ M	230 V AC	10,3	1,8	1	5
644344 3BY	1/2″ M	24 V AC	10,3	1,8	1	5
644354 3BY	3/4″ M	24 V AC	10,3	1,8	1	5
644364 3BY	1″ M	24 V AC	10,3	1,8	1	5

Motorised three-way ball zone valves with telescopic by-pass tee



6444

Motorised three-way ball zone valve with telescopic by-pass tee.
Complete with **three-point control** actuator.
Tee complete with U6 nozzle.
Centre distance between connections adjustable from 49 to 63 mm.
With auxiliary microswitch.

Maximum working pressure: 10 bar
Medium temperature range: -5–110 °C
Ambient temperature range: 0–55 °C
Protection class: IP 54
Supply cable length: 1 m
Auxiliary microswitch contact rating (230 V): 0,8 A
Opening-Closing time: 40 s (90° rot.)

Code	Connection	Electric supply	Kv straight (m^3/h)	Kv by-pass (m^3/h)		
644442	1/2″ M	230 V AC	10,3	1,2	1	5
644452	3/4″ M	230 V AC	10,3	1,2	1	5
644462	1″ M	230 V AC	10,3	1,2	1	5
644444	1/2″ M	24 V AC	10,3	1,2	1	5
644454	3/4″ M	24 V AC	10,3	1,2	1	5
644464	1″ M	24 V AC	10,3	1,2	1	5

Accessories and spare parts for motorised ball valve



6440

Two-point control spare actuator for motorised ball zone valves 6446, 6447 series.

Ambient temperature range: 0–55 °C
Protection class: IP 54
Supply cable length: 1 m

Code	Electric supply	Opening-Closing time		
644052	230 V AC	10 s (90° rot.)	1	10



6440

Spare **three-point control** actuator for motorised ball zone valves 6445 series.

Ambient temperature range: 0–55 °C
Protection class: IP 54
Supply cable length: 1 m

Code	Electric supply	Opening-Closing time		
644022	230 V AC	40 s (90° rot.)	1	10
644032	230 V AC	10 s (90° rot.)	1	10



6440

Spare **three-point control** actuator for motorised ball zone valve 6443 series.

Ambient temperature range: 0–55 °C
Protection class: IP 54
Supply cable length: 1 m

Code	Electric supply	Opening-Closing time		
644024	24 V AC	40 s (90° rot.)	1	10
644034	24 V AC	10 s (90° rot.)	1	10



Tailpiece, nut and O-Ring.
For motorized zone valves 6470, 6480, 6489, 6490, 6452, 6453, 6459, 6442, 6443 and 6444 series.

Code	nut connection	tailpiece connection		
R69276	1″F	1/2″M	1	-
R69277	1″F	3/4″M	1	-
R69280	1 1/4″F	1″M	1	-
R59466	1 1/4″M	1 1/4″F	1	-



6443

Insulation kit for use in heating and air-conditioning systems.
For 644 series three-way motorised valves.

Code	Article use		
CBN644357	644353, 644357, 644362, 644366, 644355, 644359, 644364, 644368	1	-

Wiring diagram for three-point control actuator

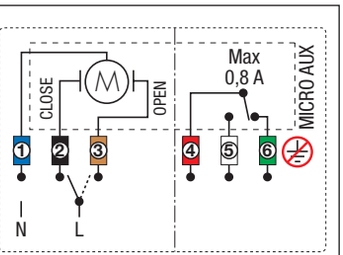

Wiring diagram for two-point control actuator

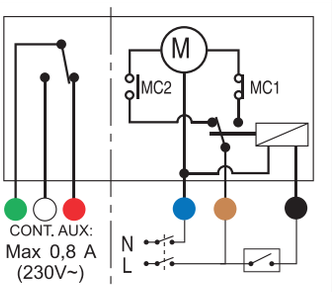

Motorised ball zone valves with insulation



6452

Two-way motorised ball zone valve for heating and cooling systems.
Complete with **two-point control** actuator.
With manual opening lever.
With insulation.
With auxiliary microswitch.

Maximum working pressure: 10 bar
Medium temperature range: -10–110 °C
Ambient temperature range: -10–55 °C
Protection class: IP 65
Supply cable length: 0,8 m
Auxiliary microswitch contact rating (230 V): 6 (2) A

Code	Connection	Electric supply	Kv (m^3/h)		
645242	1/2″ M	230 V AC	17,00	1	-
645252	3/4″ M	230 V AC	17,27	1	-
645262	1″ M	230 V AC	36,58	1	-
645272	1 1/4″ M	230 V AC	39,50	1	-
645244	1/2″ M	24 V AC	17,00	1	-
645254	3/4″ M	24 V AC	17,27	1	-
645264	1″ M	24 V AC	36,58	1	-
645274	1 1/4″ M	24 V AC	39,50	1	-



6453

Three-way motorised ball zone valve, for heating and cooling systems.
Complete with **two-point control** actuator.
With manual opening knob
With insulation.
With auxiliary microswitch.

Maximum working pressure: 10 bar
Medium temperature range: -10–110 °C
Ambient temperature range: -10–55 °C
Supply cable length: 0,8 m
Auxiliary microswitch contact rating (230 V): 6 (2) A

Code	Connection	Electric supply	Kv straight (m^3/h)	Kv by-pass (m^3/h)		
645342	1/2″ M	230 V AC	14,10	2,45	1	-
645352	3/4″ M	230 V AC	14,43	2,50	1	-
645362	1″ M	230 V AC	33,52	3,60	1	-
645372	1 1/4″ M	230 V AC	36,00	3,80	1	-
645344	1/2″ M	24 V AC	14,10	2,45	1	-
645354	3/4″ M	24 V AC	14,43	2,50	1	-
645364	1″ M	24 V AC	33,52	3,60	1	-
645374	1 1/4″ M	24 V AC	36,00	3,80	1	-



6459

By-pass tee.
For 6453 series motorised ball zone valves.
With insulation.

Maximum working pressure: 10 bar
Medium temperature range: -10–110 °C

Code	Connection	Kv by-pass valve + tee (m^3/h)		
645940	1/2″ M without nozzle	2,20	1	-
645950	3/4″ M without nozzle	2,25	1	-
645960	1″ M without nozzle	3,25	1	-
645970	1 1/4″ M without nozzle	3,40	1	-



6450

Spare **two-point control** actuator for motorised ball zone valves 6452 and 6453 series.

Protection class: IP 65
Supply cable length: 0,8 m
Ambient temperature range: -10–55 °C

Code	Electric supply	Opening-Closing time		
645002	230 V AC	50 s (90° rot.)	1	-
645004	24 V AC	50 s (90° rot.)	1	-



6459

Shell insulation for motorised ball zone valves 6453 series with by-pass tee 6459 and 6490 series.
Usable with 356.IS series manifolds.

Code	Notes		
645901	1/2″ - 3/4″	1	-
645900	1″ - 1 1/4″	1	-

Wiring diagram for 6452 and 6453 series valves, two-point actuator with internal relais, valve in closed position

- R relay
- MC1 opening end microswitch.
- MC2 closing end microswitch.
- MICRO AUX free auxiliary microswitch.

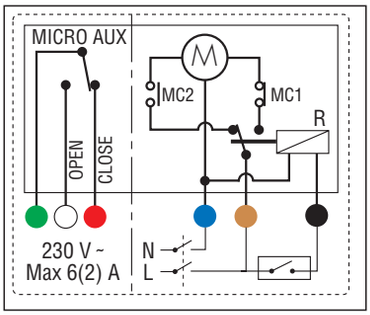

Motorised two-way ball valves for high flow rates

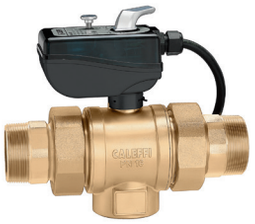

638

Motorised two-way ball valve.
Complete with **three-point control** actuator.
Actuator torque 15 N·m.
With auxiliary microswitch.

Maximum working pressure: 16 bar
Medium temperature range: -10–110 °C
Ambient temperature range: -10–55 °C
△p max.: 10 bar
Protection class: IP 65
Auxiliary microswitch contact rating (230 V): 6 (2) A
Opening-Closing time: 50 s
(90° rot.)

Code	Connection	Electric supply	Kv (m^3/h)		
638052	3/4" M	230 V AC	17	1	-
638062	1" M	230 V AC	36,5	1	-
638072	1 1/4" M	230 V AC	48	1	-
638082	1 1/2" M	230 V AC	77	1	-
638092	2" M	230 V AC	140	1	-
638054	3/4" M	24 V AC	17	1	-
638064	1" M	24 V AC	36,5	1	-
638074	1 1/4" M	24 V AC	48	1	-
638084	1 1/2" M	24 V AC	77	1	-
638094	2" M	24 V AC	140	1	-



638

Spare **three-point control** actuators for motorised two and three-way valves, "T" drilling version 638 series.

Ambient temperature range: -10–55 °C
Protection class: IP 54
Supply cable length: 1 m

Code	Electric supply	Electric supply	Opening-Closing time		
638012	230 V AC	230 V AC	50 s (90° rot.)	1	-
638014	24 V AC	24 V AC	50 s (90° rot.)	1	-



638

Insulation kit for use in heating and cooling systems.
For 638 series two-way motorised valves.

Code	Notes		
CBN638052	3/4"	1	-
CBN638062	1"	1	-
CBN638072	1 1/4"	1	-
CBN638082	1 1/2"-2"	1	-



638

Insulation kit for use in heating and cooling systems.
For 638 series three-way motorised valves.

Code	Notes		
CBN638053	3/4" - drilling "L"	1	-
CBN638063	1" - drilling "L"	1	-
CBN638073	1 1/4" - drilling "L"	1	-
CBN638083	1 1/2" - 2"- drilling "L"	1	-
CBN638153	3/4" - drilling "T"	1	-
CBN638163	1" - drilling "T"	1	-
CBN638173	1 1/4" - drilling "T"	1	-
CBN638183	1 1/2" - 2" - drilling "T"	1	-

Wiring diagram for two-way and three-way ball valves 638 series with three-point control actuator
Internal diagram with valve in the following position:
- Closed, for two-way valve.
- Port **A** closed for three-way valves.

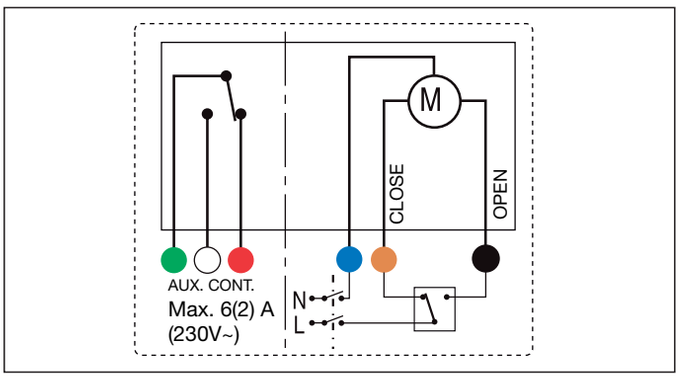

Motorised three-way ball valves for high flow rates - "T" drilling



638

Motorised three-way ball valve, 90° rotation - "T" drilling.
Reduced bore. With **three-point control** actuator.
Actuator torque 15 N·m.
With auxiliary microswitch.

Maximum working pressure: 16 bar
Medium temperature range: -10–110 °C
Ambient temperature range: -10–55 °C
Protection class: IP 65
Auxiliary microswitch contact rating (230 V): 6 (2) A
Opening-Closing time: 50 s (90° rot.)
△p max.: 10 bar

Code	Connection	Electric supply	Kv (m^3/h)		
638153	3/4" M	230 V AC	9,5	1	-
638163	1" M	230 V AC	12,9	1	-
638173	1 1/4" M	230 V AC	24,7	1	-
638183	1 1/2" M	230 V AC	47	1	-
638193	2" M	230 V AC	50	1	-
638155	3/4" M	24 V AC	9,5	1	-
638165	1" M	24 V AC	12,9	1	-
638175	1 1/4" M	24 V AC	24,7	1	-
638185	1 1/2" M	24 V AC	47	1	-
638195	2" M	24 V AC	50	1	-

Motorised three-way ball valves for high flow rates - "L" drilling



638

Motorised three-way ball valve, 180° rotation - "L" drilling.
Reduced bore. With **three-point control** actuator.
Actuator torque 15 N·m.
With auxiliary microswitch.

Maximum working pressure: 16 bar
Medium temperature range: -10–110 °C
Ambient temperature range: -10–55 °C
Protection class: IP 65
Auxiliary microswitch contact rating (230 V): 6 (2) A
Opening-Closing time: 100 s (90° rotation)
△p max.: 10 bar

Code	Connection	Electric supply	Kv (m^3/h)		
638053	3/4" M	230 V AC	9,9	1	-
638063	1" M	230 V AC	13,4	1	-
638073	1 1/4" M	230 V AC	22,8	1	-
638083	1 1/2" M	230 V AC	44	1	-
638093	2" M	230 V AC	50	1	-
638055	3/4" M	24 V AC	9,9	1	-
638065	1" M	24 V AC	13,4	1	-
638075	1 1/4" M	24 V AC	22,8	1	-
638085	1 1/2" M	24 V AC	44	1	-
638095	2" M	24 V AC	50	1	-



638

Spare **three-point control** actuators for motorised two and three-way valves, "T" drilling version 638 series.

Ambient temperature range: -10–55 °C
Protection class: IP 54
Supply cable length: 1 m

Code	Electric supply	Opening-Closing time		
638012	230 V AC	50 s (90° rot.)	1	-
638014	24 V AC	50 s (90° rot.)	1	-



638

Spare **three-point control** actuator for three-way motorised ball valves, "L" drilling version, 638 series.

Ambient temperature range: -10–55 °C
Protection class: IP 54
Supply cable length: 1 m

Code	Electric supply	Opening-Closing time		
638412	230 V AC	100 s (180° rot.) (rotazione 180°)	1	-
638414	24 V AC	100 s (180° rot.) (rotazione 180°)	1	-

Applications "T" drilling

Diverter	Mixing
1 inlet - 2 outlets	**2 inlets - 1 outlet**
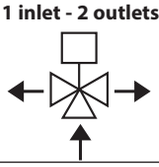	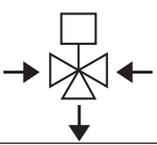

Applications "L" drilling

Diverter	Diverter
1 inlet - 2 outlets	**2 inlets - 1 outlet**
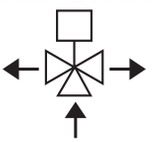	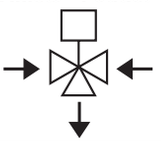

Thermo-electric piston zone valves



676

Two-way zone valve for **high flow rates**.
For installation of series 6563, 6561, 6562 and 6564 thermo-electric actuators.

Maximum working pressure: 10 bar
Medium temperature range: 0–95 °C
△p max.: 2,5 bar

Code	Connection	Kv (m^3/h)		
676500	1″ M	4,77	1	20



676

Two-way zone valve.
Designed for installation of series 6563, 6561, 6562 and 6564 thermo-electric actuators.

Maximum working pressure: 10 bar
Medium temperature range: 0–95 °C
△p max.: 1,2 bar

Code	Connection	Kv (m^3/h)		
676040	1/2″ M	3,7	1	10
676050	3/4″ M	3,7	1	10
676060	1″ M	3,7	1	10



677

Three-way zone valve.
Designed for installation of series 6563, 6561, 6562 and 6564 thermo-electric actuators.

Maximum working pressure: 10 bar
Medium temperature range: 0–95 °C
△p max.: 1,2 bar

Code	Connection	Kv straight (m^3/h)	Kv by-pass (m^3/h)		
677040	1/2″ M	3,7	1,0	1	10
677050	3/4″ M	3,7	1,0	1	10
677060	1″ M	3,7	1,0	1	10



678

Three-way zone valve with by-pass tee.
Designed for installation of series 6563, 6561, 6562 and 6564 thermo-electric actuators.
Adjustable outlet centre distance from 49 to 63 mm.
Tee complete with U6 nozzle.

Maximum working pressure: 10 bar
Medium temperature range: 0–95 °C
△p max.: 1,2 bar

Code	Connection	Kv straight (m^3/h)	Kv by-pass (m^3/h)		
678040	1/2″ M	3,7	1,0	1	10
678050	3/4″ M	3,7	1,0	1	10
678060	1″ M	3,7	1,0	1	10

Thermo-electric actuator for piston zone valves



6561

Thermo-electric actuator with auxiliary microswitch.
Normally closed.
For valves 338, 339, 401, 402, 425, 426, 421, 422, 455, 456, 220, 221, 222, 223, 224, 225, 226, 227, 230, 231, 232, 233, 234, 237, 676, 677, 678 series, manifolds 670, 671, 662, 663, 668.S1, 664, 665, 116 series and unit 171, 182 series.
With auxiliary microswitch.

Ambient temperature range: 0–50 °C
Protection class: IP 44 (vertical position)
Supply cable length: 0,8 m
Auxiliary microswitch contact rating (230 V): 0,8 A
Starting current: ≤ 1 A

CE

Code	Electric supply		
656112	230 V AC	1	10
656114	24 V AC/DC	1	10



6561

Thermo-electric actuator.
Normally closed.
For valves 116, 338, 339, 401, 402, 425, 426, 421, 422, 455, 456, 220, 221, 222, 223, 224, 225, 226, 227, 230, 231, 232, 233, 234, 237, 676, 677, 678 series, manifolds 670, 671, 662, 663, 668.S1, 664, 665 series and unit 171, 182 series.

Ambient temperature range: 0–50 °C
Protection class: IP 44 (vertical position)
Supply cable length: 0,8 m
Starting current: ≤ 1 A

CE

Code	Electric supply		
656102	230 V AC	1	10
656104	24 V AC/DC	1	10

For other actuator models, see page 162

Piston zone valves thermo-electric



632

Two-way piston zone valve.

Maximum working pressure: 10 bar
Medium temperature range: -5–95 °C
△p max.: 1 bar

Code	Connection	Kv straight (m^3/h)		
632400	1/2″ M	5,10	1	5
632500	3/4″ M	6,27	1	5
632600	1″ M	6,38	1	5



633

Three-way piston zone valve.
3/4″ female third way.

Maximum working pressure: 10 bar
Medium temperature range: -5–95 °C
△p max.: 1 bar

Code	Connection	Kv straight (m^3/h)	Kv by-pass (m^3/h)		
633400	1/2″ M	4,99	4,33	1	5
633500	3/4″ M	6,19	4,91	1	5
633600	1″ M	6,45	5,30	1	5



635

Balanced by-pass tee.
For zone valves 633 series.

Maximum working pressure: 10 bar
Medium temperature range: -5–95 °C
△p max.: 1 bar

Code	Connection	Notes	Kv by-pass valve + tee (m^3/h)		
635440	1/2″ M	nozzle: U4	0,96	1	5
635460	1/2″ M	nozzle: U6	1,32	1	5
635480	1/2″ M	nozzle: U8	1,73	1	5
635540	3/4″ M	nozzle: U4	0,98	1	5
635560	3/4″ M	nozzle: U6	1,36	1	5
635580	3/4″ M	nozzle: U8	1,79	1	5
635640	1″ M	nozzle: U4	1,02	1	5
635660	1″ M	nozzle: U6	1,43	1	5
635680	1″ M	nozzle: U8	1,88	1	5

Wiring diagram for piston zone valves 632 and 633 series with thermo-electric actuator

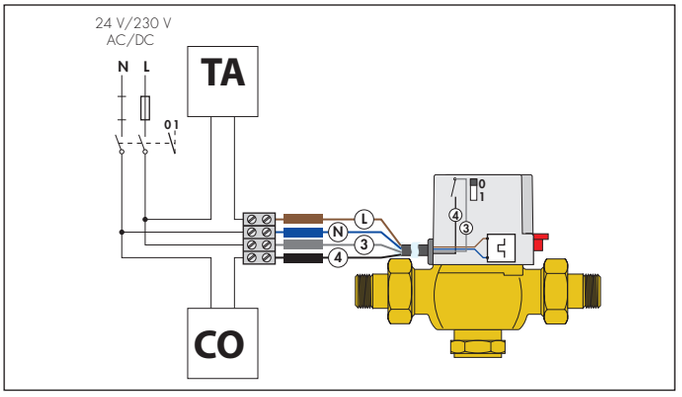



630

Thermo-electric actuator.
For zone valves 632 and 633 series.
Normally closed.

Protection class: IP 42
Ambient temperature range: 0–55 °C

CE

Code	Electric supply	Running power consumption (W)	Starting current (A)		
630002	230 V AC/DC	5	≤ 1	1	10



630

Thermo-electric actuator with manual actuator.
For zone valves 632 and 633 series.
Normally closed.
With auxiliary microswitch.

Protection class: IP 20
Auxiliary microswitch contact rating (230 V): 6 (3) A
Ambient temperature range: 0–55 °C

CE

Code	Electric supply	Starting current		
630112	230 V AC/DC	≤ 1 A	1	10
630114	24 V AC/DC	≤ 350 mA	1	10



Tailpiece, nut and seal.
For zone valves 632, 633 and 635 series

Code	nut connection		
R69096	1″ F	1	-
R69093	1″ F	1	-
R69237	1 1/4″ F	1	-

Motorised zone valves with spring return



642
Z-one®

Motorised two-way zone valve.
Normally closed.
With auxiliary microswitch.

Maximum working pressure: 16 bar
Medium temperature range: 0–90 °C
Ambient temperature range: 0–40 °C
Protection class: IP 20
Auxiliary microswitch contact rating (230 V): 0,8 A
Supply cable length: 0,95 m
Opening-Closing time: 70–75 s (opening time), 5–7 s (closing time)

CE

Code	Connection	Electric supply	Kv (m^3/h)	△p max. (bar)		
642042	1/2"F	230 V AC	2,5	2,10	1	10
642052	3/4"F	230 V AC	4,5	1,50	1	10
642062	1"F	230 V AC	6	1,0	1	10
642064	1"F	24 V AC	6	1,0	1	10



643
Z-one®

Motorised three-way zone valve.
Normally closed.
With auxiliary microswitch.

Maximum working pressure: 16 bar
Medium temperature range: 0–90 °C
Ambient temperature range: 0–40 °C
Protection class: IP 20
Auxiliary microswitch contact rating (230 V): 0,8 A
Supply cable length: 0,95 m
Opening-Closing time: 70–75 s (opening time), 5–7 s (closing time)

CE

Code	Connection	Electric supply	Kv (m^3/h)	△p max. (bar)		
643042	1/2"F	230 V AC	2,5	2,10	1	10
643052	3/4"F	230 V AC	4,5	1,50	1	10
643062	1"F	230 V AC	6	1,0	1	10



641

Spare actuator for motorised zone valves 642 and 643 series.

Protection class: IP 65
Running power consumption: 7 VA
Opening-Closing time: 5–7 s (closing time), 70–75 s (opening time)

Auxiliary microswitch contact rating (230 V): 0,8 A

CE

Code	Electric supply		
641002	230 V AC	1	-

Installation

The 3-way valve cannot be converted into 2-way valve and viceversa.

2-way valve installed on the flow

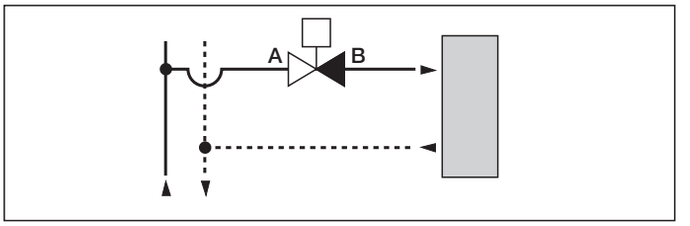

2-way valve installed on the return

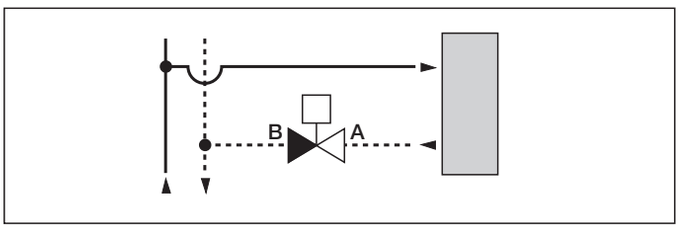

3-way valve installed on the flow with diverting position and ON/OFF use mode

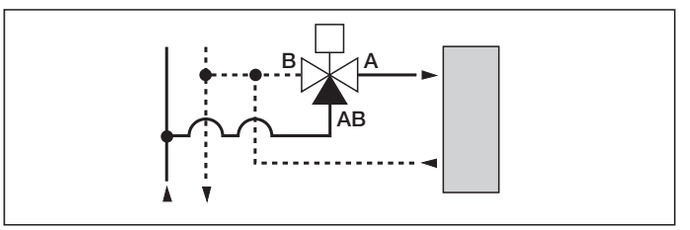

3-way valve installed on the return with mixing position and ON/OFF use mode

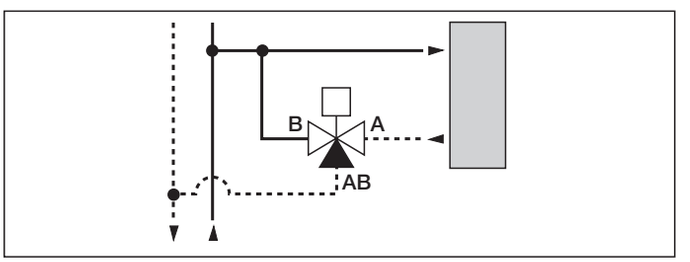

Wiring diagram for spring return valves 642 and 643 series

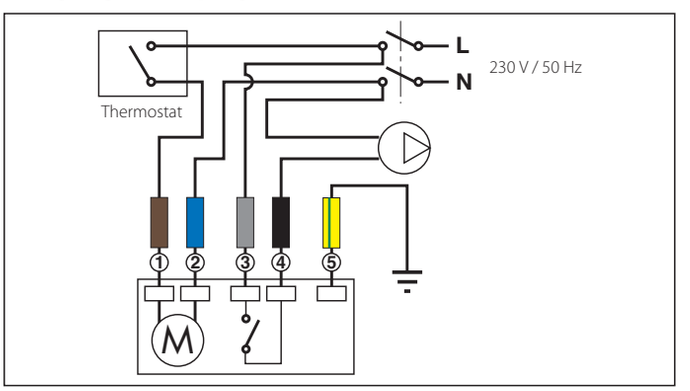

DISTRIBUTION MANIFOLDS AND BOXES

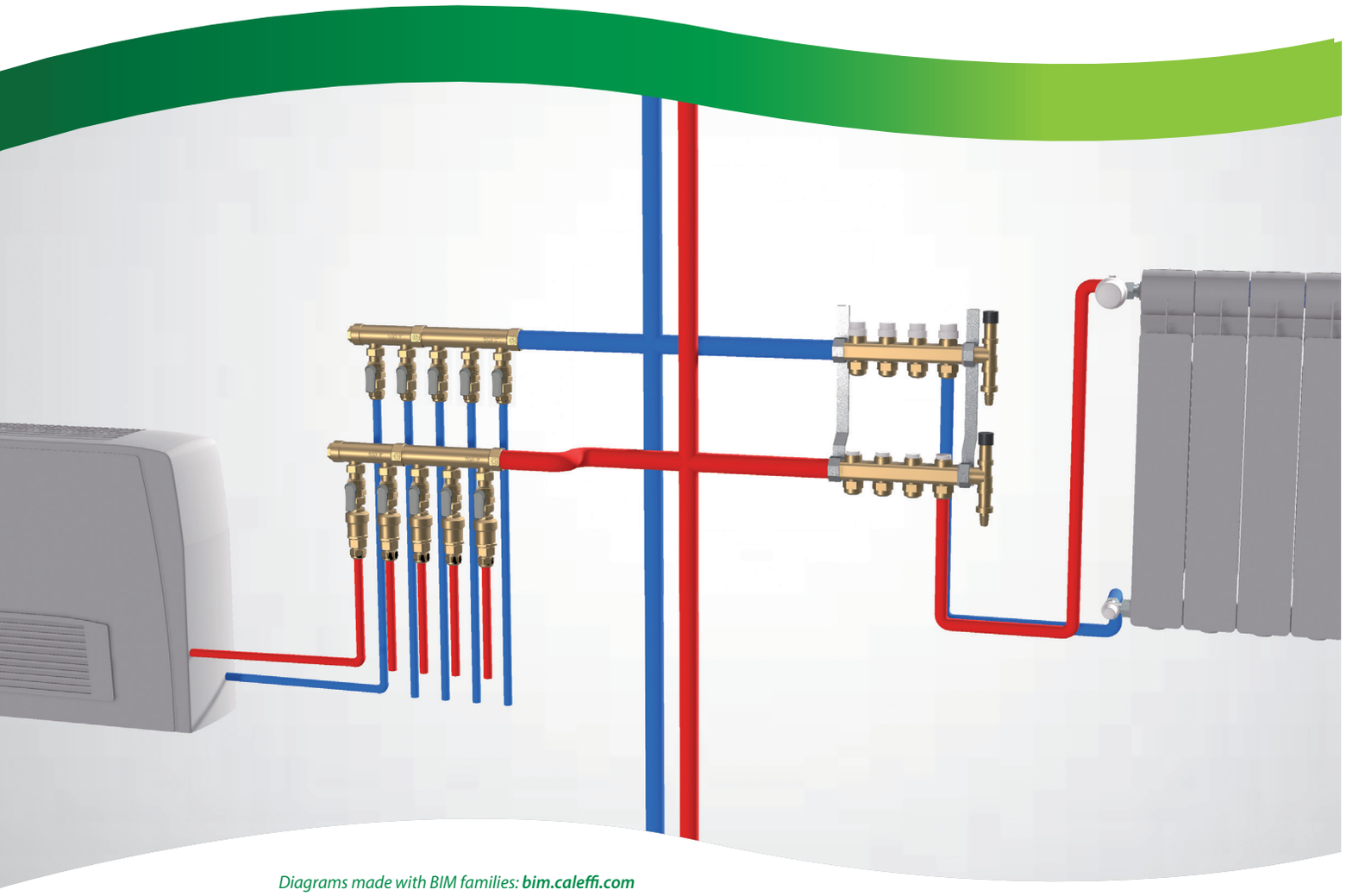

Diagrams made with BIM families: ***bim.caleffi.com***

Single distribution manifolds - male outlet
Single distribution manifolds - female outlet
Blind single distribution manifolds
Single distribution manifolds with shut-off valves
Single distribution manifolds for air conditioning systems
Dual distribution manifolds
Accessories for dual distribution manifolds
Pre-assembled distribution manifolds with shut-off and pre-regulating valves - 1" connections
Single distribution manifolds with shut-off and pre-regulating valves - 1" connections
Accessories for manifolds - 1" connections
Pre-assembled distribution manifolds with shut-off and pre-regulating valves - 1 1/4" connections
Single distribution manifolds with shut-off and pre-regulating valves - 1 1/4" connections
Accessories for manifolds - 1 1/4" connections
Thermo-electric actuator (threaded connection)
Thermo-electric actuator (push fit connection)
Accessories
Fittings - threaded connections 23 p. 1.5
Fittings - 3/4" and 1" threaded connections
Plastic inspection wall box
Sheet steel inspection wall boxes
Brackets for inspection wall boxes

SINGLE DISTRIBUTION MANIFOLDS

Single distribution manifolds - male outlet



349

Modular single distribution manifold. **Male outlet connection**, centre distance: 35 mm.
For heating and cooling systems.

Maximum working pressure: 10 bar
Medium temperature range: -10–110 °C

Code	Connection 1	Connection 2	Outlet connection	Outlet centre distance (mm)		
349020	3/4″ F	3/4″ M	23 p. 1,5 M - 2 out.	35	5	50
349030	3/4″ F	3/4″ M	23 p. 1,5 M - 3 out.	35	5	50
349040	3/4″ F	3/4″ M	23 p. 1,5 M - 4 out.	35	5	50
349050	3/4″ F	3/4″ M	23 p. 1,5 M - 5 out.	35	5	50



350

Modular single distribution manifold. **Male outlet connection**.
For heating and cooling systems.
Coupling with PTFE seal.

Note(*): without PTFE seal on coupling.

Maximum working pressure: 10 bar
Medium temperature range: -10–110 °C

Code	Connection 1	Connection 2	Outlet connection	Notes	Outlet centre distance (mm)		
350520	3/4″ F	3/4″ M	23 p. 1,5 M - 2 out.	-	50	2	-
350530	3/4″ F	3/4″ M	23 p. 1,5 M - 3 out.	-	50	2	-
350540	3/4″ F	3/4″ M	23 p. 1,5 M - 4 out.	-	50	2	-
350620	1″ F	1″ M	23 p. 1,5 M - 2 out.	-	50	2	-
350630	1″ F	1″ M	23 p. 1,5 M - 3 out.	-	50	2	-
350640	1″ F	1″ M	23 p. 1,5 M - 4 out.	-	50	2	-
350720	1 1/4″ F	1 1/4″ M	23 p. 1,5 M - 2 out.	(*)	60	2	-
350730	1 1/4″ F	1 1/4″ M	23 p. 1,5 M - 3 out.	(*)	60	2	-
350740	1 1/4″ F	1 1/4″ M	23 p. 1,5 M - 4 out.	(*)	60	2	-



349

Modular single distribution manifold. **Male outlet connections**, centre distance: 35 mm.
Outlet male connections.

Maximum working pressure: 10 bar
Medium temperature range: -10–110 °C

Code	Connection 1	Connection 2	Outlet connection	Outlet centre distance (mm)		
349130	3/4″ F	3/4″ M	1/2″ M - 3 out.	35	5	50
349140	3/4″ F	3/4″ M	1/2″ M - 4 out.	35	5	50
349150	3/4″ F	3/4″ M	1/2″ M - 5 out.	35	5	50



349

Modular single distribution manifold, **for press-fittings**. **Male outlet connections** with flat seat, centre distance: 35 mm.

Maximum working pressure: 10 bar
Medium temperature range: 10–110 °C

Code	Connection 1	Connection 2	Outlet connection	Outlet centre distance (mm)		
349230	3/4″ F	3/4″ M	1/2″ M, Ø 13 - 3 out.	35	5	50
349240	3/4″ F	3/4″ M	1/2″ M, Ø 13 - 4 out.	35	5	50
349250	3/4″ F	3/4″ M	1/2″ M, Ø 13 - 5 out.	35	5	50



592

Modular single distribution manifold.
Male outlet connections.
PTFE seal on coupling.
Note (*): without PTFE seal on coupling.

Maximum working pressure: 10 bar
Medium temperature range: -10–110 °C

Code	Connection 1	Connection 2	Outlet connection	Outlet centre distance (mm)	Notes		
592525	3/4″ F	3/4″ M	1/2″ M - 2 out.	50		2	-
592535	3/4″ F	3/4″ M	1/2″ M - 3 out.	50		2	-
592545	3/4″ F	3/4″ M	1/2″ M - 4 out.	50		2	-
592625	1″ F	1″ M	1/2″ M - 2 out.	50		2	-
592635	1″ F	1″ M	1/2″ M - 3 out.	50		2	-
592645	1″ F	1″ M	1/2″ M - 4 out.	50		2	-
592626	1″ F	1″ M	1/2″ M - 2 out.	60		2	-
592636	1″ F	1″ M	1/2″ M - 3 out.	60		2	-
592646	1″ F	1″ M	1/2″ M - 4 out.	60		2	-
592726	1 1/4″ F	1 1/4″ M	1/2″ M - 2 out.	60	(*)	2	-
592736	1 1/4″ F	1 1/4″ M	1/2″ M - 3 out.	60	(*)	2	-
592746	1 1/4″ F	1 1/4″ M	1/2″ M - 4 out.	60	(*)	2	-
592622	1″ F	1″ M	3/4″ M - 2 out.	60		2	-
592632	1″ F	1″ M	3/4″ M - 3 out.	60		2	-

Single distribution manifolds - female outlet



349

Modular single distribution manifold. **Female outlet connections,** centre distance: 35 mm.

Maximum working pressure: 10 bar
Medium temperature range: -10–110 °C

Code	Connection 1	Connection 2	Outlet connection	Outlet centre distance (mm)		
349330	3/4″F	3/4″M	1/2″F - 3 out.	35	5	50
349340	3/4″F	3/4″M	1/2″F - 4 out.	35	5	50
349350	3/4″F	3/4″M	1/2″F - 5 out.	35	5	50



592

Modular single distribution manifold. **Female outlet connections**, centre distance 50 mm.
PTFE seal on coupling.
Note (*): without PTFE seal on coupling.

Maximum working pressure: 10 bar
Medium temperature range: -10–110 °C

Code	Connection 1	Connection 2	Outlet connection	Outlet centre distance (mm)	Notes		
592527	3/4″F	3/4″M	1/2″F - 2 out.	50		2	-
592537	3/4″F	3/4″M	1/2″F - 3 out.	50		2	-
592547	3/4″F	3/4″M	1/2″F - 4 out.	50		2	-
592627	1″F	1″M	1/2″F - 2 out.	50		2	-
592637	1″F	1″M	1/2″F - 3 out.	50		2	-
592647	1″F	1″M	1/2″F - 4 out.	50		2	-
592628	1″F	1″M	1/2″F - 2 out.	60		2	-
592638	1″F	1″M	1/2″F - 3 out.	60		2	-
592648	1″F	1″M	1/2″F - 4 out.	60		2	-
592728	1 1/4″F	1 1/4″M	1/2″F - 2 out.	60	(*)	2	-
592738	1 1/4″F	1 1/4″M	1/2″F - 3 out.	60	(*)	2	-
592748	1 1/4″F	1 1/4″M	1/2″F - 4 out.	60	(*)	2	-

Blind single distribution manifolds



351

Blind single distribution manifold. **Male outlet connections**.
Manifold for heating and cooling systems.

Maximum working pressure: 10 bar
Medium temperature range: -10–110 °C

Code	Connection 1	Outlet connection	Outlet centre distance (mm)		
351520	3/4″F	23 p. 1,5 M - 2 out.	50	2	-
351530	3/4″F	23 p. 1,5 M - 3 out.	50	2	-
351540	3/4″F	23 p. 1,5 M - 4 out.	50	2	-
351620	1″F	23 p. 1,5 M - 2 out.	50	2	-
351630	1″F	23 p. 1,5 M - 3 out.	50	2	-
351640	1″F	23 p. 1,5 M - 4 out.	50	2	-



598

Blind single distribution manifold. **Female outlet connections**, centre distance 50 mm.
For heating and cooling systems.

Maximum working pressure: 10 bar
Medium temperature range: -10–110 °C

Code	Connection 1	Outlet connection	Outlet centre distance (mm)		
598522	3/4″F	1/2″F - 2 out.	50	2	-
598532	3/4″F	1/2″F - 3 out.	50	2	-
598542	3/4″F	1/2″F - 4 out.	50	2	-
598622	1″F	1/2″F - 2 out.	50	2	-
598632	1″F	1/2″F - 3 out.	50	2	-
598642	1″F	1/2″F - 4 out.	50	2	-

Single distribution manifolds with shut-off valves



354

Modular single distribution manifold with shut-off valves.

Maximum working pressure: 10 bar
Medium temperature range: 5–100 °C
Outlet centre distance: 35 mm
Material: dezincification resistant brass DR

Code	Connection 1	Connection 2	Outlet connection		
354052	3/4″F	3/4″M	23 p. 1,5 M - 2 out.	5	20
354053	3/4″F	3/4″M	23 p. 1,5 M - 3 out.	5	20
354054	3/4″F	3/4″M	23 p. 1,5 M - 4 out.	5	20
354055	3/4″F	3/4″M	23 p. 1,5 M - 5 out.	5	20



354

Modular single distribution manifold with shut-off valves. **Female flat seat connection**.
For press-fittings.

Maximum working pressure: 10 bar
Medium temperature range: 5–100 °C
Outlet centre distance: 35 mm
Material: brass

Code	Connection 1	Connection 2	Outlet connection		
354252	3/4″F	3/4″M	1/2″M, Ø 13 - 2 out.	2	30
354253	3/4″F	3/4″M	1/2″M, Ø 13 - 3 out.	2	20
354254	3/4″F	3/4″M	1/2″M, Ø 13 - 4 out.	2	10
354255	3/4″F	3/4″M	1/2″M, Ø 13 - 5 out.	2	10

Single distribution manifolds for air conditioning systems

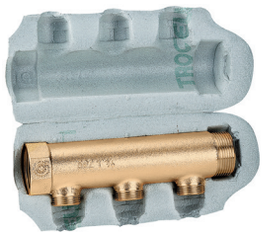

650

Modular single distribution manifold.
Euroconus male outlet connections.
For heating and cooling systems.
With insulation.

Maximum working pressure: 10 bar
Medium temperature range: -40–95 °C

Code	Connection 1	Connection 2	Outlet connection	Outlet centre distance (mm)		
650622	1″F	1″M	3/4″M - 2 out.	60	2	-
650632	1″F	1″M	3/4″M - 3 out.	60	2	-
650722	1 1/4″F	1 1/4″M	3/4″M - 2 out.	60	2	-
650732	1 1/4″F	1 1/4″M	3/4″M - 3 out.	60	2	-
650742	1 1/4″F	1 1/4″M	3/4″M - 4 out.	60	2	-
650822	1 1/2″F	1 1/2″M	3/4″M - 2 out.	80	2	
650832	1 1/2″F	1 1/2″M	3/4″M - 3 out.	80	2	

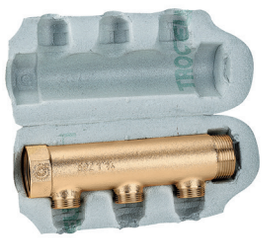

650 NEW

Modular single distribution manifold. **Flat seat male outlet connections.**
For heating and cooling systems.
With insulation.

Maximum working pressure: 10 bar
Medium temperature range: -40–95 °C

Code	Connection 1	Connection 2	Outlet connection	Outlet centre distance (mm)		
650723	1 1/4″F	1 1/4″M	3/4″M - 2 out.	60	2	
650733	1 1/4″F	1 1/4″M	3/4″M - 3 out.	60	2	
650743	1 1/4″F	1 1/4″M	3/4″M - 4 out.	60	2	
650823	1 1/2″F	1 1/2″M	3/4″M - 2 out.	80	2	
650833	1 1/2″F	1 1/2″M	3/4″M - 3 out.	80	2	

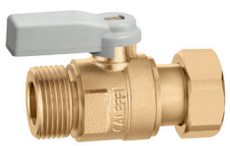

650 NEW

Ball shut-off valve.

Maximum working pressure: 10 bar
Medium temperature range: 5–90 °C
Maximum percentage of glycol: 30 %
Material: brass
Medium: glycol solutions, water

Code	Connection 1	Connection 2	Kv (m^3/h)		
650001	3/4″M	3/4″F captive nut	14	1	20



127 NEW AUTOFLOW

Compact automatic flow rate regulator, in line, with high resistance tecnopolymer cartridge.
Flow rates: 0,12–1,2 m3/h.
Accuracy: ± 10%.
Δp range: 15–200 kPa
PATENT

Code	Notes
127451***	0,12; 0,2; 0,3; 0,4; 0,5; 0,6; 0,7; 0,8; 0,9; 1,0; 1,2

Only for use with 650 series manifolds with male outlets **with a flat seat**.

*** For the code ending, please refer to the coding method on page 234

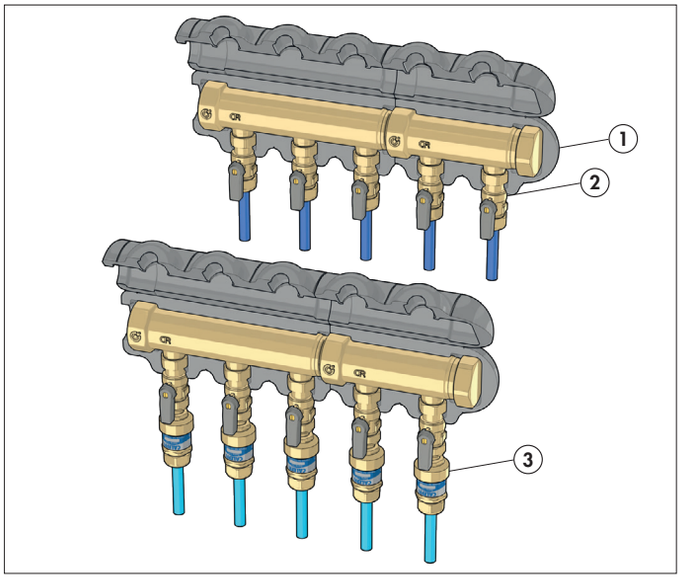

1. 650 series manifold with with male outlets with a flat seat, for heating and cooling systems. Made using dezincification resistant alloy to prevent corrosion in cooling systems, this allows the distribution of high flow rates while keeping pressure drops low. The outlet centre distance of up to 80 mm offers easy installation of fittings for pipes up to 26 mm. Complete with pre-formed shell insulation to prevent condensation build-up on the metal surface.

2. 650001 ball shut-off valve, to add the option of shutting off the outlets of 650 series manifolds with male outlets with a flat seat. The built-in captive nut helps to save space, thereby making installation more convenient.

3. AUTOFLOW® automatic flow rate regulator to ensure the correct flow rate to each terminal and proper hydraulic balancing of the system, while avoiding interference and minimising energy wastage.

DUAL DISTRIBUTION MANIFOLDS

Dual distribution manifolds

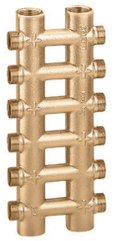

356

Cast monoblock dual distribution manifold.
For heating and cooling systems.

Maximum working pressure: 10 bar
Medium temperature range: -10–110 °C
Main centre distance: 60 mm
Outlet centre distance: 40 mm

Code	Connection	Outlet connection		
356502	3/4″F	23 p. 1,5 M - 2 out.	1	
356504	3/4″F	23 p. 1,5 M - 4 out.	1	5
356506	3/4″F	23 p. 1,5 M - 6 out.	1	5
356508	3/4″F	23 p. 1,5 M - 8 out.	1	5
356510	3/4″F	23 p. 1,5 M - 10 out.	1	5
356604	1″F	23 p. 1,5 M - 4 out.	1	5
356606	1″F	23 p. 1,5 M - 6 out.	1	5
356608	1″F	23 p. 1,5 M - 8 out.	1	5
356610	1″F	23 p. 1,5 M - 10 out.	1	5
356612	1″F	23 p. 1,5 M - 12 out.	1	-



356

Cast monoblock dual distribution manifold.
For heating and cooling systems.
With insulation.

Maximum working pressure: 10 bar
Medium temperature range: 0–100 °C
Main centre distance: 60 mm
Outlet centre distance: 40 mm

Code	Connection	Outlet connection		
356604 IS	1″F	23 p. 1,5 M - 4 out.	1	10
356606 IS	1″F	23 p. 1,5 M - 6 out.	1	10
356608 IS	1″F	23 p. 1,5 M - 8 out.	1	5
356610 IS	1″F	23 p. 1,5 M - 10 out.	1	5



357

Single sided cast monoblock dual distribution manifold.
Manifold for heating and cooling systems.

Maximum working pressure: 10 bar
Medium temperature range: -10–110 °C
Main centre distance: 60 mm
Outlet centre distance: 40 mm

Code	Connection	Outlet connection		
357502	3/4″F	23 p. 1,5 M - 2 out.	1	10
357503	3/4″F	23 p. 1,5 M - 3 out.	1	10
357504	3/4″F	23 p. 1,5 M - 4 out.	1	5
357505	3/4″F	23 p. 1,5 M - 5 out.	1	-
357506	3/4″F	23 p. 1,5 M - 6 out.	1	-

Accessories for dual distribution manifolds



356

Differential by-pass for dual distribution manifolds 356 and 357 series.
3/8″ connection for automatic air vent.

Maximum working pressure: 10 bar
Medium temperature range: -10–110 °C
Differential pressure fixed setting: 20 (2000 mm c.a.) kPa

Code	Connection		
356050	3/4″M	1	20



3640

End fitting.
For distribution manifolds 356 and 357 series.

Code	Connection 1	Connection 2		
364050	3/4″M	23 p. 1,5 M	2	-
364060	1″M	23 p. 1,5 M	2	-



3641

Plug.
For distribution manifolds 356 and 357 series.

Code	Connection		
364150	3/4″M	2	-
364160	1″M	2	-



3642

End fitting for air vent connection.
For distribution manifolds 356 and 357 series.

Code	Connection 1	Connection 2		
364253	3/4″M	3/8″F	2	-
364254	3/4″M	1/2″F	2	-
364263	1″M	3/8″F	2	-

DISTRIBUTION MANIFOLDS WITH SHUT-OFF AND PRE-REGULATING VALVES

Pre-assembled distribution manifolds with shut-off and pre-regulating valves - 1" connections

662

Distribution manifold group.
Complete with:
- return manifold complete with shut-off valves fitted for thermo-electric actuator;
- flow manifold complete with lockshield valves for flow rate pre-regulation;
- end fittings consisting of double radial end fitting, manual air vent and plugs;
- steel mounting brackets for use with box 659, 661 series or for direct wall fixing.

Maximum working pressure: 10 bar
Medium temperature range: 5–100 °C
Outlet centre distance: 50 mm

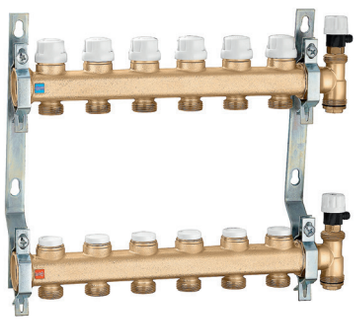

Code	Connection	Outlet connection		
6626B5	1" F	3/4" M - 2 out.	1	-
6626C5	1" F	3/4" M - 3 out.	1	-
6626D5	1" F	3/4" M - 4 out.	1	-
6626E5	1" F	3/4" M - 5 out.	1	-
6626F5	1" F	3/4" M - 6 out.	1	-
6626G5	1" F	3/4" M - 7 out.	1	-
6626H5	1" F	3/4" M - 8 out.	1	-
6626I5	1" F	3/4" M - 9 out.	1	-
6626L5	1" F	3/4" M - 10 out.	1	-
6626M5	1" F	3/4" M - 11 out.	1	-
6626N5	1" F	3/4" M - 12 out.	1	-
6626O5	1" F	3/4" M - 13 out.	1	-

For thermoelectric actuators, see page 162



664

Insulation for distribution manifolds 662, 664 and 665 series.
For heating and cooling systems.
For use with box code 659..4 (adjustable depth from 110 to 140 mm).

Code	Notes		
CBN6646F1	for manifolds with 2 to 6 outlets	35	-
CBN6646N1	for manifolds with 7 to 12 outlets	20	-
CBN6646O1	for manifolds with 13 outlets	1	-

Single distribution manifolds with shut-off and pre-regulating valves - 1" connections



662

Pair of distribution manifolds.
Complete with shut-off and lockshield valves for flow rate pre-regulation.

Maximum working pressure: 10 bar
Medium temperature range: 5–100 °C
Outlet centre distance: 50 mm

Code	Connection 1	Connection 2	Outlet connection		
662625	1"F	1"M	3/4"M - 2 out.	1	10
662635	1"F	1"M	3/4"M - 3 out.	1	10
662645	1"F	1"M	3/4"M - 4 out.	1	5
662655	1"F	1"M	3/4"M - 5 out.	1	5
662665	1"F	1"M	3/4"M - 6 out.	1	5



6621

Flow distribution manifold.
Complete with lockshield valves for flow rate pre-regulation.

Maximum working pressure: 10 bar
Medium temperature range: 5–100 °C
Outlet centre distance: 50 mm

Code	Connection 1	Connection 2	Outlet connection		
662125	1"F	1"M	3/4"M - 2 out.	2	-
662135	1"F	1"M	3/4"M - 3 out.	2	-
662145	1"F	1"M	3/4"M - 4 out.	2	-
662155	1"F	1"M	3/4"M - 5 out.	2	-
662165	1"F	1"M	3/4"M - 6 out.	2	-



6620

Return manifold.
Complete with shut-off valves, fitted for thermo-electric actuator.

Maximum working pressure: 10 bar
Medium temperature range: 5–100 °C
Outlet centre distance: 50 mm

Code	Connection 1	Connection 2	Outlet connection		
662025	1"F	1"M	3/4"M - 2 out.	2	-
662035	1"F	1"M	3/4"M - 3 out.	2	-
662045	1"F	1"M	3/4"M - 4 out.	2	-
662055	1"F	1"M	3/4"M - 5 out.	2	-
662065	1"F	1"M	3/4"M - 6 out.	2	-

Accessories for manifolds - 1" connections

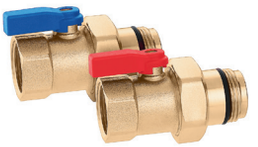

391

Pair of ball shut-off valves with O-Ring seal.
For distribution manifolds 664 and 665 series.

Maximum working pressure: 10 bar
Medium temperature range: 5–100 °C

Code	Pipe connection	Manifold connection		
391066	1"F	1"M	1	10



5996

End fitting consisting of double radial end fitting, air vent cock and plug.

Maximum working pressure: 10 bar
Medium temperature range: 5–100 °C

Code	Manifold connection		
599662	1"F	1	25



662

Fixed setting differential by-pass kit 20 kPa (2000 mm w.g.), with flexible hose.
For distribution manifolds 662 series.

Maximum working pressure: 10 bar
Medium temperature range: 0–100 °C

Code	Connection 1	Connection 2		
662000	3/4"F captive nut	3/4"F	1	5



658

Pair of steel mounting brackets for distribution manifolds 662 and 664 series.
To be used with boxes code 659..5 or directly wall mounted.

Code		
658101	1	20



658

Polymer mounting brackets with adjustable centre distance, for distribution manifolds 662 and 664 series.
To be used with boxes code 659.4 (depth 110–140 mm), or directly wall mounted.
Complete with screws and wall anchors.

Code		
658400	1	5

Pre-assembled distribution manifolds with shut-off and pre-regulating valves - 1 1/4" connections

663

Pre-assembled distribution manifold.
Consisting of:
- 1 return distribution manifold complete with shut-off valves fitted for thermo-electric actuator;
- 1 flow distribution manifold complete with lockshield valves for flow rate pre-regulation;
- 2 mounting brackets code 658100;
- 2 reduction fittings 1 1/4" M x 1" F code 364276;
- 2 double radial end fittings with plugs.

Maximum working pressure: 10 bar
Medium temperature range: 5–100 °C
Outlet centre distance: 50 mm

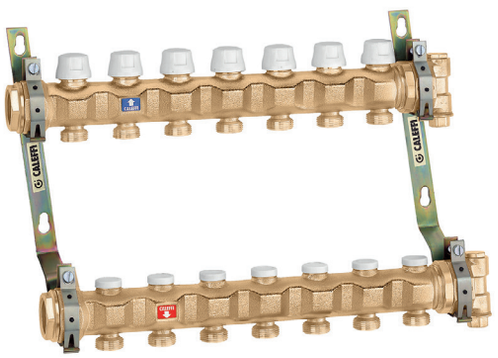

Code	Connection	Outlet connection		
6637C5	1 1/4" F	3/4" M - 3 out.	1	-
6637D5	1 1/4" F	3/4" M - 4 out.	1	-
6637E5	1 1/4" F	3/4" M - 5 out.	1	-
6637F5	1 1/4" F	3/4" M - 6 out.	1	-
6637G5	1 1/4" F	3/4" M - 7 out.	1	-
6637H5	1 1/4" F	3/4" M - 8 out.	1	-
6637I5	1 1/4" F	3/4" M - 9 out.	1	-
6637L5	1 1/4" F	3/4" M - 10 out.	1	-
6637M5	1 1/4" F	3/4" M - 11 out.	1	-
6637N5	1 1/4" F	3/4" M - 12 out.	1	-
6637O5	1 1/4" F	3/4" M - 13 out.	1	-

For thermoelectric actuators, see page 162

663

Pre-assembled distribution manifold complete with insulation, for cooling systems.
Complete with:
- 1 return distribution manifold complete with shut-off valves fitted for thermo-electric actuator;
- 1 flow distribution manifold complete with lockshield valve for flow rate pre-regulation;
- 2 mounting brackets code 658100;
- 2 reduction fittings 1 1/4" M x 1" F code 364276;
- 2 double radial end fittings with plugs.

With insulation.

Maximum working pressure: 10 bar
Medium temperature range: 5–100 °C
Outlet centre distance: 50 mm

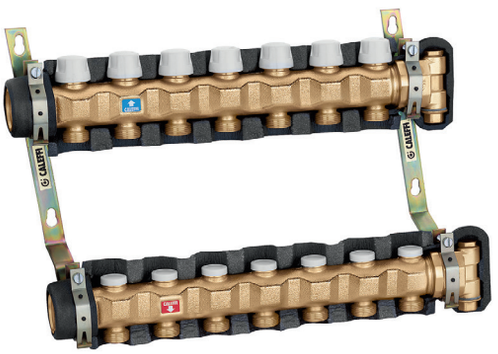

Code	Connection	Outlet connection		
6637C5 IS	1 1/4" F	3/4" M - 3 out.	1	-
6637D5 IS	1 1/4" F	3/4" M - 4 out.	1	-
6637E5 IS	1 1/4" F	3/4" M - 5 out.	1	-
6637F5 IS	1 1/4" F	3/4" M - 6 out.	1	-
6637G5 IS	1 1/4" F	3/4" M - 7 out.	1	-
6637H5 IS	1 1/4" F	3/4" M - 8 out.	1	-
6637I5 IS	1 1/4" F	3/4" M - 9 out.	1	-
6637L5 IS	1 1/4" F	3/4" M - 10 out.	1	-
6637M5 IS	1 1/4" F	3/4" M - 11 out.	1	-
6637N5 IS	1 1/4" F	3/4" M - 12 out.	1	-
6637O5 IS	1 1/4" F	3/4" M - 13 out.	1	-

Single distribution manifolds with shut-off and pre-regulating valves - 1 1/4" connections



663

Pair of distribution manifolds.
Complete with shut-off and lockshield valves for flow rate pre-regulation.

Maximum working pressure: 10 bar
Medium temperature range: 5–100 °C
Outlet centre distance: 50 mm

Code	Connection 1	Connection 2	Outlet connection		
663735	1 1/4" F	1 1/4" M	3/4" M - 3 out.	1	-
663745	1 1/4" F	1 1/4" M	3/4" M - 4 out.	1	-
663755	1 1/4" F	1 1/4" M	3/4" M - 5 out.	1	-
663765	1 1/4" F	1 1/4" M	3/4" M - 6 out.	1	-
663775	1 1/4" F	1 1/4" M	3/4" M - 7 out.	1	-
663785	1 1/4" F	1 1/4" M	3/4" M - 8 out.	1	-



6631

Flow distribution manifold.
Complete with lockshield valve for flow rate pre-regulation.

Maximum working pressure: 10 bar
Medium temperature range: 5–100 °C
Outlet centre distance: 50 mm

Code	Connection 1	Connection 2	Outlet connection		
663130	1 1/4" F	1 1/4" M	3/4" M - 3 out.	2	-
663140	1 1/4" F	1 1/4" M	3/4" M - 4 out.	2	-
663150	1 1/4" F	1 1/4" M	3/4" M - 5 out.	2	-
663160	1 1/4" F	1 1/4" M	3/4" M - 6 out.	2	-
663170	1 1/4" F	1 1/4" M	3/4" M - 7 out.	2	-
663180	1 1/4" F	1 1/4" M	3/4" M - 8 out.	2	-



6630

Return distribution manifold.
Complete with shut-off valves, fitted for thermo-electric actuator.

Maximum working pressure: 10 bar
Medium temperature range: 5–100 °C
Outlet centre distance: 50 mm

Code	Connection 1	Connection 2	Outlet connection		
663030	1 1/4" F	1 1/4" M	3/4" M - 3 out.	2	-
663040	1 1/4" F	1 1/4" M	3/4" M - 4 out.	2	-
663050	1 1/4" F	1 1/4" M	3/4" M - 5 out.	2	-
663060	1 1/4" F	1 1/4" M	3/4" M - 6 out.	2	-
663070	1 1/4" F	1 1/4" M	3/4" M - 7 out.	2	-
663080	1 1/4" F	1 1/4" M	3/4" M - 8 out.	2	-

Accessories for manifolds - 1 1/4" connections



663

Off-centre by-pass kit with fixed setting 20 kPa (2000 mm w.g.).
For pre-assembled distribution manifolds 663 series.

Maximum working pressure: 10 bar
Medium temperature range: -10–110 °C

Code	Connection 1	Connection 2		
663000	1/2" M	3/8" M	1	20



663

Insulation (front and back) for couple manifolds 663 series.

Code	Notes	Article use		
F69466	for manifolds with 3 outlets	6637C5, 6637C5 IS	1	-
F69467	for manifolds with 4 outlets	6637D5, 6637D5 IS	1	-
F69468	for manifolds with 5 outlets	6637E5, 6637E5 IS	1	-
F69469	for manifolds with 6 outlets	6637F5, 6637F5 IS	1	-
F69470	for manifolds with 7 outlets	6637G5, 6637G5 IS	1	-
F69471	for manifolds with 8 outlets	6637H5, 6637H5 IS	1	-
F69472	for manifolds with 9 outlets	6637I5, 6637I5 IS	1	-
F69473	for manifolds with 10 outlets	6637L5, 6637L5 IS	1	-
F69474	for manifolds with 11 outlets	6637M5, 6637M5 IS	1	-
F69475	for manifolds with 12 outlets	6637N5, 6637N5 IS	1	-
F69476	for manifolds with 13 outlets	6637O5, 6637O5 IS	1	-



391

Pair of ball valves.
Female-male connections with union.
With temperature gauge, scale: 0–80 °C, Ø 40 mm.

Maximum working pressure: 10 bar
Medium temperature range: 0–100 °C

Code	Connection 1	Connection 2		
391167	1" F	1 1/4" M	1	5
391177	1 1/4" F	1 1/4" M	1	5



391

Pair of ball valves.
Female-male connections with union.
With temperature gauge connection.

Maximum working pressure: 10 bar
Medium temperature range: 0–100 °C

Code	Connection 1	Connection 2		
391067	1" F	1 1/4" M	1	-
391077	1 1/4" F	1 1/4" M	1	-

ACCESSORIES

Accessories



385

Shut-off ball cook, for distribution manifold outlets.
With handle.

Maximum working pressure: 10 bar
Medium temperature range: 5–100 °C

Code	Connection 1	Connection 2		
385000	23 p. 1,5 M	23 p.1,5 F captive nut	10	-



385

Shut-off ball cook, for distribution manifold outlets.
Without handle.

Maximum working pressure: 10 bar

Code	Connection 1	Connection 2		
385010	23 p. 1,5 M	23 p.1,5 F captive nut	15	150



386

Screw plug with nut, for distribution manifold outlets.

Code	Connection		
386000	23 p. 1,5	1	10



383

Female fitting - olive coupling.

Code	Connection 1	Connection 2		
383030	3/8" F	23 p. 1,5 M	10	-
383040	1/2" F	23 p. 1,5 M	10	-
383050	3/4" F	23 p. 1,5 M	10	-
383140	23 p.1,5 F	1/2" M	10	-
383150	23 p.1,5 F	3/4" M	10	-



383

Female fitting - olive coupling.

Finish: chrome plated

Code	Connection 1	Connection 2		
383151	23 p.1,5 F	3/4" M	10	-



383

Connection fitting with O-ring seal.
For use with 3/4" 347, 679 and 680 series.

Code	Connection 1	Connection 2		
383550	3/4" M	23 p.1,5 F	10	100



383

Female-female fitting.

Code	Connection 1	Connection 2		
383240	23 p.1,5 F	1/2" F	10	-



384

Male fitting - olive coupling.

Code	Connection 1	Connection 2		
384030	3/8" M	23 p. 1,5 M	10	-
384040	1/2" M	23 p. 1,5 M	10	-
384050	3/4" M	23 p. 1,5 M	10	-



384

Male fitting - olive coupling.

Finish: chrome plated

Code	Connection 1	Connection 2		
384031	23 p. 1,5 M	3/8" M	10	-
384041	23 p. 1,5 M	1/2" M	10	-



382

Fitting with 23 p.1,5 captive nut.

Maximum working pressure: 10 bar
Medium temperature range: 5–100 °C
Finish: chrome plated

Code	Connection 1	Connection 2		
382000	23 p. 1,5 M	23 p.1,5 F captive nut	10	-



383

Adapter with flat seat with O-Ring.
Transformation from 3/4″ Euroconus to 3/4″ flat seat.

Code	Connection		
383000	3/4″ M	100	-



392

Temperature gauge fitting.
For distribution manifolds 592 and 350 series.

Temperature gauge scale: 0–80 °C
Ø: 40 mm

Code	Connection 1	Connection 2	Notes		
392600	1″ F	1″ M	with PTFE seal	1	-
392700	1 1/4″ F	1 1/4″ M	without PTFE seal	1	-



657

Temperature gauge fitting.

Temperature gauge scale: 0–80 °C
Ø: 40 mm

Code	Connection 1	Connection 2		
657400	1/2″ M	1/2″ F	5	-



657

Temperature gauge fitting.
For distribution manifold outlets.

Temperature gauge scale: 0–80 °C
Ø: 40 mm

Code	Connection 1	Connection 2		
657050	3/4″ M	3/4″ F captive nut	1	12



669

Self cleaning flow meter.

Maximum working pressure: 6 bar
Medium temperature range: 5–80 °C
Flow meter scale: 1–4 l/min

Code	Connection 1	Connection 2		
669050	3/4″ M	3/4″ F captive nut	1	10



688

Temperature gauge with pocket.

Temperature gauge scale: 0–80 °C
Ø: 40 mm

Code	Connection		
688002	1/4″ M	2	-



3642

Reduction fitting.

Code	Connection 1	Connection 2		
364276	1″ F	1 1/4″ M	2	-



5991

End fitting.
For distribution manifolds 349, 350, 592, 650 and 663 series.

Code	Connection 1	Connection 2		
599153	3/4″ F	3/8″ F	2	-
599154	3/4″ F	1/2″ F	2	-
599163	1″ F	3/8″ F	2	-
599164	1″ F	1/2″ F	2	-
599173	1 1/4″ F	3/8″ F	2	-
599174	1 1/4″ F	1/2″ F	2	-



5993

Plug.
For distribution manifolds 349, 350, 592, 650 and 663 series.

Code	Connection		
599350	3/4″ F	2	10
599360	1″ F	2	10
599370	1 1/4″ F	2	10



5994

Double radial end fitting.
For distribution manifolds 349, 350, 592, 650 and 663 series.

Code	Manifold connection	Connection 1	Connection 2		
599453	3/4″ F	1/2″ F	3/8″ F	2	-
599454	3/4″ F	1/2″ F	1/2″ F	2	-
599463	1″ F	1/2″ F	3/8″ F	2	-
599464	1″ F	1/2″ F	1/2″ F	2	-
599473	1 1/4″ F	1/2″ F	3/8″ F	2	-
599474	1 1/4″ F	1/2″ F	1/2″ F	2	-



5995

Single radial end fitting.
For distribution manifolds 349, 350, 592, 650 and 663 series.

Code	Manifold connection	Connection 1		
599553	3/4″ F	3/8″ F	2	-
599563	1″ F	3/8″ F	2	-
599573	1 1/4″ F	3/8″ F	2	-



5996

Double radial end fitting.
For distribution manifolds 662 series.

Code	Manifold connection		
599660	1″ F	2	50



586

Female plug.

Code	Connection		
586300	3/8″ F	10	-
586400	1/2″ F	10	-
586600	1″ F	10	-



583

Female compression fitting for side outlets.

Code	Connection 1	Connection 2		
583034	3/8″ F olive	1/2″ M, Ø 16	10	-
583045	1/2″ F olive	1/2″ M, Ø 18	10	-
583064	1″ F olive	1/2″ M, Ø 16	10	-
583065	1″ F olive	1/2″ M, Ø 18	10	-



584

Male compression fitting for outlets.

Code	Connection 1	Connection 2		
584053	3/4″ M olive	3/8″ M, Ø 12	10	-
584054	3/4″ M olive	3/8″ M, Ø 16	10	-
584055	3/4″ M olive	3/4″ M, Ø 18	10	-
584065	3/4″ M olive	3/4″ M, Ø 18	10	-



585

Stiffener for copper pipe with wall thickness 0,75 and 1 mm.

Code	Connection	Thickness (mm)		
585010	Ø 10	0,75	100	-
585012	Ø 12	0,75	100	-
585014	Ø 14	0,75	100	-
585015	Ø 15	0,75	100	-
585016	Ø 16	0,75	100	-
585018	Ø 18	0,75	100	-
585110	Ø 10	1	100	-
585115	Ø 15	1	100	-
585116	Ø 16	1	100	-
585118	Ø 18	1	100	-



386

Screw plug with nut, for distribution manifold outlets.

Code	Connection		
386500	3/4″ F	1	10

FITTINGS

Fittings - threaded connections 23 p. 1.5



679 DARCAL

Fitting for multilayer plastic pipe for continuous high temperature use.

Maximum working pressure: 10 bar
Medium temperature range: 0–95 °C

Code	Connection	Pipe diameter		
679114	23 p. 1,5	Ø 14x2	10	100
679124	23 p. 1,5	Ø 16x2	10	100
679125	23 p. 1,5	Ø 16x2,25	10	100
679144	23 p. 1,5	Ø 18x2	10	100

For a correct use, adjust the multilayer pipe diameter before installation using the Caleffi calibrator 679 series.

Calibrator 679 series page 107

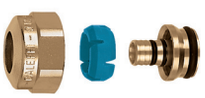

680 DARCAL

Self-adjustable diameter fitting for single and multilayer plastic pipes.
Working temperature range 5–80°C (PE-X); 5–75°C (Multi-layer marked 95°C).

Maximum working pressure: 10 bar

Code	Connection	Pipe diameter		
680000	23 p. 1,5	Øint. 7,5–8, Øext. 12–14	10	100
680002	23 p. 1,5	Øint. 9–9,5, Øext. 14–16	10	100
680001	23 p. 1,5	Øint. 9,5–10, Øext. 12–14	10	100
680006	23 p. 1,5	Øint. 9,5–10, Øext. 14–16	10	100
680015	23 p. 1,5	Øint. 10,5–11, Øext. 14–16	10	100
680017	23 p. 1,5	Øint. 10,5–11, Øext. 16–18	10	100
680024	23 p. 1,5	Øint. 11,5–12, Øext. 14–16	10	100
680026	23 p. 1,5	Øint. 11,5–12, Øext. 16–18	10	100
680035	23 p. 1,5	Øint. 12,5–13, Øext. 16–18	10	100
680044	23 p. 1,5	Øint. 13,5–14, Øext. 16–18	10	100



680 DARCAL

Self-adjustable diameter fitting for single and multilayer plastic pipes.
Working temperature range 5–80°C (PE-X); 5–75°C (Multi-layer marked 95°C).

Maximum working pressure: 10 bar

Code	Connection	Pipe diameter		
680055	23 p. 1,5	Øint. 14,5–15, Øext. 18–20	10	100
680064	23 p. 1,5	Øint. 15,5–16, Øext. 18–20	10	100



446

Mechanical fitting, monobloc, for soft annealed copper, hard copper and stainless steel pipes.
With O-Ring seal.

Maximum working pressure: 10 bar
Medium temperature range: -25–120 °C

Code	Connection	Pipe diameter		
446010	23 p. 1,5	Ø 10	2	100
446012	23 p. 1,5	Ø 12	2	100
446014	23 p. 1,5	Ø 14	2	100
446015	23 p. 1,5	Ø 15	2	100
446016	23 p. 1,5	Ø 16	2	100



347

Mechanical fitting for soft annealed copper, hard copper and stainless steel pipes.
With O-Ring seal.

Maximum working pressure: 10 bar
Medium temperature range: -25–120 °C

Code	Connection	Pipe diameter		
347010	23 p. 1,5	Ø 10	1	100
347012	23 p. 1,5	Ø 12	1	100
347014	23 p. 1,5	Ø 14	1	100
347015	23 p. 1,5	Ø 15	1	100
347016	23 p. 1,5	Ø 16	1	100

Fittings - 3/4" and 1" threaded connections

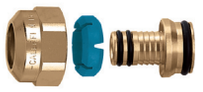

679 DARCAL

Fitting for multilayer pipes with continuous high temperature use.

Maximum working pressure: 10 bar
Medium temperature range: 0–95 °C

Code	Connection	Pipe diameter		
679514	3/4" F	Ø 14x2	10	100
679524	3/4" F	Ø 16x2	10	100
679525	3/4" F	Ø 16x2,25	10	100
679544	3/4" F	Ø 18x2	10	100
679564	3/4" F	Ø 20x2	10	100
679565	3/4" F	Ø 20x2,25	10	100
679566	3/4" F	Ø 20x2,5	10	100

For a correct use, adjust the multilayer pipe diameter before installation using the Caleffi calibrator 679 series.

Calibrator 679 series page 107

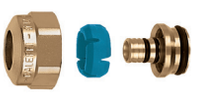

680 DARCAL

Self-adjustable diameter fitting for single and multilayer plastic pipes.
Working temperature range: 5–80 °C (PE-X), 5–75°C (Multi-layer marked 95°C).

Maximum working pressure: 10 bar

Code	Connection	Pipe diameter		
680507	3/4" F	Øint. 7,5–8, Øext. 10,5–12	10	100
680502	3/4" F	Øint. 7,5–8, Øext. 12–14	10	100
680503	3/4" F	Øint. 8,5–9, Øext. 12–14	10	100
680500	3/4" F	Øint. 9–9,5, Øext. 14–16	10	100
680501	3/4" F	Øint. 9,5–10, Øext. 12–14	10	100
680506	3/4" F	Øint. 9,5–10, Øext. 14–16	10	100
680515	3/4" F	Øint. 10,5–11, Øext. 14–16	10	100
680517	3/4" F	Øint. 10,5–11, Øext. 16–18	10	100
680524	3/4" F	Øint. 11,5–12, Øext. 14–16	10	100
680526	3/4" F	Øint. 11,5–12, Øext. 16–18	10	100
680535	3/4" F	Øint. 12,5–13, Øext. 16–18	10	100
680537	3/4" F	Øint. 12,5–13, Øext. 18–20	10	100
680544	3/4" F	Øint. 13,5–14, Øext. 16–18	10	100
680546	3/4" F	Øint. 13,5–14, Øext. 18–20	10	100
680555	3/4" F	Øint. 14,5–15, Øext. 18–20	10	100
680556	3/4" F	Øint. 15–15,5, Øext. 18–20	10	100
680564	3/4" F	Øint. 15,5–16, Øext. 18–20	10	100
680505	3/4" F	Øint. 17, Øext. 22	10	100



680

Self-adjustable diameter fitting for plastic pipes.

Maximum working pressure: 10 bar
Medium temperature range: 5–80 °C

Code	Connection	Internal pipe diameter	External pipe diameter		
680687	1" F	Øint. 17,5	Øext. 25	10	100
680605	1" F	Øint. 19,5	Øext. 25	10	100



347

Compression ends fitting for annealed copper, hard copper, mild steel and stainless steel pipes.
With O-Ring seal.

Maximum working pressure: 10 bar
Medium temperature range: -25–120 °C

Code	Connection	Pipe diameter		
347510	3/4" F	Ø 10	1	100
347512	3/4" F	Ø 12	1	100
347514	3/4" F	Ø 14	1	100
347515	3/4" F	Ø 15	1	100
347516	3/4" F	Ø 16	1	100
347518	3/4" F	Ø 18	1	10



680 DARCAL

Compression ends fitting for multilayer pipe with fitting Male -female.

Code	Connection	Pipe diameter		
680285	3/4" F	Ø 25x2,5	10	60
680296	3/4" F	Ø 26x3	10	60

Example: 680 series fitting selection

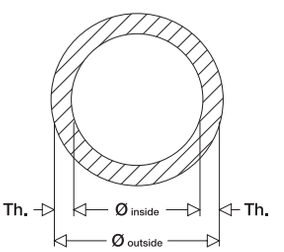

Known both the outside and inside diameters (**ex.: 17 mm** and **13 mm**);

or known the outside diameter (**ex.: Øo 17 mm**) and the thickness (**ex.: th. 2 mm**) and considering that:

Øoutside – 2 · th. = Øinside

17 – 2 · 2 = 13 mm

Look within the table for the code matching both diameters:

Code		$Ø_{inside}$	$Ø_{outside}$
680035	23 p.1,5	12,5–13	16–18

INSPECTION WALL BOXES AND WALL PORTS

Plastic inspection wall box



361

Plastic inspection wall port, with zinc plated sheet steel frame.

Finish: white

Code	Height (mm)	Width (mm)		
361032	320	250	1	5
361050	500	250	1	10



360

Plastic inspection wall box.
For distribution manifolds 349, 350, 592 and 354 series.
Version with foldable side walls.

Finish: white

Code	Height (mm)	Width (mm)	Depth (mm)		
360032	320	250	90	1	10
360050	500	250	90	1	10



363

Inspection wall port and frame in plastic.
Ventilated.

Finish: white

Code	Height (mm)	Width (mm)		
363036	360	270	1	10
363056	560	330	1	5
363073	730	360	1	5



362

Plastic inspection wall box.
Equipped with lateral protections.
For dual distribution manifolds 356, 357 series and single distribution manifolds 349, 350, 592 and 354 series.
Ventilated.

Finish: white

Code	Height (mm)	Width (mm)	Depth (mm)		
362036	360	270	100–80	1	10
362056	560	330	100–80	1	5
362073	730	360	100–80	1	5



360

Pair of mounting brackets for 3/4" and 1" dual distribution manifolds 356, 356 IS and 357 series.
For plastic inspection boxes 360 and 362 series.

Code		
360003	1	-



360

Pair of stainless steel mounting brackets for distribution manifolds 354 series.
For plastic inspection boxes 360 and 362 series.

Code		
360210	1	10



360

Mounting brackets for 1" single distribution manifolds 350 and 592 series, for 3/4" and 1" distribution manifolds 351 and 598 series.
For plastic inspection boxes 360 and 362 series.
Included in pack:
- 2 long supports;
- 2 short supports.

Code		
360001	1	10



360

Mounting brackets for 3/4" single distribution manifolds 349, 350 and 592 series.
For plastic inspection boxes 360 and 362 series.
Complete with:
– N. 2 long brackets
– N. 2 short brackets.

Code		
360002	1	10



362

Mounting brackets for dual distribution manifolds 356 and 357 series.
For plastic inspection boxes 362 series.

Code		
362001	1	10

Sheet steel inspection wall boxes

ADJUSTABLE DEPTH from 110 to 140 mm



659

Inspection wall box with **adjustable depth (110-140 mm)**.

Material: painted metal sheet

Code	Height (mm)	Width (mm)	Depth (mm)		
659044	500	400	110–140	1	-
659064	500	600	110–140	1	-
659084	500	800	110–140	1	-
659104	500	1000	110–140	1	-
659124	500	1200	110–140	1	-



659

Inspection wall port with frame.

Material: painted metal sheet

Code	Article use		
659304	659044	1	-
659306	659064	1	-
659308	659084	1	-
659310	659104	1	-
659312	659124	1	-

ADJUSTABLE DEPTH from 80 to 120 mm



659

Inspection wall box with **adjustable depth (80-120 mm)**.
Complete with specific support for manifold brackets.
Closure with a push-fit clamp.
For distribution manifolds 349, 350, 592, 662, 671, 664 and 665 series.

Material: painted metal sheet

Code	Height (mm)	Width (mm)	Depth (mm)		
659045	500	400	80–120	1	-
659065	500	600	80–120	1	-
659085	500	800	80–120	1	-
659105	500	1000	80–120	1	-



659

Inspection wall port with frame.

Material: painted metal sheet

Code	Article use		
659504	659045	1	-
659506	659065	1	-
659508	659085	1	-
659510	659105	1	-

Brackets for inspection wall boxes



658

Pair of mounting brackets 592, 350 and 351 series.
Complete with insulating clamps, screws and wall anchors.
To be used with boxes 659 series or directly wall mounted.

Code		
658000	1	20



658

Pair of steel mounting brackets for distribution manifolds 662 and 664 series.
To be used with boxes code 659..5 or directly wall mounted.

Code		
658101	1	20



658

Pair of mounting brackets for distribution manifolds 663 and 668...S1 series.
Complete with screws and wall anchors.
To be used with boxes 659 series or directly wall mounted.

Code		
658100	1	20



658

Pair of mounting brackets for 3/4" and 1" distribution manifolds 350 and 592 series.
Complete with clamps and screws.
To connect manifolds to zone valves.
To be used with boxes 659 series.

Code		
658200	1	25

RADIANT PANEL SYSTEM CONTROL

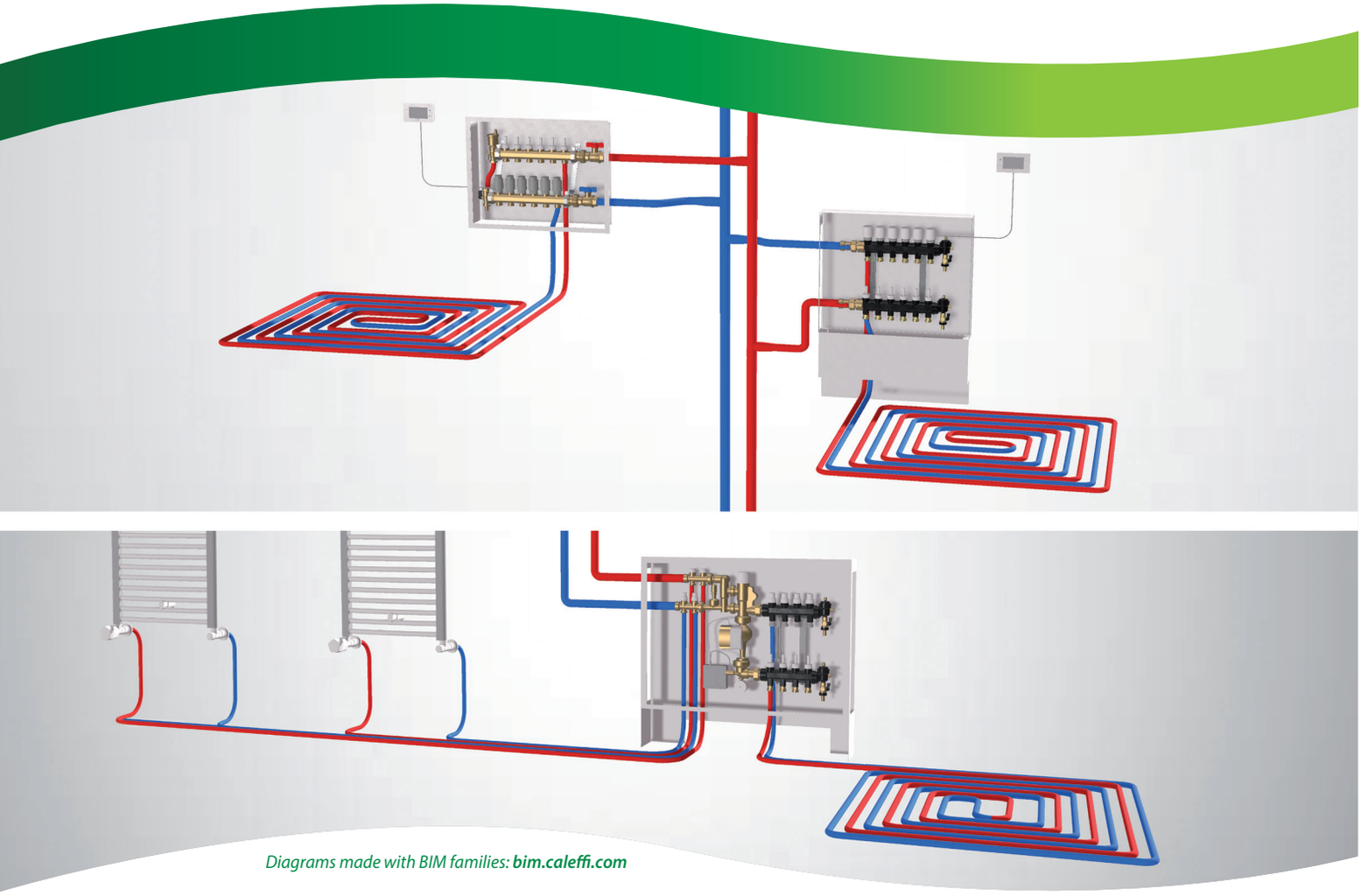

Diagrams made with BIM families: ***bim.caleffi.com***

Distribution manifolds for radiant panel systems
Regulating units for radiant panel systems
Thermo-electric actuators
Inspection wall boxes and wall ports

MANIFOLDS FOR RADIANT PANEL SYSTEMS

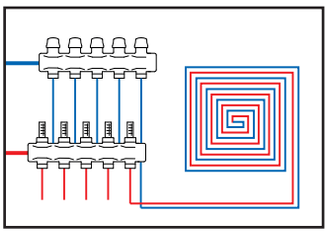

Manifolds for radiant panel systems are used for optimal distribution of the heating medium in floor heating system circuits and ultimately to improve heat emission control.

They are composed of:

- flow manifold; complete with flow meters and built-in regulating valves;
- return manifold; complete with shut-off valves with facility for thermo-electric actuator;
- end fittings complete with automatic valve and manual air vent with filler/drain cocks.

Modulating temperature regulating units or set point thermostatic regulating units can be coupled with the distribution manifolds.

Distribution manifolds

- Technopolymer distribution manifolds

- Differential pressure control valve for distribution manifolds

- Accessories for distribution manifolds

- Brass distribution manifolds

- Dynamic distribution manifolds

Distribution manifolds with regulating unit

- Modulating temperature regulating unit with digital temperature

- Set point thermostatic regulating unit

- Set point thermostatic regulating unit with medium distribution kit for primary circuit

- Thermostatic mixing valve for radiant panel systems

Thermo-electric actuators and boxes for distribution manifolds

- Thermo-electric actuators

- Boxes for distribution manifolds

DISTRIBUTION MANIFOLDS FOR RADIANT PANEL SYSTEMS

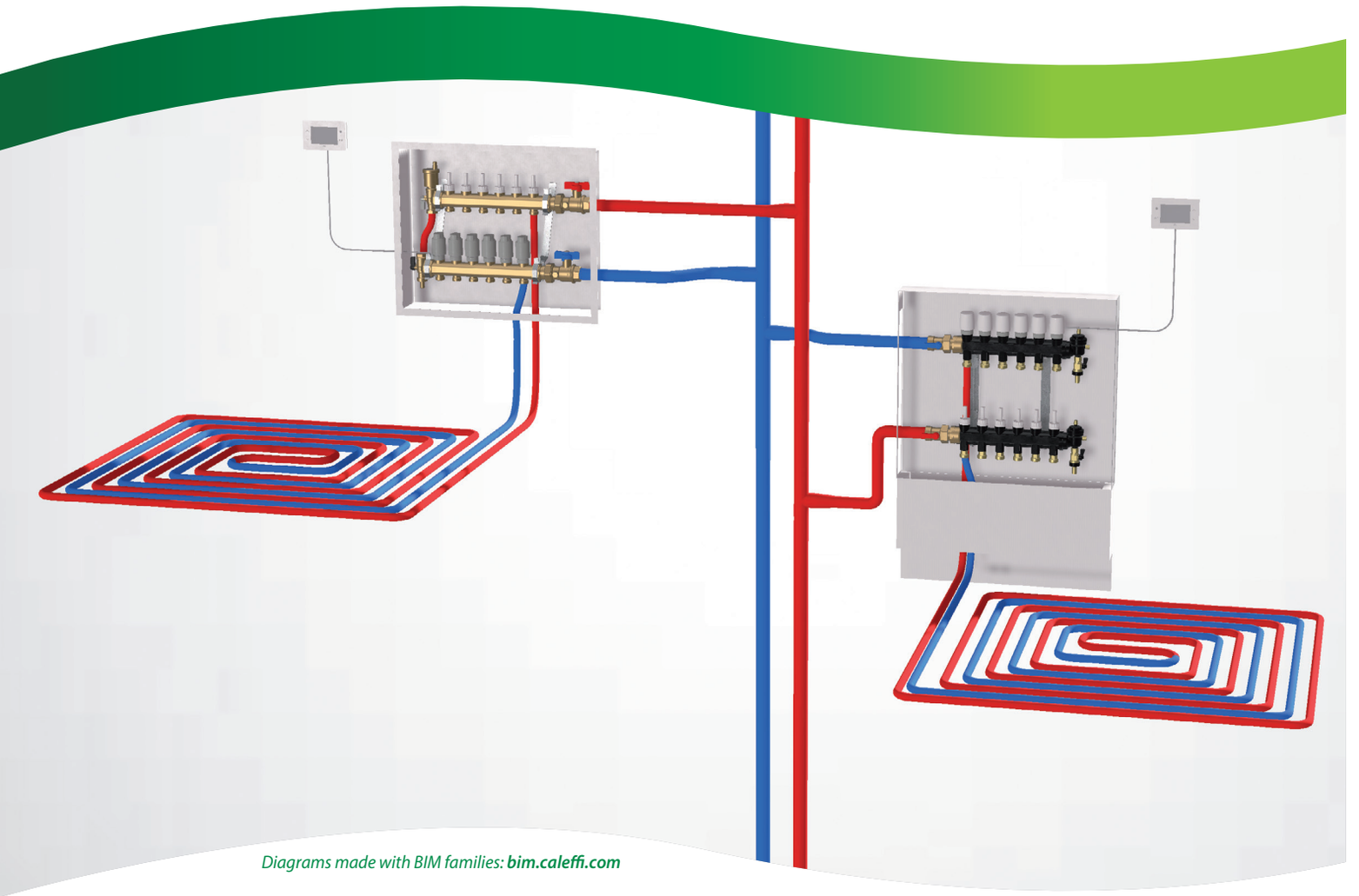

Diagrams made with BIM families: ***bim.caleffi.com***

Technopolymer distribution manifolds with manual balancing, 1" connections
Accessories for technopolymer manifolds
Brass manifolds with micrometric preregulating valves, 1" connections
Brass manifolds with flow rate balancing valves, 1" connections
Dynamic distribution manifolds in brass, 1" connections
Accessories for distribution manifolds 1"
Changeover and distribution unit radiant panel fan-coil system
Brass distribution manifolds for radiant panel systems, connections 1" and 1 1/4"

DISTRIBUTION MANIFOLDS FOR RADIANT PANEL SYSTEMS

Technopolymer distribution manifolds with manual balancing, 1" connections

671

Pre-assembled distribution manifold.
Complete with:
- technopolymer flow manifold with built-in flow meters and flow rate balancing valves;
- technopolymer return manifold with built-in shut-off valves fitted for thermo-electric actuator;
- technopolymer end fittings with automatic air vent with hygroscopic cap, discharge valve and fill/drain cock;
- pair of ball shut-off valves;
- LCD thermometers on flow and return manifolds;
- adhesive labels indicating the rooms;
- pair of mounting brackets for box or wall mounting;
- coupling adapter with clip code 675850, for manifold outlets (in package);
- template for cutting pipe code 675002 (in package).

Maximum working pressure: 6 bar
Medium temperature range: 5–60 °C

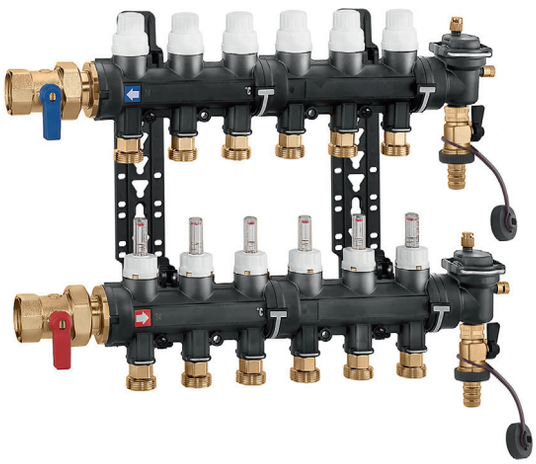

Code	Main connection	Outlet connection		
6716C1	1" F	3/4" M - 3 out.	1	-
6716D1	1" F	3/4" M - 4 out.	1	-
6716E1	1" F	3/4" M - 5 out.	1	-
6716F1	1" F	3/4" M - 6 out.	1	-
6716G1	1" F	3/4" M - 7 out.	1	-
6716H1	1" F	3/4" M - 8 out.	1	-
6716I1	1" F	3/4" M - 9 out.	1	-
6716L1	1" F	3/4" M - 10 out.	1	-
6716M1	1" F	3/4" M - 11 out.	1	-
6716N1	1" F	3/4" M - 12 out.	1	-
6716O1	1" F	3/4" M - 13 out.	1	-
6716P1	1" F	3/4" M - 14 out.	1	-

Accessories for technopolymer manifolds



675

Technopolymer end fitting.
Complete with automatic air vent with hygroscopic cap, discharge valve, fill/drain cock.

Maximum working pressure: 6 bar
Medium temperature range: 5–60 °C

Code	Connection		
675800	1 1/4" F	20	-



675

Push-fit thermometer for panel piping.
Thermo-conductive paste supplied in package.
For pipes with outer diameter from 15 to 18 mm.
Thermal medium: Alcohol.

Temperature gauge scale: 5–50 °C

Code		
675900	10	100



675

Coupling adapter with clip.
For 671 series manifolds and 182 series regulating units.

Code	Connection 1	Connection 2		
675850	3/4" M	Ø 18	1	40



675

Cutting pipe template.

Code		
675002	10	-



182

Differential by-pass kit with fixed setting 25 kPa (2.500 mm w.g.).
Complete with flexible hose.
For 182 series regulating units and 670 and 671 series manifolds.

Maximum working pressure: 10 bar
Medium temperature range: 0–100 °C

Code	Connection		
182000	3/4" F	1	5

Brass manifolds with micrometric preregulating valves, 1" connections

662

Pre-assembled distribution manifold.
Complete with:
- return manifold with built-in shut-off valves fitted for thermo-electric actuator;
- flow manifold **with micrometric preregulating valves**;
- end fittings with automatic air vent and drain cock;
- polymer mounting brackets with adjustable centre distance for use with box 659 series or for direct wall mounting.

Maximum working pressure: 10 bar
Medium temperature range: 5–80 °C
Outlet centre distance: 50 mm



Code	Connection	Outlet connection		
6626B6	1" F	3/4" M - 2 out.	1	-
6626C6	1" F	3/4" M - 3 out.	1	-
6626D6	1" F	3/4" M - 4 out.	1	-
6626E6	1" F	3/4" M - 5 out.	1	-
6626F6	1" F	3/4" M - 6 out.	1	-
6626G6	1" F	3/4" M - 7 out.	1	-
6626H6	1" F	3/4" M - 8 out.	1	-
6626I6	1" F	3/4" M - 9 out.	1	-
6626L6	1" F	3/4" M - 10 out.	1	-
6626M6	1" F	3/4" M - 11 out.	1	-
6626N6	1" F	3/4" M - 12 out.	1	-
6626O6	1" F	3/4" M - 13 out.	1	-

662

Pair of manifolds.
Complete with:
- return manifold with built-in shut-off valves fitted for thermo-electric actuator;
- flow manifold **with micrometric preregulating valves**.

Maximum working pressure: 10 bar
Medium temperature range: 5–80 °C
Outlet centre distance: 50 mm



Code	Inlet connection	Outlet connection	Outlet connection		
662626	1" F	1" M	3/4" M - 2 out.	1	5
662636	1" F	1" M	3/4" M - 3 out.	1	5
662646	1" F	1" M	3/4" M - 4 out.	1	4
662656	1" F	1" M	3/4" M - 5 out.	1	4
662666	1" F	1" M	3/4" M - 6 out.	1	4



658

Polymer mounting brackets with adjustable centre distance, for distribution manifolds 662 and 664 series.
To be used with boxes code 659.4 (depth 110–140 mm), or directly wall mounted.
Complete with screws and wall anchors.

Code		
658400	1	5



5996

Return end fitting.
Complete with air vent and automatic shut-off cock.

Medium temperature range: 0–100 °C
Maximum air discharge pressure: 2,5 bar

Code	Connection		
599678	1" F	1	10



5996

Flow end fitting.
Complete with manual air vent and automatic shut-off cock.

Maximum working pressure: 6 bar
Maximum air discharge pressure: 2,5 bar
Medium temperature range: 5–60 °C

Code	Connection		
599679	1" F	1	10

Brass manifolds with flow rate balancing valves, 1" connections

664

Pre-assembled distribution manifold.
Complete with:
- return manifold with built-in shut-off valves fitted for thermo-electric actuator;
- flow manifold **complete with flow meters 0–5 l/min scale** and flow rate balancing valves;
- end fittings with automatic air vent and drain cock;
- steel mounting brackets for use with box or for direct wall mounting.

Maximum working pressure: 6 bar
Medium temperature range: 5–60 °C
Outlet centre distance: 50 mm
Flow rate regulation range: 0–5 l/min

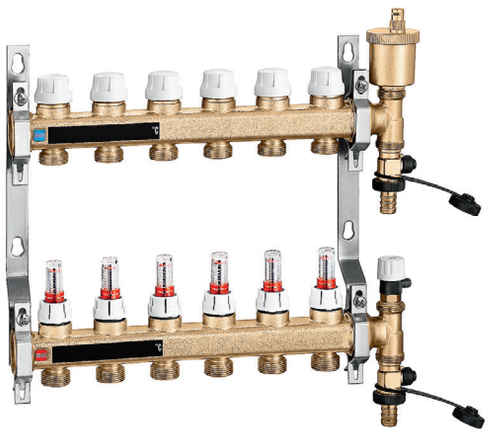

Code	Main connection	Outlet connection		
6646B1	1" F	3/4" M - 2 out.	1	-
6646C1	1" F	3/4" M - 3 out.	1	-
6646D1	1" F	3/4" M - 4 out.	1	-
6646E1	1" F	3/4" M - 5 out.	1	-
6646F1	1" F	3/4" M - 6 out.	1	-
6646G1	1" F	3/4" M - 7 out.	1	-
6646H1	1" F	3/4" M - 8 out.	1	-
6646I1	1" F	3/4" M - 9 out.	1	-
6646L1	1" F	3/4" M - 10 out.	1	-
6646M1	1" F	3/4" M - 11 out.	1	-
6646N1	1" F	3/4" M - 12 out.	1	-
6646O1	1" F	3/4" M - 13 out.	1	-

664

Pair of manifolds.
Complete with:
- return manifold with built-in shut-off valves fitted for thermo-electric actuator;
- flow manifold **complete with flow meters 0–5 l/min scale** and flow rate balancing valves.

Maximum working pressure: 6 bar
Medium temperature range: 5–60 °C
Outlet centre distance: 50 mm



Code	Inlet connection	Outlet connection	Outlet connection		
664621	1" F	1" M	3/4" M - 2 out.	1	-
664631	1" F	1" M	3/4" M - 3 out.	1	-
664641	1" F	1" M	3/4" M - 4 out.	1	-
664651	1" F	1" M	3/4" M - 5 out.	1	-
664661	1" F	1" M	3/4" M - 6 out.	1	-



658

Pair of steel mounting brackets for distribution manifolds 662 and 664 series.
To be used with boxes code 659..5 or directly wall mounted.

Code		
658101	1	20



5996

Return end fitting.
Complete with air vent and automatic shut-off cock.

Medium temperature range: 0–100 °C
Maximum air discharge pressure: 2,5 bar

Code	Connection		
599678	1" F	1	10



5996

Flow end fitting.
Complete with manual air vent and automatic shut-off cock.

Maximum working pressure: 6 bar
Maximum air discharge pressure: 2,5 bar
Medium temperature range: 5–60 °C

Code	Connection		
599679	1" F	1	10

Dynamic distribution manifolds in brass, 1" connections

665 DYNAMICAL®

Pre-assembled distribution manifold.
Complete with:
- return manifold complete with DYNAMICAL flow regulating valves fitted for thermo-electric actuator;
- flow manifold complete with micrometric preregulation valves;
- end fittings consisting of air vent cocks, double radial end fittings and plug;
- pair of mounting polymer brackets with adjustable centre distance for 659 series box or wall mounting.

DYNAMICAL CARTRIDGE PATENT

Maximum working pressure: 6 bar
Medium temperature range: 5–60 °C
Outlet centre distance: 50 mm
Flow rate regulation range: 25–150 l/h

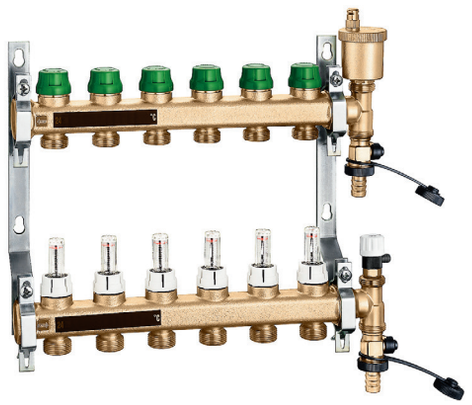

Code	Main connection	Outlet connection		
6656D1	1"F	3/4" M - 4 out.	1	-
6656E1	1"F	3/4" M - 5 out.	1	-
6656F1	1"F	3/4" M - 6 out.	1	-
6656G1	1"F	3/4" M - 7 out.	1	-
6656H1	1"F	3/4" M - 8 out.	1	-
6656I1	1"F	3/4" M - 9 out.	1	-
6656L1	1"F	3/4" M - 10 out.	1	-
6656M1	1"F	3/4" M - 11 out.	1	-
6656N1	1"F	3/4" M - 12 out.	1	-

Function

The DYNAMICAL® valve allows the **automatic dynamic balancing** and **pressure-independent adjustment** of the thermal medium in the radiators of two-pipe heating systems.
The device, in conjunction with a thermostatic, electronic or thermo-electric control, combines different functions in a single component.

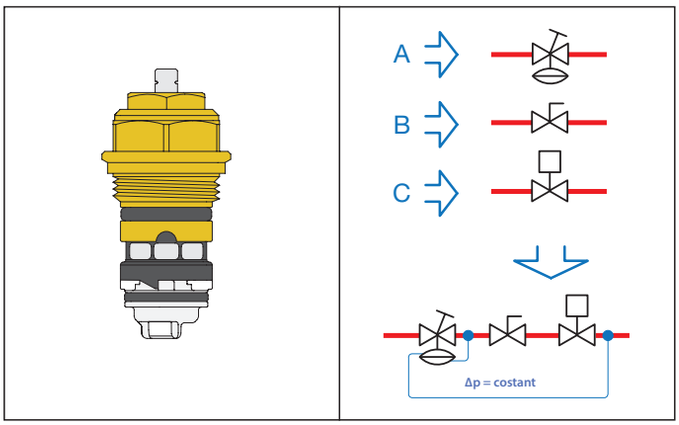

A. Differential pressure regulator, which automatically cancels the effect of the pressure fluctuations typical of variable flow rate systems and prevents noisy operation.

B. Device for pre-setting flow rate, which allows direct setting of the maximum flow rate value, thanks to the combination with the differential pressure regulator.

C. Flow rate control depending on the ambient temperature, thanks to the combination with a thermostatic control head. The flow rate control is optimised because it is pressure-independent.

Accessories for distribution manifolds 1”



664

Insulation for distribution manifolds 662, 664 and 665 series.
For heating and cooling systems.
For use with box code 659..4 (adjustable depth from 110 to 140 mm).

Code	Notes		
CBN6646F1	for manifolds with 2 to 6 outlets	35	-
CBN6646N1	for manifolds with 7 to 12 outlets	20	-
CBN6646O1	for manifolds with 13 outlets	1	-

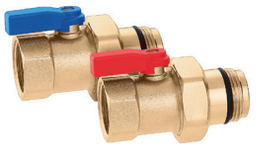

391

Pair of ball shut-off valves with O-Ring seal.
For distribution manifolds 664 and 665 series.

Maximum working pressure: 10 bar
Medium temperature range: 5–100 °C

Code	Pipe connection	Manifold connection		
391066	1”F	1”M	1	10



662

Off-centre by-pass assembly with fixed setting.
For 664 and 665 series manifolds.

Maximum working pressure: 10 bar
Medium temperature range: -10–110 °C
Differential pressure fixed setting: 25 kPa

Code		
662010	1	20



680 DARCAL

Self-adjustable diameter fitting for single and multilayer plastic pipes.
Working temperature range: 5–80 °C (PE-X), 5–75°C (Multi-layer marked 95°C).

Maximum working pressure: 10 bar

Code	Connection	Pipe diameter		
680507	3/4”F	Øint. 7,5–8, Øext. 10,5–12	10	100
680502	3/4”F	Øint. 7,5–8, Øext. 12–14	10	100
680503	3/4”F	Øint. 8,5–9, Øext. 12–14	10	100
680500	3/4”F	Øint. 9–9,5, Øext. 14–16	10	100
680501	3/4”F	Øint. 9,5–10, Øext. 12–14	10	100
680506	3/4”F	Øint. 9,5–10, Øext. 14–16	10	100
680515	3/4”F	Øint. 10,5–11, Øext. 14–16	10	100
680517	3/4”F	Øint. 10,5–11, Øext. 16–18	10	100
680524	3/4”F	Øint. 11,5–12, Øext. 14–16	10	100
680526	3/4”F	Øint. 11,5–12, Øext. 16–18	10	100
680535	3/4”F	Øint. 12,5–13, Øext. 16–18	10	100
680537	3/4”F	Øint. 12,5–13, Øext. 18–20	10	100
680544	3/4”F	Øint. 13,5–14, Øext. 16–18	10	100
680546	3/4”F	Øint. 13,5–14, Øext. 18–20	10	100
680555	3/4”F	Øint. 14,5–15, Øext. 18–20	10	100
680556	3/4”F	Øint. 15–15,5, Øext. 18–20	10	100
680564	3/4”F	Øint. 15,5–16, Øext. 18–20	10	100
680505	3/4”F	Øint. 17, Øext. 22	10	100



386

Screw plug with nut, for distribution manifold outlets.

Code	Connection		
386500	3/4”F	1	10



675

Push-fit thermometer for panel piping.
Thermo-conductive paste supplied in package.
For pipes with outer diameter from 15 to 18 mm.
Thermal medium: Alcohol.

Temperature gauge scale: 5–50 °C

Code		
675900	10	100

Brass distribution manifolds for radiant panel systems, connections 1" and 1 1/4"

668...S1

Pre-assembled distribution manifold. 1" and 11/4" connections.
Equipped with:
- flow manifold with built-in flow meters and flow rate balancing valves;
- return manifold with built-in shut-off valves fitted for thermo-electric actuator;
- end fittings with multi-position ball valve, automatic air vent and fill/drain hose connection;
- off-centre by-pass kit with fixed setting and with connecting pipe;
- ball shut-off valves;
- mounting brackets for box or wall mounting.

Maximum working pressure: 10 bar
Medium temperature range: 0–80 °C

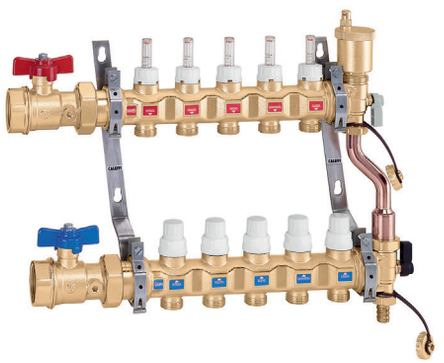

Code	Main connection	Outlet connection		
6686C5S1	1"F	3/4" M - 3 out.	1	-
6686D5S1	1"F	3/4" M - 4 out.	1	-
6686E5S1	1"F	3/4" M - 5 out.	1	-
6686F5S1	1"F	3/4" M - 6 out.	1	-
6686G5S1	1"F	3/4" M - 7 out.	1	-
6686H5S1	1"F	3/4" M - 8 out.	1	-
6686I5S1	1"F	3/4" M - 9 out.	1	-
6686L5S1	1"F	3/4" M - 10 out.	1	-
6686M5S1	1"F	3/4" M - 11 out.	1	-
6686N5S1	1"F	3/4" M - 12 out.	1	-
6686O5S1	1"F	3/4" M - 13 out.	1	-
6686P5S1	1"F	3/4" M - 14 out.	1	-
6687C5S1	1 1/4"F	3/4" M - 3 out.	1	-
6687D5S1	1 1/4"F	3/4" M - 4 out.	1	-
6687E5S1	1 1/4"F	3/4" M - 5 out.	1	-
6687F5S1	1 1/4"F	3/4" M - 6 out.	1	-
6687G5S1	1 1/4"F	3/4" M - 7 out.	1	-
6687H5S1	1 1/4"F	3/4" M - 8 out.	1	-
6687I5S1	1 1/4"F	3/4" M - 9 out.	1	-
6687L5S1	1 1/4"F	3/4" M - 10 out.	1	-
6687M5S1	1 1/4"F	3/4" M - 11 out.	1	-
6687N5S1	1 1/4"F	3/4" M - 12 out.	1	-
6687O5S1	1 1/4"F	3/4" M - 13 out.	1	-
6687P5S1	1 1/4"F	3/4" M - 14 out.	1	-

668...S1



Pair of distribution manifolds.
Complete with built-in flow meters, flow rate balancing valves and shut-off valves.

Maximum working pressure: 10 bar
Medium temperature range: 0–80 °C
Outlet centre distance: 50 mm

Code	Main connection	Outlet connection		
668735S1	1 1/4"F	3/4" M - 3 out.	1	6
668745S1	1 1/4"F	3/4" M - 4 out.	1	6
668755S1	1 1/4"F	3/4" M - 5 out.	1	5
668765S1	1 1/4"F	3/4" M - 6 out.	1	3
668775S1	1 1/4"F	3/4" M - 7 out.	1	3
668785S1	1 1/4"F	3/4" M - 8 out.	1	3

667...S1



Flow manifold.
Complete with built-in flow meters and flow rate balancing valves.

Maximum working pressure: 10 bar
Medium temperature range: 0–80 °C
Outlet centre distance: 50 mm

Code	Main connection	Outlet connection		
667735S1	1 1/4"F	3/4" M - 3 out.	2	12
667745S1	1 1/4"F	3/4" M - 4 out.	2	12
667755S1	1 1/4"F	3/4" M - 5 out.	2	12
667765S1	1 1/4"F	3/4" M - 6 out.	2	-
667775S1	1 1/4"F	3/4" M - 7 out.	2	-
667785S1	1 1/4"F	3/4" M - 8 out.	2	-

666...S1



Return manifold.
Complete with built-in shut-off valve fitted for thermo-electric actuator.

Maximum working pressure: 10 bar
Medium temperature range: 0–80 °C
Outlet centre distance: 50 mm

Code	Main connection	Outlet connection		
666735S1	1 1/4"F	3/4" M - 3 out.	2	12
666745S1	1 1/4"F	3/4" M - 4 out.	2	12
666755S1	1 1/4"F	3/4" M - 5 out.	2	12
666765S1	1 1/4"F	3/4" M - 6 out.	2	-
666775S1	1 1/4"F	3/4" M - 7 out.	2	-
666785S1	1 1/4"F	3/4" M - 8 out.	2	-



668...S1

Off-centre by-pass kit with fixed setting.
Complete with manifold connecting pipe.
For 668.S1 series manifolds.

Maximum working pressure: 10 bar
Medium temperature range: 0–100 °C
Pressure setting: 25 kPa

Code	Connection 1	Connection 2		
668000S1	1″ F captive nut	3/4″ F captive nut	1	10



391...S1

Pair of ball shut-off valves.
With Ø40 temperature gauge.

Maximum working pressure: 10 bar
Medium temperature range: 0–100 °C
Temperature gauge scale: 0–80 °C

Code	Pipe connection	Manifold connection		
391167S1	1″ F	1 1/4″ M	1	5
391177S1	1 1/4″ F	1 1/4″ M	1	5



391...S1

Pair of ball shut-off valves.
With temperature gauge connection.

Maximum working pressure: 10 bar
Medium temperature range: 0–100 °C

Code	Pipe connection	Manifold connection		
391067S1	1″ F	1 1/4″ M	1	-
391077S1	1 1/4″ F	1 1/4″ M	1	-



5996

Flow end fitting.
Complete with:
- two-position ball valve;
- automatic air vent with hygroscopic cap;
- filler/drain hose connection.

Maximum working pressure: 10 bar
Maximum air discharge pressure: 2,5 bar
Medium temperature range: 0–100 °C

Code	Connection		
599674	1 1/4″ F	1	10



5996

Return end fitting.
Complete with:
- double radial fitting complete with three-position ball valve;
- by-pass connection with plug and filler/drain hose connection.

Maximum working pressure: 10 bar
Medium temperature range: 0–100 °C

Code	Connection		
599675	1 1/4″ F	1	10



3642...S1

Reduction fitting.

Code	Connection 1	Connection 2		
364276S1	1″ F	1 1/4″ M	2	10



347...S1

Compression fitting.

Maximum working pressure: 10 bar
Medium temperature range: -25–120 °C

Code	Connection	Pipe diameter		
347512S1	3/4″ F	Ø 12	1	50
347514S1	3/4″ F	Ø 14	1	50



5020

Automatic air vent with hygroscopic cap.
For 668...S1 manifold end fittings.

Maximum working pressure: 10 bar
Maximum air discharge pressure: 2,5 bar
Medium temperature range: 0–110 °C
Material: brass

Code	Connection		
502043	1/2″ M	10	50



658

Pair of mounting brackets for distribution manifolds 663 and 668...S1 series.
Complete with screws and wall anchors.
To be used with boxes 659 series or directly wall mounted.

Code		
658100	1	20

DISTRIBUTION MANIFOLDS WITH REGULATING UNIT

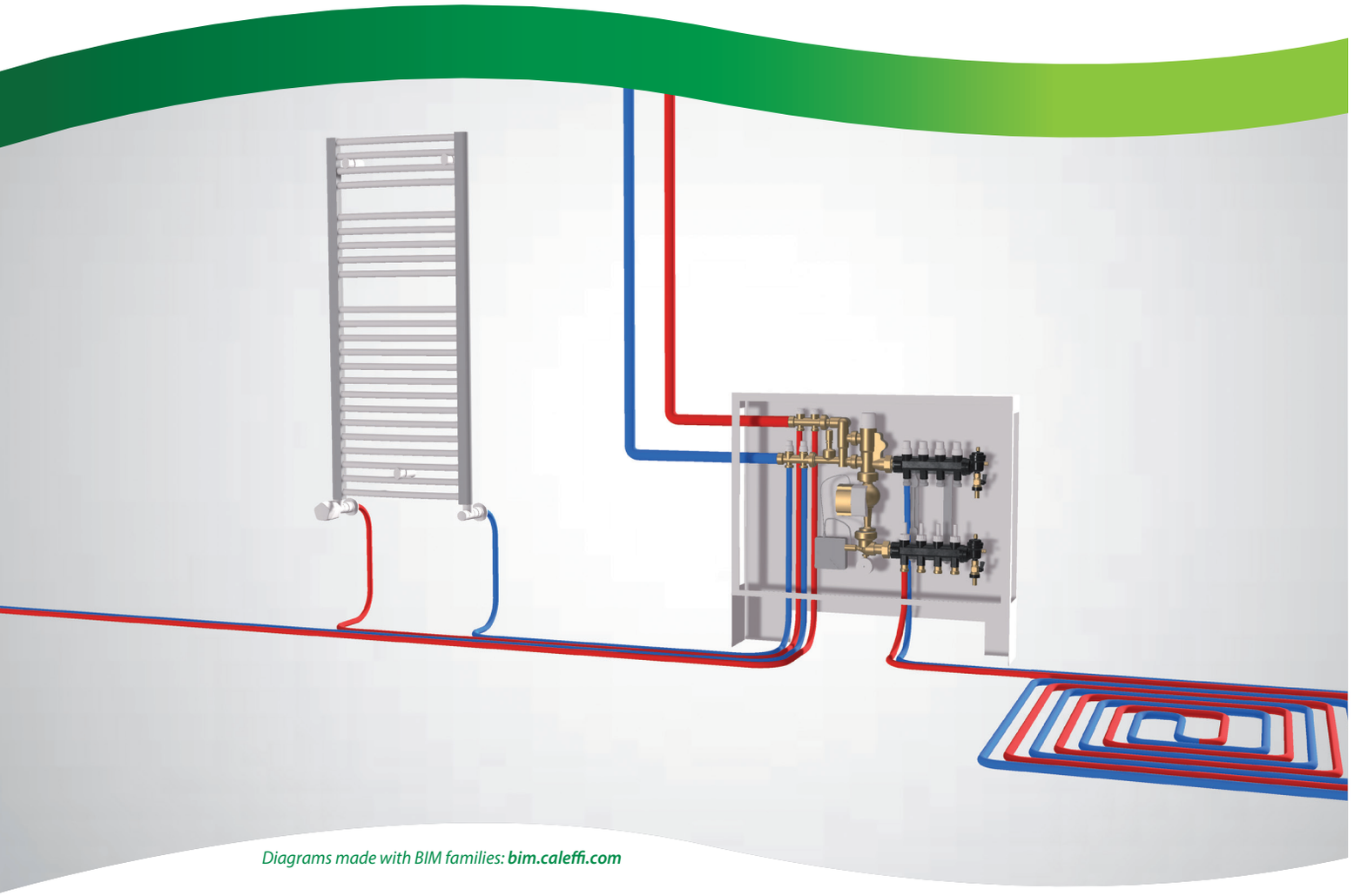

Diagrams made with BIM families: ***bim.caleffi.com***

Set point thermostatic regulating units
Set point thermostatic regulating unit with medium distribution kit for primary circuit
Set point thermostatic regulating units, brass
Accessories for set point thermostatic regulating unit
Spare parts for set point thermostatic regulating units
Modulating temperature regulating unit with digital regulator
Accessories and spare parts for modulating temperature regulating unit
Thermostatic mixing valve for radiant panel systems

REGULATING UNITS FOR RADIANT PANEL SYSTEMS

Set point thermostatic regulating units

182

Set point regulating unit pre-assembled in inspection wall box.
Complete with:
- set point thermostatic regulating unit;
- distribution manifolds in composite with built-in flow meters and shut-off valves;
- safety thermostat;
- high-efficiency pump;
- inspection wall box, with floor supports.

Maximum working pressure: 6 bar
Adjustment temperature range: 25–55 °C
Electric supply: 230 V AC

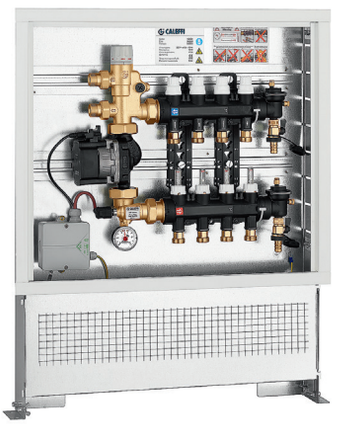

CE

Code	Main connection	Outlet connection		
1825C1A2L	3/4" M	3/4" M - 3 out.	1	-
1825D1A2L	3/4" M	3/4" M - 4 out.	1	-
1825E1A2L	3/4" M	3/4" M - 5 out.	1	-
1825F1A2L	3/4" M	3/4" M - 6 out.	1	-
1825G1A2L	3/4" M	3/4" M - 7 out.	1	-
1825H1A2L	3/4" M	3/4" M - 8 out.	1	-
1825I1A2L	3/4" M	3/4" M - 9 out.	1	-
1825L1A2L	3/4" M	3/4" M - 10 out.	1	-
1825M1A2L	3/4" M	3/4" M - 11 out.	1	-
1825N1A2L	3/4" M	3/4" M - 12 out.	1	-
1825O1A2L	3/4" M	3/4" M - 13 out.	1	-

182

Set point regulating unit pre-assembled in inspection wall box.
Complete with:
- set point thermostatic regulating unit;
- distribution manifolds in composite with built-in flow meters and shut-off valves;
- safety thermostat;
- high efficiency pump.

Maximum working pressure: 6 bar
Adjustment temperature range: 25–55 °C
Electric supply: 230 V AC

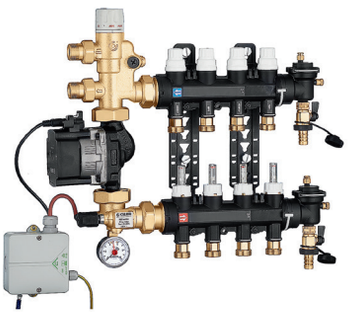

CE

Code	Main connection	Outlet connection		
1825C5A2L	3/4" M	3/4" M - 3 out.	1	-
1825D5A2L	3/4" M	3/4" M - 4 out.	1	-
1825E5A2L	3/4" M	3/4" M - 5 out.	1	-
1825F5A2L	3/4" M	3/4" M - 6 out.	1	-
1825G5A2L	3/4" M	3/4" M - 7 out.	1	-
1825H5A2L	3/4" M	3/4" M - 8 out.	1	-
1825I5A2L	3/4" M	3/4" M - 9 out.	1	-
1825L5A2L	3/4" M	3/4" M - 10 out.	1	-
1825M5A2L	3/4" M	3/4" M - 11 out.	1	-
1825N5A2L	3/4" M	3/4" M - 12 out.	1	-
1825O5A2L	3/4" M	3/4" M - 13 out.	1	-

Set point thermostatic regulating unit with medium distribution kit for primary circuit

182

Set point regulating unit pre-assembled in inspection wall box, with medium distribution kit for primary circuit.
Complete with:
- set point thermostatic regulating unit;
- medium distribution kit with built-in lockshields and shut-off valves for primary circuit;
- distribution manifolds in composite with built-in flow meters and shut-off valves;
- primary circuit by-pass kit;
- safety thermostat;
- high-efficiency pump;
- inspection wall box, with floor supports.

Maximum working pressure: 6 bar
Adjustment temperature range: 25–55 °C
Electric supply: 230 V AC



CE

Code	Main connection	Outlet connection	Radiator connection		
1826C1A2L 002	1" F	3/4" M - 3 out.	3/4" M - 2 out.	1	-
1826D1A2L 002	1" F	3/4" M - 4 out.	3/4" M - 2 out.	1	-
1826E1A2L 002	1" F	3/4" M - 5 out.	3/4" M - 2 out.	1	-
1826F1A2L 002	1" F	3/4" M - 6 out.	3/4" M - 2 out.	1	-
1826G1A2L 002	1" F	3/4" M - 7 out.	3/4" M - 2 out.	1	-
1826H1A2L 002	1" F	3/4" M - 8 out.	3/4" M - 2 out.	1	-
1826I1A2L 002	1" F	3/4" M - 9 out.	3/4" M - 2 out.	1	-
1826L1A2L 002	1" F	3/4" M - 10 out.	3/4" M - 2 out.	1	-
1826M1A2L 002	1" F	3/4" M - 11 out.	3/4" M - 2 out.	1	-
1826N1A2L 002	1" F	3/4" M - 12 out.	3/4" M - 2 out.	1	-
1826O1A2L 002	1" F	3/4" M - 13 out.	3/4" M - 2 out.	1	-

182

Set point regulating unit pre-assembled, with medium distribution kit for primary circuit.
Complete with:
- thermostatic set point regulating unit;
- medium distribution kit with built-in lockshields and shut-off valves for primary circuit;
- distribution manifolds in composite with built-in flow meters and shut-off valves;
- primary circuit by-pass kit;
- safety thermostat;
- high-efficiency pump.

Maximum working pressure: 6 bar
Adjustment temperature range: 25–55 °C
Electric supply: 230 V AC

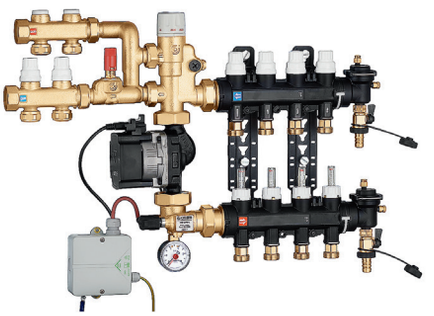

CE

Code	Main connection	Outlet connection	Radiator connection		
1826C5A2L 002	1" F	3/4" M - 3 out.	3/4" M - 2 out.	1	-
1826D5A2L 002	1" F	3/4" M - 4 out.	3/4" M - 2 out.	1	-
1826E5A2L 002	1" F	3/4" M - 5 out.	3/4" M - 2 out.	1	-
1826F5A2L 002	1" F	3/4" M - 6 out.	3/4" M - 2 out.	1	-
1826G5A2L 002	1" F	3/4" M - 7 out.	3/4" M - 2 out.	1	-
1826H5A2L 002	1" F	3/4" M - 8 out.	3/4" M - 2 out.	1	-
1826I5A2L 002	1" F	3/4" M - 9 out.	3/4" M - 2 out.	1	-
1826L5A2L 002	1" F	3/4" M - 10 out.	3/4" M - 2 out.	1	-
1826M5A2L 002	1" F	3/4" M - 11 out.	3/4" M - 2 out.	1	-
1826N5A2L 002	1" F	3/4" M - 12 out.	3/4" M - 2 out.	1	-
1826O5A2L 002	1" F	3/4" M - 13 out.	3/4" M - 2 out.	1	-

Set point thermostatic regulating units, brass

182

Set point regulating unit pre-assembled in inspection wall box.
Complete with:
- set point thermostatic regulating unit,- return manifold with built-in shut-off valves fitted for thermo-electric actuator;
- return manifold with built-in shut-off valves fitted for thermo-electric actuator;
- flow manifold complete with flow meters with 0–5 l/m scale and flow rate balancing valves;
- end fittings with automatic air vent and drain cock;
- safety thermostat;
- high-efficiency pump, UPM3 Auto L 25-70;
- inspection wall box, with floor supports.

Brass manifold body.

Maximum working pressure: 6 bar
Adjustment temperature range: 25–55 °C
Electric supply: 230 V AC

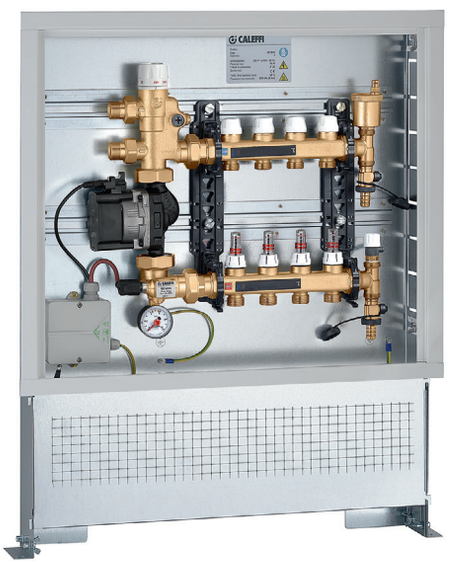

CE

Code	Connection	Outlet connection	Width (mm)		
1825C7A2L	3/4" M	3/4" M - 3 out.	600	1	-
1825D7A2L	3/4" M	3/4" M - 4 out.	600	1	-
1825E7A2L	3/4" M	3/4" M - 5 out.	600	1	-
1825F7A2L	3/4" M	3/4" M - 6 out.	800	1	-
1825G7A2L	3/4" M	3/4" M - 7 out.	800	1	-
1825H7A2L	3/4" M	3/4" M - 8 out.	800	1	-
1825I7A2L	3/4" M	3/4" M - 9 out.	800	1	-
1825L7A2L	3/4" M	3/4" M - 10 out.	1000	1	-
1825M7A2L	3/4" M	3/4" M - 11 out.	1000	1	-
1825N7A2L	3/4" M	3/4" M - 12 out.	1000	1	-
1825O7A2L	3/4" M	3/4" M - 13 out.	1000	1	-



182

Pre-assembled set point regulating unit.
Complete with:
- set point thermostatic regulating unit;
- safety thermostat;
- high-efficiency pump.

Maximum working pressure: 10 bar
Adjustment temperature range: 25–55 °C
Electric supply: 230 V AC

CE

Code	Connection		
182521A2L	3/4" M	1	-

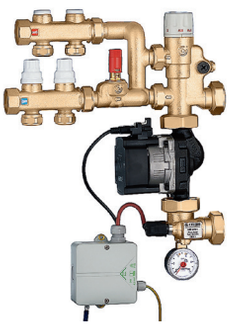

182

Set point regulating unit.
Complete with:
- set point thermostatic regulating unit;
- medium distribution kit with built-in lockshields and shut-off valves for primary circuit;
- primary circuit by-pass kit;
- safety thermostat;
- high-efficiency pump.

Maximum working pressure: 10 bar
Adjustment temperature range: 25–55 °C
Electric supply: 230 V AC

CE

Code	Connection 1	Connection 2	Outlet connection		
182621A2L 002	1" F	1 1/4" F	3/4" M - 2 out.	1	-
182621A2L 003	1" F	1 1/4" F	3/4" M - 3 out.	1	-

Coupling regulating units and manifolds

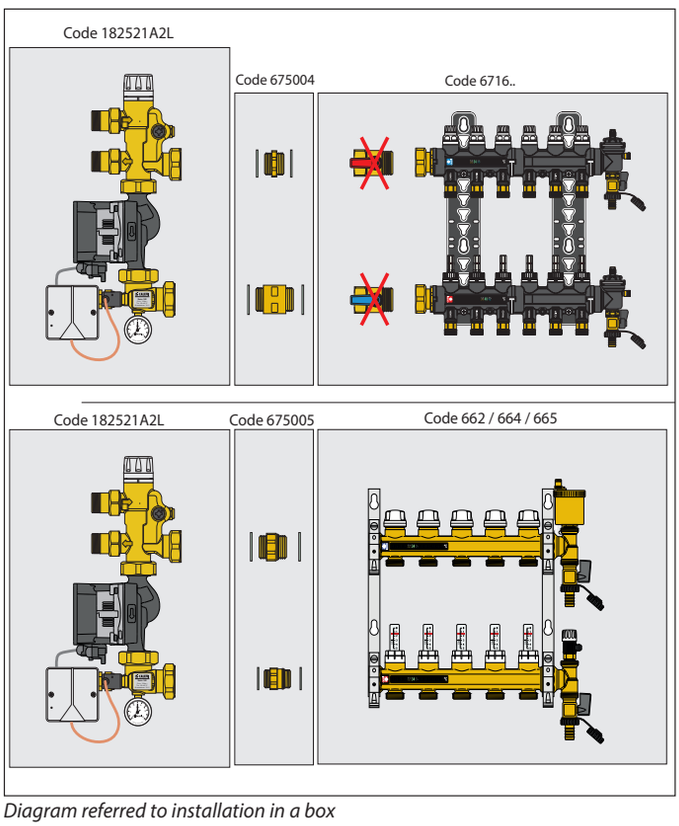

Diagram referred to installation in a box

Accessories for set point thermostatic regulating unit



661

Adjustable depth box for manifolds 662, 671 and 668.S1, 664 and 665 series and regulating units 182 series.
Complete with supports for floor installation.
Closure with a push-fit clamp.

Material: painted metal sheet

Code	Height (mm)	Width (mm)	Depth (mm)		
661045	500	400	110–150	1	-
661065	500	600	110–150	1	-
661085	500	800	110–150	1	-
661105	500	1000	110–150	1	-
661125	500	1200	110–150	1	-



182

Differential by-pass kit with fixed setting 25 kPa (2.500 mm w.g.).
Complete with flexible hose.
For 182 series regulating units and 670 and 671 series manifolds.

Maximum working pressure: 10 bar
Medium temperature range: 0–100 °C

Code	Connection		
182000	3/4" F	1	5



675

Pair of fittings with seals for connection of 182 series groups to 662 and 664 series manifolds.

Code	Connection 1	Connection 2		
675005	1 1/4" M	1" M	1	-



675

Pair of fittings with seals for connection of 182 series groups to 670 and 671 series manifolds.

Code	Connection 1	Connection 2		
675004	1 1/4" M	1" M	1	-

Thermostatic mixing valve for radiant panel systems



5202

Adjustable thermostatic mixing valve with knob.
For radiant panel systems.

Maximum working pressure: 10 bar
Medium temperature range: 2–85 °C
Material: dezincification resistant brass DR

Code	Connection	DN	Adjustment temperature (°C)	Kv (m^3/h)		
520251	3/4″ M	DN 20	20–43	1,4	1	25
520261	1″ M	DN 25	20–43	4	1	5

Application diagram

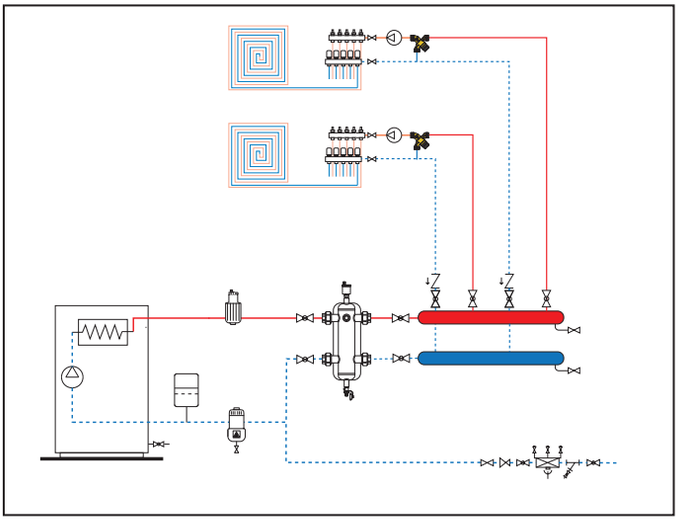



166

Thermostatic mixing valve.
For 166 series units.

Maximum working pressure: 10 bar
Medium temperature range: 5–110 °C
Kv: 4,1 m^3/h

Code	System side connection	Connection	Mixed connection	DN	Adjustment temperature (°C)		
166001	1 1/2″ M	1 1/4″ M	1 1/2″ F captive nut	DN 20	25–50	1	-
166005	1 1/2″ M	1 1/4″ M	1 1/2″ F captive nut	DN 20	40–70	1	-

Application diagram

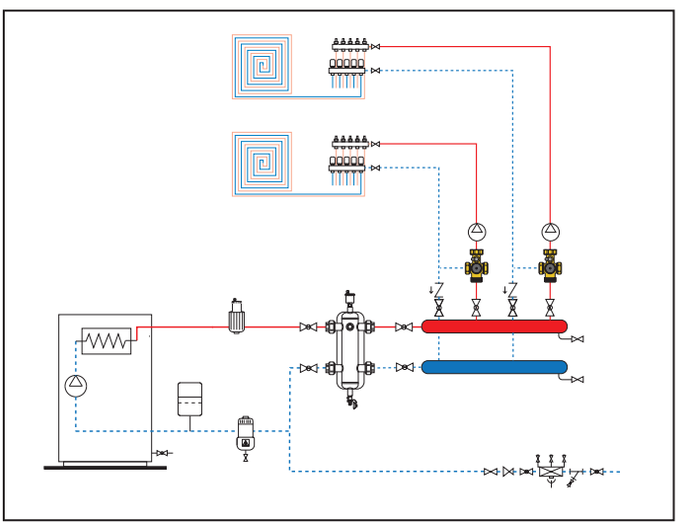

THERMO-ELECTRIC ACTUATORS AND BOXES FOR DISTRIBUTION MANIFOLD

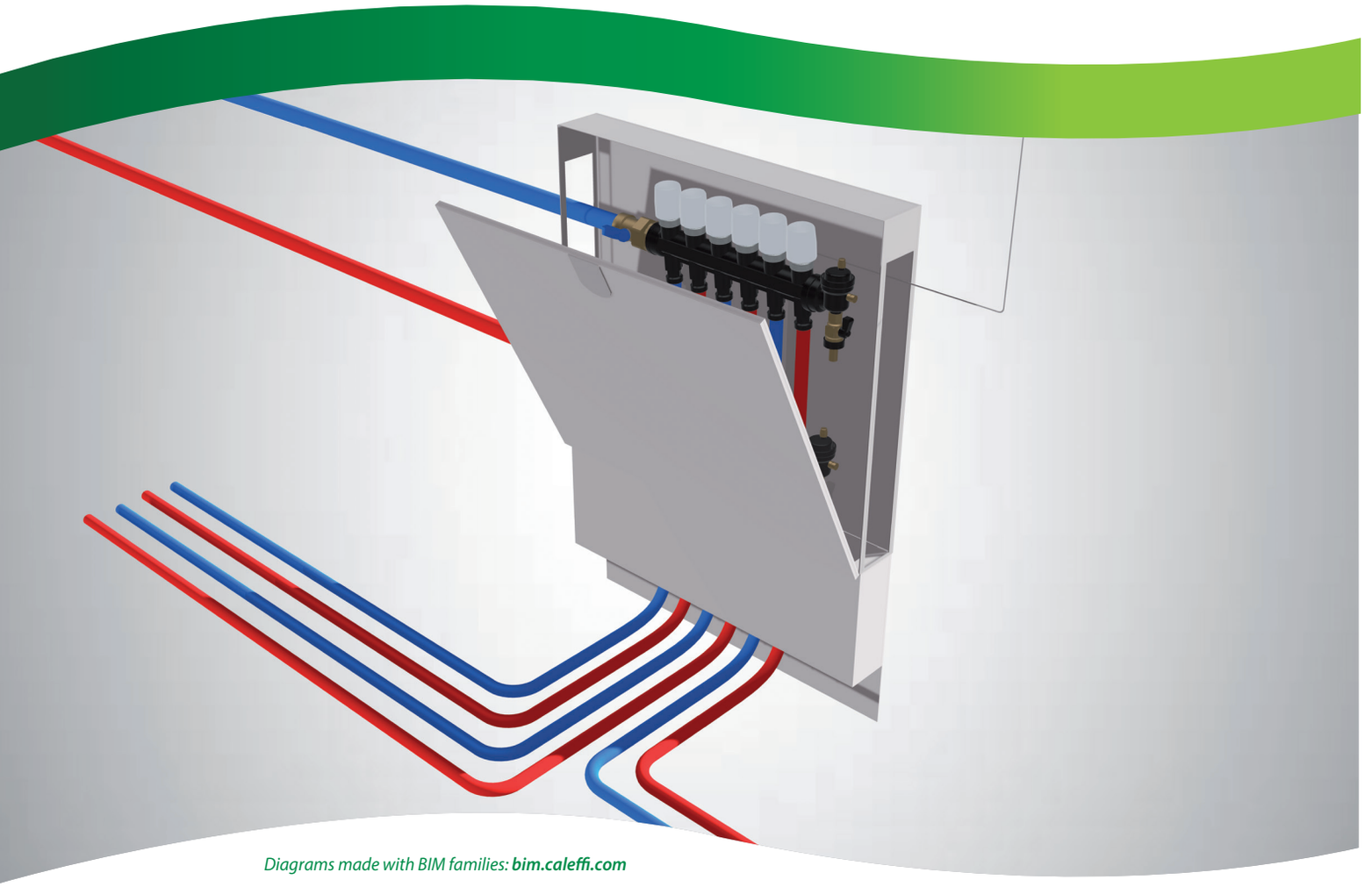

Diagrams made with BIM families: ***bim.caleffi.com***

Thermo-electric actuator - threaded connection
Thermo-electric actuator - push fit connection
Boxes for distribution manifolds from 110 to 140 mm
Boxes for distribution manifolds from 80 to 120 mm
Boxes for distribution manifolds from 110 to 150 mm

THERMO-ELECTRIC ACTUATORS

Thermo-electric actuator - threaded connection



6561

Thermo-electric actuator **with auxiliary microswitch**.
Normally closed.
For valves 338, 339, 401, 402, 425, 426, 421, 422, 455, 456, 220, 221, 222, 223, 224, 225, 226, 227, 230, 231, 232, 233, 234, 237, 676, 677, 678 series, manifolds 670, 671, 662, 663, 668.S1, 664, 665, 116 series and unit 171, 182 series.
With auxiliary microswitch.

Ambient temperature range: 0–50 °C
Protection class: IP 44 (vertical position)
Supply cable length: 0,8 m
Auxiliary microswitch contact rating (230 V): 0,8 A
Starting current: ≤ 1 A

CE

Code	Electric supply		
656112	230 V AC	1	10
656114	24 V AC/DC	1	10



6561

Thermo-electric actuator.
Normally closed.
For valves 116, 338, 339, 401, 402, 425, 426, 421, 422, 455, 456, 220, 221, 222, 223, 224, 225, 226, 227, 230, 231, 232, 233, 234, 237, 676, 677, 678 series, manifolds 670, 671, 662, 663, 668.S1, 664, 665 series and unit 171, 182 series.

Ambient temperature range: 0–50 °C
Protection class: IP 44 (vertical position)
Supply cable length: 0,8 m
Starting current: ≤ 1 A

CE

Code	Electric supply		
656102	230 V AC	1	10
656104	24 V AC/DC	1	10



6563

Thermo-electric actuator **with manual opening and position indicator**.
Normally closed.
For valves 116, 338, 339, 401, 402, 425, 426, 421, 422, 455, 456, 220, 221, 222, 223, 224, 225, 226, 227, 230, 231, 232, 233, 234, 237, 676, 677, 678 series, manifolds 670, 671, 662, 663, 668.S1, 664, 665 series and unit 171, 182 series.
With auxiliary microswitch.
PATENT

Ambient temperature range: 0–50 °C
Protection class: IP 40
Supply cable length: 0,8 m
Auxiliary microswitch contact rating (230 V): 0,8 A
Starting current: ≤ 1 A

CE

Code	Electric supply		
656312	230 V AC	1	10
656314	24 V AC/DC	1	10



6563

Thermo-electric actuator **with manual opening and position indicator**.
Normally closed.
For valves 116, 338, 339, 401, 402, 425, 426, 421, 422, 455, 456, 220, 221, 222, 223, 224, 225, 226, 227, 230, 231, 232, 233, 234, 237, 676, 677, 678 series, manifolds 670, 671, 662, 663, 668.S1, 664, 665 series and unit 171, 182 series.
PATENT

Ambient temperature range: 0–50 °C
Protection class: IP 40
Supply cable length: 0,8 m
Starting current: ≤ 1 A

CE

Code	Electric supply		
656302	230 V AC	1	10
656304	24 V AC/DC	1	10



6563

Thermo-electric actuator **with low power consumption, with auxiliary microswitch**.
With opening position indicator.

Ambient temperature range: 0–50 °C
Running power consumption: 3 W
Protection class: IP 40
Supply cable length: 0,8 m
Starting current: ≤ 250 mA

CE

Code	Notes	Electric supply		
656354	-	24 V AC/DC	1	10
656344	without auxiliary microswitch	24 V AC/DC	1	10

Thermo-electric actuator - push fit connection



6562

Thermo-electric actuator.
With opening position indicator.
Normally closed.
Quick coupling installation, with a clip adapter.
For valves 116, 338, 339, 401, 402, 425, 426, 421, 422, 455, 456, 220, 221, 222, 223, 224, 225, 226, 227, 230, 231, 232, 233, 234, 237, 676, 677, 678 series, manifolds 670, 671, 662, 663, 668.S1, 664, 665 series and unit 171, 182 series.

Ambient temperature range: 0–50 °C
Protection class: IP 54
Supply cable length: 0,8 m
Starting current: ≤ 1 A

CE

Code	Electric supply		
656202	230 V AC	1	10
656204	24 V AC/DC	1	10



6562

Thermo-electric actuator **with opening position indicator**.
Normally closed.
Quick coupling installation, with a clip adapter.
For valves 116, 338, 339, 401, 402, 425, 426, 421, 422, 455, 456, 220, 221, 222, 223, 224, 225, 226, 227, 230, 231, 232, 233, 234, 237, 676, 677, 678 series, manifolds 670, 671, 662, 663, 668.S1, 664, 665 series and unit 171, 182 series.
With auxiliary microswitch.

Ambient temperature range: 0–50 °C
Protection class: IP 54
Supply cable length: 0,8 m
Auxiliary microswitch contact rating (230 V): 0,8 A
Starting current: ≤ 1 A

CE

Code	Electric supply		
656212	230 V AC	1	10
656214	24 V AC/DC	1	10



6564

Thermo-electric actuator **with low power consumption**.
With opening position indicator.
Normally closed.
Quick coupling installation, with a clip adapter.

Ambient temperature range: 0–50 °C
Protection class: IP 54
Supply cable length: 0,8 m
Starting current: ≤ 250 mA

CE

Code	Electric supply		
656402	230 V AC	1	10
656404	24 V AC/DC	1	10



6564

Thermo-electric actuator **with low power consumption, with auxiliary microswitch**.
With opening position indicator.
Normally closed.
Quick coupling installation, with a clip adapter.
With auxiliary microswitch.

Ambient temperature range: 0–50 °C
Protection class: IP 54
Supply cable length: 0,8 m
Auxiliary microswitch contact rating (230 V): 0,8 A
Starting current: ≤ 250 (230 V) mA

CE

Code	Electric supply		
656412	230 V AC	1	10
656414	24 V AC/DC	1	10

Control bar



6205

Control bar.
Timer switch input.
Pump outlet control.
SUMMER - WINTER switch input.

Electric supply: 230 V AC
Running power consumption: 5,5 VA
Protection class: IP 30 (with rubber cable gland)
Contact rating on switch-over: 10 A

CE

Code	Notes		
620542	4 channels	1	8
620582	8 channels	1	8

INSPECTION WALL BOXES AND WALL PORTS

Boxes for distribution manifolds from 110 to 140 mm



659

Inspection wall box with adjustable depth (110-140 mm).

Material: painted metal sheet

Code	Height (mm)	Width (mm)	Depth (mm)		
659044	500	400	110–140	1	-
659064	500	600	110–140	1	-
659084	500	800	110–140	1	-
659104	500	1000	110–140	1	-
659124	500	1200	110–140	1	-



659

Inspection wall port with frame.

Material: painted metal sheet

Code	Article use		
659304	659044	1	-
659306	659064	1	-
659308	659084	1	-
659310	659104	1	-
659312	659124	1	-

Boxes for distribution manifolds from 80 to 120 mm



659

Inspection wall box with adjustable depth (80-120 mm).
Complete with specific support for manifold brackets.
Closure with a push-fit clamp.
For distribution manifolds 349, 350, 592, 662, 671, 664 and 665 series.

Material: painted metal sheet

Code	Height (mm)	Width (mm)	Depth (mm)		
659045	500	400	80–120	1	-
659065	500	600	80–120	1	-
659085	500	800	80–120	1	-
659105	500	1000	80–120	1	-



659

Inspection wall port with frame.

Material: painted metal sheet

Code	Article use		
659504	659045	1	-
659506	659065	1	-
659508	659085	1	-
659510	659105	1	-

Boxes for distribution manifolds from 110 to 150 mm



661

Adjustable depth box for manifolds 662, 671 and 668.S1, 664 and 665 series and regulating units 182 series.
Complete with supports for floor installation.
Closure with a push-fit clamp.

Material: painted metal sheet

Code	Height (mm)	Width (mm)	Depth (mm)		
661045	500	400	110–150	1	-
661065	500	600	110–150	1	-
661085	500	800	110–150	1	-
661105	500	1000	110–150	1	-
661125	500	1200	110–150	1	-

COMPONENTS FOR DOMESTIC WATER SYSTEM



Diagrams made with BIM families: ***bim.caleffi.com***

Pressure reducing valves
Thermostatic mixing valves
Electronic mixing valves
Thermostatic regulator for domestic hot water recirculation circuits
Manifolds for domestic water systems
Safety groups for domestic water systems
Safety relief valves for domestic water systems
Control devices for domestic water systems
Check valves

COMPONENTS FOR DOMESTIC WATER SYSTEMS

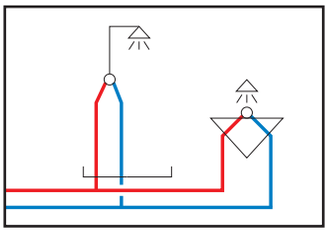

Modern domestic cold and hot water distribution systems need special protective and control devices, which are chosen according to the intended use and security level to be guaranteed for the utilities. Depending on the application type, for example home, commercial or public use, different rules are used to dimension systems, and they are fitted with different equipment. Below we describe the most important device classifications to help make the right choice.

Pressure adjustment

- Pressure reducing valves

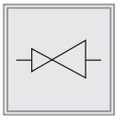
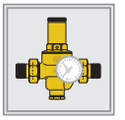

Temperature adjustment

- Thermostatic and electronic mixing valves

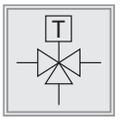
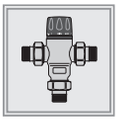

Flow rate adjustment

- Thermostatic regulator for recirculation circuits

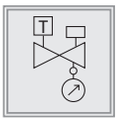


Cold and hot water distribution

- Distribution manifolds

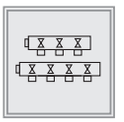
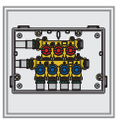

Safety and protection of hot water storage

- Anti-scale device - Safety groups - Safety valves - Expansion vessels

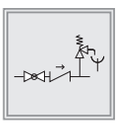
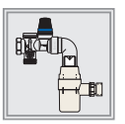

Water hammer phenomenon

- Water hammer arrester

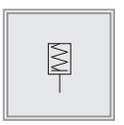
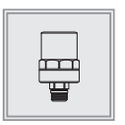

Antifreeze protection

- Shut-off cock with antifreeze safety device

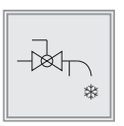
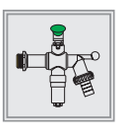

Shut off medium

- Ball valves with built-in check valve

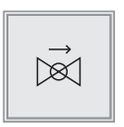


PRESSURE REDUCING VALVES

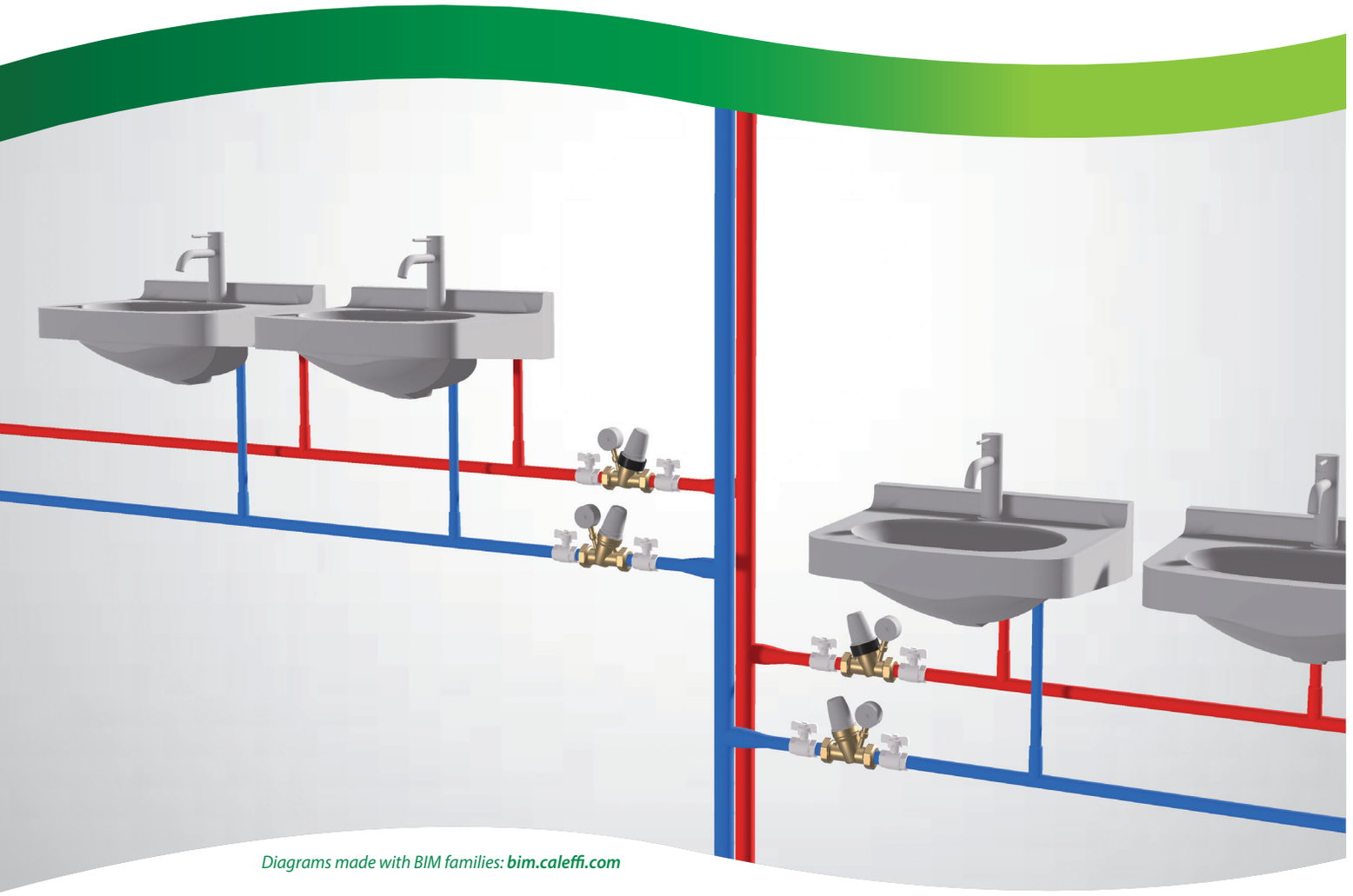

Diagrams made with BIM families: ***bim.caleffi.com***

Micro pressure reducing valves
Compact pressure reducing valves
Compact pressure reducing valves for high temperature
Pre-adjustable pressure reducing valves
Pre-adjustable pressure reducing valves for high temperature
Standard pressure reducing valves for high temperature
Spare parts for pressure reducing valves
Pressure reducing valves for first stage control
Pressure reducing valves for high-rise building
Pressure reducing and stabilising valves
Combined group for pressure control
Combined group for pressure and temperature control
Accessories for combined group for pressure control

Domestic Water Sizer
DOMESTIC WATER SYSTEM SIZER ALSO FOR SMARTPHONE
Available on www.caleffi.com and app for smartphone.
Download the version for your iOS and Android® mobile phone.

PRESSURE REDUCING VALVES

Micro pressure reducing valves



Pb LOW LEAD

533...H

Inclined micro pressure reducing valve **for special applications: for dispensing water, beverages and coffee machines**.
Replaceable cartridge and strainer.
Certified to EN 1567.
PATENT PENDING

Maximum upstream pressure: 16 bar
Adjustment pressure range: 0,8–4 bar
Maximum recommended flow rate: 6 l/min
Medium temperature range: 2–80 °C
Material: dezincification resistant brass DR "low lead"

Code	Notes		
533230H	with pressure gauge 0–10 bar	1	20
533430H	-	1	20



Pressure gauge for 533H series inclined micro pressure reducing valves for special applications

and 539H combined group.

Code	Connection		
F0002665	1/4" M radial connection	1	-

Compact pressure reducing valves



5330

Inclined pressure reducing valve.
Replaceable cartridge and strainer.

Maximum upstream pressure: 16 bar
Adjustment pressure range: 1–6 bar
Medium temperature range: 2–40 °C
Material: brass
Finish: nickel plated

Code	Connection		
533041	1/2" F	1	20
533051	3/4" F	1	20



5331

Inclined pressure reducing valve for safety group.
Replaceable cartridge and strainer.

Maximum upstream pressure: 16 bar
Adjustment pressure range: 1–6 bar
Medium temperature range: 2–40 °C
Material: brass
Finish: nickel plated

Code	Connection 1	Connection 2		
533151	3/4" M	3/4" F captive nut	1	25



5332

Inclined pressure reducing valve, with 0–10 bar pressure gauge.
Replaceable cartridge and strainer.

Maximum upstream pressure: 16 bar
Adjustment pressure range: 1–6 bar
Medium temperature range: 2–40 °C
Material: brass
Finish: nickel plated

Code	Connection		
533241	1/2" F	1	20
533251	3/4" F	1	20



5334

Inclined pressure reducing valve, with pressure gauge connection.
Replaceable cartridge and strainer.
With 1/4″ F pressure gauge connection.

Maximum upstream pressure: 16 bar
Adjustment pressure range: 1–6 bar
Medium temperature range: 2–40 °C
Material: brass
Finish: nickel plated

Code	Connection		
533441	1/2″F	1	20
533451	3/4″F	1	20
533461	1″F	1	25



5338

Inclined pressure reducing valve with compression ends.
Replaceable cartridge and strainer.
With pressure gauge: 0–10 bar.

Maximum upstream pressure: 16 bar
Medium temperature range: 2–40 °C
Adjustment pressure range: 1–6 bar
Material: dezincification resistant brass DR
Finish: nickel plated

Code	Connection		
533841	Ø 15	1	20
533851	Ø 22	1	20



5336

Inclined pressure reducing valve with compression ends.
Replaceable cartridge and strainer.

Maximum upstream pressure: 16 bar
Medium temperature range: 2–40 °C
Adjustment pressure range: 1–6 bar
Material: dezincification resistant brass DR
Finish: nickel plated

Code	Connection		
533641	Ø 15	1	25
533651	Ø 22	1	25



5339

Inclined pressure reducing valve with compression ends and built-in safety relief valve.
Replaceable cartridge and strainer.
Pressure reducing valve.
Safety relief valve.
With stainless steel seat.

Maximum upstream pressure: 1600 kPa
Medium temperature range: 2–40 °C
Adjustment pressure range: 100–600 kPa
Material: dezincification resistant brass DR

Code	Connection		
533944	Ø 15	1	25
533954	Ø 22	1	25



5337

Inclined pressure reducing valve with compression ends.
Replaceable cartridge and strainer.
With 1/4″ F pressure gauge connection.

Maximum upstream pressure: 16 bar
Medium temperature range: 2–40 °C
Adjustment pressure range: 1–6 bar
Material: dezincification resistant brass DR
Finish: nickel plated

Code	Connection		
533741	Ø 15	1	20
533751	Ø 22	1	20

Compact pressure reducing valves for high temperature



5330..H

Inclined pressure reducing valve.
Replaceable cartridge and strainer.
For high temperature.
Certified to EN 1567.

Maximum upstream pressure: 16 bar
Medium temperature range: 2–80 °C
Adjustment pressure range: 1–5,5 bar
Material: brass
Finish: nickel plated

Code	Connection		
533041H	1/2″ F	1	20
533051H	3/4″ F	1	20



5331..H

Inclined pressure reducing valve for safety group.
Replaceable cartridge and strainer.
For high temperature.
Certified to EN 1567.

Maximum upstream pressure: 16 bar
Medium temperature range: 2–80 °C
Adjustment pressure range: 1–5,5 bar
Material: dezincification resistant brass DR

Code	Inlet connection	Outlet connection		
533159H	Ø 22	3/4″ F captive nut	1	30



5332..H

Inclined pressure reducing valve.
Replaceable cartridge and strainer.
For high temperature.
With pressure gauge: 0–10 bar.
Certified to EN 1567.

Maximum upstream pressure: 16 bar
Medium temperature range: 2–80 °C
Adjustment pressure range: 1–5,5 bar
Material: brass
Finish: nickel plated

Code	Connection		
533241H	1/2″ F	1	20
533251H	3/4″ F	1	20



5334..H

Inclined pressure reducing valve.
Replaceable cartridge and strainer.
For high temperature.
With 1/4″ F pressure gauge connection.
Certified to EN 1567.

Maximum upstream pressure: 16 bar
Medium temperature range: 2–80 °C
Adjustment pressure range: 1–5,5 bar
Material: brass
Finish: nickel plated

Code	Connection		
533441H	1/2″ F	1	20
533451H	3/4″ F	1	20
533461H	1″ F	1	25



5332..H

Inclined pressure reducing valve.
Replaceable cartridge and strainer.
For high temperature.
With pressure gauge: 0–10 bar.
Certified to EN 1567.

Maximum upstream pressure: 16 bar
Medium temperature range: 2–80 °C
Adjustment pressure range: 1–5,5 bar
Material: dezincification resistant brass DR
Finish: nickel plated

Code	Connection		
533241H LTC	1/2″ F	1	20
533251H LTC	3/4″ F	1	20



5334..H

Inclined pressure reducing valve.
Replaceable cartridge and strainer.
For high temperature.
With 1/4″ F pressure gauge connection.
Certified to EN 1567.

Maximum upstream pressure: 16 bar
Medium temperature range: 2–80 °C
Adjustment pressure range: 1–5,5 bar
Material: dezincification resistant brass DR
Finish: nickel plated

Code	Connection	DN		
533441H LTC	1/2″ F	DN 15	1	20
533451H LTC	3/4″ F	DN 20	1	20
533461H LTC	1″ F	DN 20	1	25



5334..H

NEW

Inclined pressure reducing valve.
Replaceable cartridge and strainer.
For high temperature.
With 1/4" F pressure gauge connection.
Certified to EN 1567.

Maximum upstream pressure: 16 bar
Medium temperature range: 2–80 °C
Adjustment pressure range: 1–5,5 bar
Material: dezincification resistant brass DR
Finish: yellow brass

WRAS APPROVED PRODUCT CERTIFICATION MARK

Code	Connection	DN		
533460H LTC	Rp 1" F	DN 25	1	10



5337..H

Inclined pressure reducing valve with compression ends.
Replaceable cartridge and strainer.
For high temperature.
With 1/4" F pressure gauge connection.
Certified to EN 1567.

Maximum upstream pressure: 16 bar
Medium temperature range: 2–80 °C
Adjustment pressure range: 1–5,5 bar
Material: dezincification resistant brass DR

DVGW CERT DIN EN 1567
WRAS APPROVED PRODUCT CERTIFICATION MARK

Code	Connection	DN	Finish		
533741H	Ø 15	DN 15	nickel plated	1	20
533751H	Ø 22	DN 20	nickel plated	1	20
533761H	Ø 28	DN 20	nickel plated	1	20
533760H	Ø 28	DN 25	yellow brass	1	20



5338..H

Inclined pressure reducing valve with compression ends.
Replaceable cartridge and strainer.
For high temperature.
With pressure gauge: 0–10 bar.
Certified to EN 1567.

Maximum upstream pressure: 16 bar
Medium temperature range: 2–80 °C
Adjustment pressure range: 1–5,5 bar
Material: dezincification resistant brass DR
Finish: nickel plated

DVGW CERT DIN EN 1567
WRAS APPROVED PRODUCT CERTIFICATION MARK

Code	Connection		
533841H	Ø 15	1	20
533851H	Ø 22	1	20
533861H	Ø 28	1	20



5336..H

Inclined pressure reducing valve with compression ends.
Replaceable cartridge and strainer.
For high temperature.
Certified to EN 1567.

Maximum upstream pressure: 16 bar
Medium temperature range: 2–80 °C
Adjustment pressure range: 1–5,5 bar
Material: dezincification resistant brass DR
Finish: nickel plated

DVGW CERT DIN EN 1567
WRAS APPROVED PRODUCT CERTIFICATION MARK

Code	Connection		
533641H	Ø 15	1	25
533651H	Ø 22	1	25



Pb LOW LEAD

5335..H

Inclined pressure reducing valve.
Replaceable cartridge and strainer.
With 1/4" F pressure gauge connection.

Maximum upstream pressure: 2000 kPa
Medium temperature range: 2–80 °C
Adjustment pressure range: 1–6 bar
Material: dezincification resistant brass DR
"low lead"

Lead Free AS 1357.2 WMKA02467

Code	Connection		
533545H AUS	Rp 1/2" F	1	25
533555H AUS	Rp 3/4" F	1	25
533565H AUS	Rp 1" F	1	10



Pb LOW LEAD

5335..H

Three-way inclined pressure reducing valve.
Replaceable cartridge and strainer.
Replaceable connectors, with plug.

Maximum upstream pressure: 2000 kPa
Medium temperature range: 2–80 °C
Adjustment pressure range: 1–6 bar
Material: dezincification resistant brass DR
"low lead"

Lead Free AS 1357.2 WMKA02467

Code	Connection		
533550H AUS	Rp 3/4" F	1	30

Pre-adjustable pressure reducing valves



5350

Pressure reducing valve with self-contained replaceable cartridge.
Male union connections.
With pressure regulating scale for manual pressure adjustment.
Certified to EN 1567.
PATENT

Maximum upstream pressure: 25 bar
Adjustment pressure range: 1–6 bar
Medium temperature range: 2–40 °C
Material: dezincification resistant brass DR

Code	Connection	Notes		
535040	1/2″ M	with 1/4″ F pressure gauge connection	1	5
535050	3/4″ M	with 1/4″ F pressure gauge connection	1	5
535060	1″ M	with 1/4″ F pressure gauge connection	1	5
535074	1 1/4″ M	with 1/4″ F pressure gauge connection	1	5
535070	1 1/4″ M	with 1/4″ F pressure gauge connection	1	4
535080	1 1/2″ M	with 1/4″ F pressure gauge connection	1	4
535090	2″ M	with 1/4″ F pressure gauge connection	1	4
535041	1/2″ M	with pressure gauge 0–10 bar	1	5
535051	3/4″ M	with pressure gauge 0–10 bar	1	5
535061	1″ M	with pressure gauge 0–10 bar	1	5
535075	1 1/4″ M	with pressure gauge 0–10 bar	1	5
535071	1 1/4″ M	with pressure gauge 0–10 bar	1	4
535081	1 1/2″ M	with pressure gauge 0–10 bar	1	4
535091	2″ M	with pressure gauge 0–10 bar	1	4

535074, 535075 (1 1/4″ M) complete with 1″ cartridge. Not DVGW certified.



5351

Pressure reducing valve with self-contained replaceable cartridge.
Male union connections.
With pressure regulating scale for manual pressure adjustment.
Stainless steel strainer cartridge with transparent container.
Complete with spare strainer and key for removing the strainer and cartridge.
Certified to EN 1567.

Maximum upstream pressure: 25 bar
Adjustment pressure range: 1–6 bar
Medium temperature range: 2–40 °C
Strainer mesh size Ø: 0,28 mm
Material: brass

Code	Connection	Notes		
535140	1/2″ M	with 1/4″ F pressure gauge connection	1	5
535150	3/4″ M	with 1/4″ F pressure gauge connection	1	5
535160	1″ M	with 1/4″ F pressure gauge connection	1	5
535141	1/2″ M	with stainless steel pressure gauge 0–10 bar	1	5
535151	3/4″ M	with stainless steel pressure gauge 0–10 bar	1	5
535161	1″ M	with stainless steel pressure gauge 0–10 bar	1	5



5350

Pressure reducing valve with self-contained replaceable cartridge.
With pressure regulating scale for manual pressure adjustment.

Maximum upstream pressure: 25 bar
Medium temperature range: 2–40 °C
Adjustment pressure range: 1–6 bar
Material: dezincification resistant brass DR

Code	Connection	Notes		
535022	Ø 22	with 1/4″ F pressure gauge connection	1	10

Pre-adjustable pressure reducing valves for high temperature



5350..H

Pressure reducing valve with self-contained replaceable cartridge.
Male union connections.
With pressure regulating scale for manual pressure adjustment.
Certified to EN 1567.

Maximum upstream pressure: 25 bar
Medium temperature range: 2–80 °C
Adjustment pressure range: 1–6 bar
Material: dezincification resistant brass DR "low lead"

Code	Connection	Notes		
535040H	1/2″ M	with 1/4″ F pressure gauge connection	1	5
535050H	3/4″ M	with 1/4″ F pressure gauge connection	1	5
535060H	1″ M	with 1/4″ F pressure gauge connection	1	5
535070H	1 1/4″ M	with 1/4″ F pressure gauge connection	1	4
535080H	1 1/2″ M	with 1/4″ F pressure gauge connection	1	4
535090H	2″ M	with 1/4″ F pressure gauge connection	1	4
535041H	1/2″ M	with pressure gauge, 0–10 bar	1	5
535051H	3/4″ M	with pressure gauge, 0–10 bar	1	5
535061H	1″ M	with pressure gauge, 0–10 bar	1	5
535071H	1 1/4″ M	with pressure gauge, 0–10 bar	1	4
535081H	1 1/2″ M	with pressure gauge, 0–10 bar	1	4
535091H	2″ M	with pressure gauge, 0–10 bar	1	4



5350..H

Pressure reducing valve with self-contained replaceable cartridge.
For high temperature.
With pressure regulating scale for manual pressure adjustment.
With 1/4″ F pressure gauge connection.
Certified to EN 1567.

Maximum upstream pressure: 16 bar
Medium temperature range: 2–80 °C
Adjustment pressure range: 1–6 bar
Material: dezincification resistant brass DR "low lead"

Code	Connection		
535015H	Ø 15	1	5
535022H	Ø 22	1	5
535028H	Ø 28	1	5



5350..H

Pressure reducing valve with self-contained replaceable cartridge.
For high temperature.
Male union connections.
With pressure regulating scale for manual pressure adjustment.
With 1/4″ F pressure gauge connection.

Maximum upstream pressure: 2000 kPa
Medium temperature range: 2–80 °C
Adjustment pressure range: 1–6 bar
Material: dezincification resistant brass DR "low lead"

Lead Free
AS 1357.2
WM - 040162

Code	Connection		
535040H AUS	1/2″ M	1	5
535050H AUS	3/4″ M	1	5
535060H AUS	1″ M	1	5
535070H AUS	1 1/4″ M	1	4
535080H AUS	1 1/2″ M	1	4
535090H AUS	2″ M	1	4

Standard pressure reducing valves for high temperature



5360

Pressure reducing valve with replaceable cartridge and male union connections.
Performance according to EN 1567.

Maximum upstream pressure: 25 bar
Adjustment pressure range: 0,5–6 bar
Medium temperature range: 2–80 °C
Material: dezincification resistant brass DR

Code	Connection	Notes		
536040	1/2″ M	with 1/4″ F pressure gauge connection	1	5
536050	3/4″ M	with 1/4″ F pressure gauge connection	1	5
536060	1″ M	with 1/4″ F pressure gauge connection	1	5
536070	1 1/4″ M	with 1/4″ F pressure gauge connection	1	4
536080	1 1/2″ M	with 1/4″ F pressure gauge connection	1	4
536041	1/2″ M	with pressure gauge 0–10 bar	1	5
536051	3/4″ M	with pressure gauge 0–10 bar	1	5
536061	1″ M	with pressure gauge 0–10 bar	1	5
536071	1 1/4″ M	with pressure gauge 0–10 bar	1	4
536081	1 1/2″ M	with pressure gauge 0–10 bar	1	4



5362

Pressure reducing valve with replaceable cartridge.

Maximum upstream pressure: 25 bar
Adjustment pressure range: 0,5–6 bar
Medium temperature range: 2–80 °C
Material: dezincification resistant brass DR

WRAS APPROVED PRODUCT CERTIFICATION MARK

Code	Connection	Notes		
536240	1/2″ F	with 1/4″ F pressure gauge connection	1	5
536250	3/4″ F	with 1/4″ F pressure gauge connection	1	5
536260	1″ F	with 1/4″ F pressure gauge connection	1	5
536241	1/2″ F	with pressure gauge 0–10 bar	1	5
536251	3/4″ F	with pressure gauge 0–10 bar	1	5
536261	1″ F	with pressure gauge 0–10 bar	1	5



5365

Pressure reducing valve with replaceable cartridge and male union connections.
With stainless steel double pressure gauge in glycerine bath:
- 0–25 bar upstream;
- 0–10 bar downstream.
Performance according to EN 1567.

Maximum upstream pressure: 25 bar
Adjustment pressure range: 0,5–6 bar
Medium temperature range: 2–80 °C
Material: bronze

WRAS APPROVED PRODUCT CERTIFICATION MARK

Code	Connection	Notes		
536580	1 1/2″ M	with 1/4″ F double pressure gauge connection	1	-
536590	2″ M	with 1/4″ F double pressure gauge connection	1	-
536581	1 1/2″ M	with double pressure gauge in glycerine bath	1	-
536591	2″ M	with double pressure gauge in glycerine bath	1	-



5366

Pressure reducing valve with replaceable cartridge and flanged connections, PN 16.
To be coupled with flat counterflanges EN 1092-1.
With stainless steel double pressure gauge in glycerine bath:
- 0–25 bar upstream;
- 0–10 bar downstream.

Maximum upstream pressure: 16 bar
Adjustment pressure range: 0,5–6 bar
Medium temperature range: 2–80 °C
Material: bronze

WRAS APPROVED PRODUCT CERTIFICATION MARK

Code	Connection		
536660	DN 65 - PN 16	1	-



539

Pressure reducing valve.
Complete with two 3/4″ x 1/2″ fittings.
With double 1/4″ F pressure gauge connection.
Certified to EN 1567.

Maximum upstream pressure: 25 bar
Adjustment pressure range: 1–5,5 bar
Medium temperature range: 2–80 °C
Material: dezincification resistant brass DR

ATTESTATION DE CONFORMITE SANITAIRE ACS NF

Code	Connection		
539250	3/4″ M	1	5



537

Soldering union connections.

Code	Inlet connection	Outlet connection		
537015	3/4″ F	Ø 15	1	-
537022	1″ F	Ø 22	1	50
537028	1 1/4″ F	Ø 28	1	50
537035	1 1/2″ F	Ø 35	1	50

Spare parts for pressure reducing valves



5330

Spare cartridge.
For reducers 5330, 5331, 5332 and 5334 series.

Code		
533000	1	100



5330..H

Spare cartridge.

Code	Notes		
533000H	DN 15 - DN 20	1	100
533013H	DN 25	1	



5350

Spare cartridge.
For 5350 and 5351 series reducing valves.

Code	Notes		
535004	1/2″ - 3/4″	1	8
535006	1″	1	8
535017	1 1/4″ (535074 - 535075)	1	8
535007	1 1/4″ - 1 1/2″ - 2″	1	-



5350..H

Spare cartridge.
For 5350H reducers.

Code	Notes		
535006H	1/2″ - 3/4″ - 1″	1	8
535009H	1 1/4″ - 1 1/2″ - 2″	1	-



Key to service strainer and cartridge.
For pressure reducing valves 5350 and 5351 series.

Code	Notes		
R52484	for 1/2″, 3/4″, 1″	1	-



5360

Spare cartridge for pressure reducing valves 5360, 5362, 5365 and 5366 series.

Code	Notes		
536004	1/2″	1	-
536005	3/4″ - 1″	1	-
536027	1 1/4″ - 1 1/2″ (5360)	1	-
536008	1 1/2″ (5365) - 2″ - DN 65	1	-

Pressure reducing valves for first stage control



Pb LOW LEAD

5360

Pressure reducing valve **for first stage control**, with replaceable cartridge.
Piston operation.
Male union connections.
With pressure gauge: 0–2500 kPa.

Maximum upstream pressure: 2500 kPa
Medium temperature range: 2–80 °C
Adjustment pressure range: 600–1000 kPa
Material: dezincification resistant brass DR "low lead"

Lead Free AS 1357.2 WM - 040299
WRAS APPROVED PRODUCT CERTIFICATION MARK

Code	Connection		
536043 AUS	1/2" M	1	5
536053 AUS	3/4" M	1	5
536063 AUS	1" M	1	5
536073 AUS	1 1/4" M	1	4
536083 AUS	1 1/2" M	1	4

Pressure reducing valves for high-rise building



Pb LOW LEAD

5335..HS

Inclined pressure reducing valve.
Replaceable cartridge and strainer.
For applications with higher pressure reduction ratio in hot and cold water distribution system.

Maximum upstream pressure: 2000 kPa
Medium temperature range: 2–80 °C
Adjustment pressure range: 1–6 bar
Material: dezincification resistant brass DR "low lead"

Lead Free AS 1357.2 WMKA02467

Code	Connection		
533545HS AUS	Rp 1/2" F	1	25
533555HS AUS	Rp 3/4" F	1	25

Pressure reducing and stabilising valves



ATTESTATION DE CONFORMITÉ SANITAIRE ACS

576

Pressure reducing valve.
To be coupled with flat counterflanges EN 1092-1.
Complete with two pressure gauges.

Adjustment pressure range: 2–14 bar
Medium temperature range: 1–60 °C
Material: cast iron

Code	Connection	Maximum upstream pressure (bar)		
576062	DN 65 - PN 16	16	1	-
576082	DN 80 - PN 16	16	1	-
576102	DN 100 - PN 16	16	1	-
576122	DN 125 - PN 16	16	1	-
576152	DN 150 - PN 16	16	1	-
576053	DN 50 - PN 25	25	1	-
576063	DN 65 - PN 25	25	1	-
576083	DN 80 - PN 25	25	1	-
576103	DN 100 - PN 25	25	1	-
576123	DN 125 - PN 25	25	1	-
576153	DN 150 - PN 25	25	1	-
576054	DN 50 - PN 40	40	1	-
576064	DN 65 - PN 40	40	1	-
576084	DN 80 - PN 40	40	1	-
576104	DN 100 - PN 40	40	1	-
576124	DN 125 - PN 40	40	1	-
576154	DN 150 - PN 40	40	1	-



ATTESTATION DE CONFORMITÉ SANITAIRE ACS
WRAS APPROVED PRODUCT CERTIFICATION MARK

578

Pilot operated pressure reducing valve.
Coupling with counterflange EN 1092-1.
Complete with two pressure gauges.

Maximum upstream pressure: 16 bar
Adjustment pressure range: 2–14 bar
Medium temperature range: 1–65 °C
Material: cast iron

Code	Connection		
578062	DN 65 - PN 16	1	-
578082	DN 80 - PN 16	1	-
578102	DN 100 - PN 16	1	-
578122	DN 125 - PN 16	1	-
578152	DN 150 - PN 16	1	-
578202	DN 200 - PN 10	1	-
578252	DN 250 - PN 10	1	-
578302	DN 300 - PN 10	1	-

Combined group for pressure control



539...H

Combined group for pressure control in domestic water systems.
Replaceable cartridge.
For high temperature.
Shut-off valve with extended lever.
EA type check valve.
With G 1/4" upstream and downstream pressure test ports.
Pressure reducing valve certified to EN 1567.
Check valve certified to EN 13959.

PATENT PENDING

Maximum upstream pressure: 16 bar
Adjustment pressure range: 1–5,5 bar
Medium temperature range: 2–80 °C
Material: dezincification resistant brass DR "low lead"

Code	Inlet connection	Outlet connection		
539050H	Rp 3/4" F	1" F captive nut	1	5

Combined group for pressure and temperature control



539...H

Combined group for pressure and temperature control in domestic water systems.
Complete with:
- 539H series combined unit, cold water circuit;
- 539H series combined unit, hot water circuit;
- adjustable thermostatic mixing valve with advanced thermal performance and anti-scald function;
- connection tee complete with check valve;
- pressure gauges (optional).

Thermostatic mixing valve certified to EN 1111 and EN 1287.

Maximum working pressure: 10 bar
Medium temperature range: 2–80 °C
Material: dezincification resistant brass DR "low lead"

Code	Inlet connection	Outlet connection	Adjustment temperature (°C)	Kv (m^3/h)		
539500H	Rp 3/4" F	3/4" M	35–65	1,7	1	-

Accessories for combined group for pressure control



557

Pressure gauge.

Accuracy class: Pressure gauge UNI 2,5
Pressure gauge scale: 0–10 bar

Code	Connection		
557010	1/4" M central back conn.	1	20



Pressure gauge for 533H series inclined micro pressure reducing valves for special applications

and 539H combined group.

Code	Connection		
F0002665	1/4" M radial connection	1	-



539...H

Spare catridge for combined group for pressure control.

Code			
539005H		1	5



539...H

Shell insulation for combined multi-function unit for 539H series pressure control.

Code			
CBN539050		1	10

THERMOSTATIC MIXING VALVES

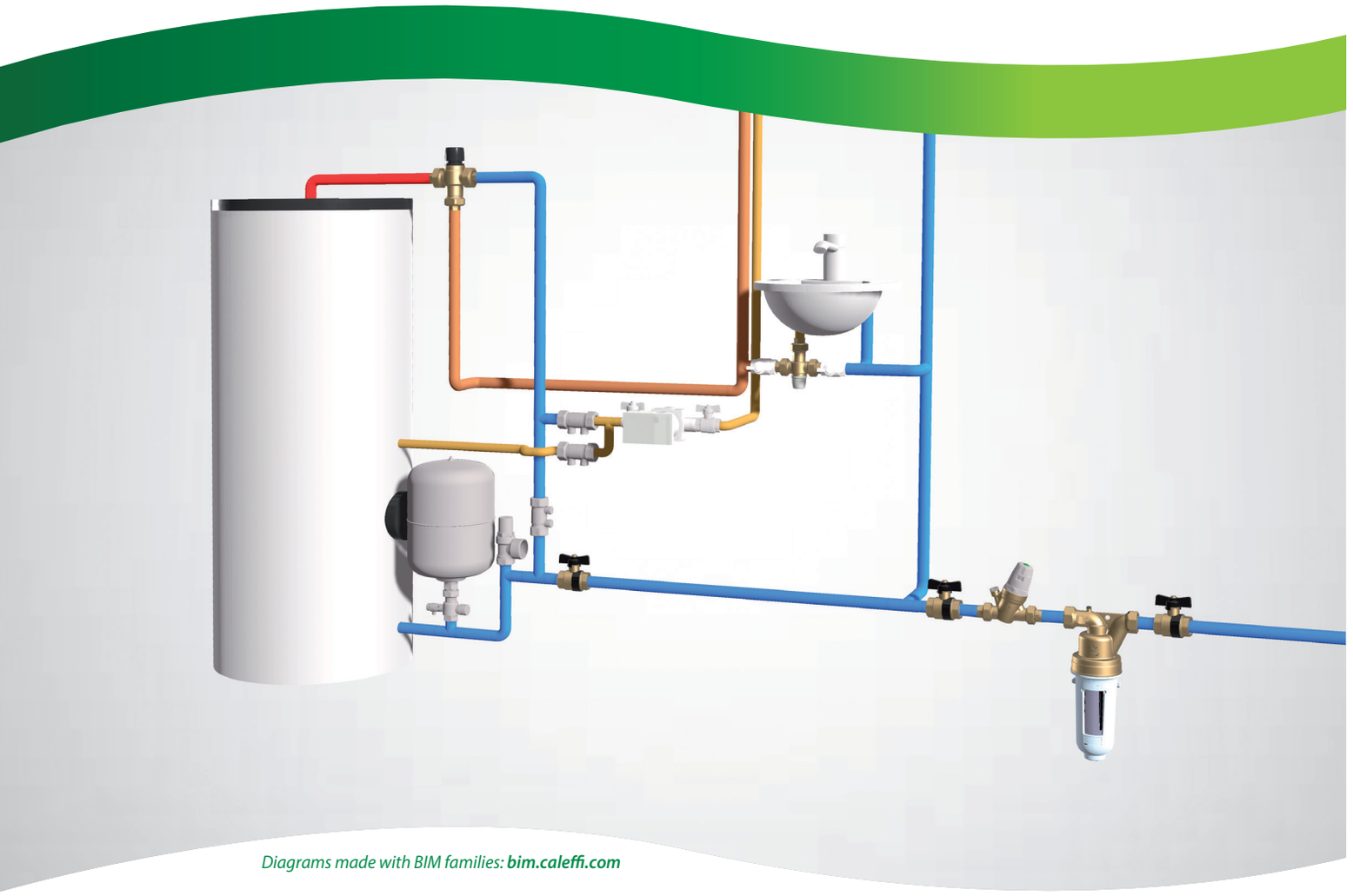

Diagrams made with BIM families: ***bim.caleffi.com***

Thermostatic mixing valves for small applications
Tempering valves for installation at the point of distribution
Anti-scald thermostatic mixing valves at the point of use
Adjustable thermostatic mixing valve for under sink installation
Anti-scald tempering and thermostatic mixing valves
“L” pattern adjustable thermostatic mixing valve
Combined group for pressure and temperature control
Thermostatic mixing valves for commercial applications
Thermostatic mixing valves with thermal disinfection
Hybrid electronic mixing valves
Electronic mixing valve with thermal disinfection - 230 V
Electronic mixing valve with thermal disinfection - 24 V
Advanced electronic mixing valve with connectivity
Spare parts for hybrid electronic mixing valves
Spare parts for electronic mixing valve
Multifunction thermostatic regulators
Thermostatic regulator with built-in check valve
Standard thermostatic regulators
Accessories for thermostatic regulators

Domestic Water Sizer
DOMESTIC WATER SYSTEM SIZER ALSO FOR SMARTPHONE
Available on www.caleffi.com and app for smartphone.
Download the version for your iOS and Android® mobile phone.

THERMOSTATIC MIXING VALVES

Thermostatic mixing valves for small applications



520

Adjustable thermostatic mixing valve.

Maximum working pressure: 10 bar
Medium temperature range: 2–90 °C
Material: brass
Finish: nickel plated

Code	Connection	Adjustment temperature (°C)	Kv (m^3/h)		
520430	1/2″F	30–48	1,30	1	50
520440	1/2″F	40–60	1,30	1	50
520530	3/4″F	30–48	1,80	1	50
520540	3/4″F	40–60	1,80	1	50
520630	1″F	30–48	2,75	1	10
520640	1″F	40–60	2,75	1	10

522

Adjustable thermostatic mixing valve. For installation under hot water storage heaters.

Maximum working pressure: 10 bar
Medium temperature range: 2–90 °C
Material: brass
Finish: nickel plated



Code	Connection	Adjustment temperature (°C)	Kv (m^3/h)		
522430	1/2″F	30–48	1,30	1	-
522440	1/2″F	40–60	1,30	1	-



521

Adjustable anti-scale thermostatic mixing valve.
PATENT

Maximum working pressure: 14 bar
Medium temperature range: 2–85 °C
Material: dezincification resistant brass DR "low lead"
Finish: nickel plated

Code	Connection	Notes	Adjustment temperature (°C)	Kv (m^3/h)		
521400	1/2″M	-	30–65	2,6	1	10
521500	3/4″M	-	30–65	2,6	1	10
521503	3/4″M	with check valves	30–65	2,6	1	10



521 NEW

Adjustable anti-scale thermostatic mixing valve.
PATENT

Maximum working pressure: 14 bar
Medium temperature range: 2–85 °C
Material: dezincification resistant brass DR "low lead"
Finish: yellow brass

Code	Connection	Notes	Adjustment temperature (°C)	Kv (m^3/h)		
521402	1/2″M	-	30–65	2,6	1	10
521502	3/4″M	-	30–65	2,6	1	10
521505	3/4″M	with check valves	30–65	2,6	1	10



521

Adjustable, anti-scale thermostatic mixing valve with check valves, strainers at the inlets and compression ends.

Maximum working pressure: 14 bar
Medium temperature range: 2–85 °C
Material: dezincification resistant brass DR "low lead"
Finish: nickel plated

Code	Connection	Adjustment temperature (°C)	Kv (m^3/h)		
521115	Ø 15	30–65	2,6	1	10
521122	Ø 22	30–65	2,6	1	10

Tempering valves for installation at the point of distribution



5219

Tempering valve adjustable with knob, for temperature control at the distribution point.
Complete **with thermal shut-off function**.
PATENT

Maximum working pressure: 10 bar
Medium temperature range: 2–90 °C
Material: dezincification resistant brass DR "low lead"
Finish: nickel plated

Code	Connection	Notes	Adjustment temperature (°C)	Kv (m^3/h)		
521934	1/2″ M	-	35–65	1,5	1	10
521935	3/4″ M	-	35–65	1,7	1	10
521936	1″ M	-	35–65	3,0	1	5
521914	1/2″ M	with check valves and strainers	35–65	1,5	1	10
521915	3/4″ M	with check valves and strainers	35–65	1,7	1	10
521916	1″ M	with check valves and strainers	35–65	3	1	5



5218

Tempering valve, adjustable with knob, with check valves and strainers. For temperature control at the distribution point.
Complete **with thermal shut-off function**.
Certified to EN 15092 standard.
PATENT

Maximum working pressure: 10 bar
Medium temperature range: 2–90 °C
Material: dezincification resistant brass DR "low lead"
Finish: nickel plated

Code	Connection	Adjustment temperature (°C)	Kv (m^3/h)		
521814	1/2″ M	45–65	1,5	1	10
521815	3/4″ M	45–65	1,7	1	10
521816	1″ M	45–65	3,0	1	5



5218

Pre-formed shell insulation.
For 5213, 5217, 5218 and 5219 series 1/2″ and 3/4″ thermostatic mixing valves.

Code	Notes		
CBN521814	1/2″	1	25
CBN521815	3/4″	1	25

Anti-scald thermostatic mixing valves at the point of use



5213

Adjustable thermostatic mixing valve with check valves and strainers.
High thermal performance device **with anti-scald safety function**.
Certified NHS D08, BS 7942, EN 1111 and EN 1287 standards (DN 15 - DN 20).

Maximum working pressure: 10 bar
Medium temperature range: 2–85 °C
Material: dezincification resistant brass DR
Finish: nickel plated

Code	Connection	Adjustment temperature (°C)	Kv (m^3/h)		
521304	1/2″ M	30–50	1,5	1	10
521303	3/4″ M	30–50	1,7	1	10
521306	1″ M	30–50	3,0	1	5



5213

Adjustable thermostatic mixing valve with check valves, strainers and compression ends.
High thermal performance device **with anti-scald safety function**.
Certified to NHS D08, BS 7942, EN 1111 and EN 1287 standards.

Maximum working pressure: 10 bar
Medium temperature range: 2–85 °C
Material: dezincification resistant brass DR
Finish: nickel plated

Code	Connection	Adjustment temperature (°C)	Kv (m^3/h)		
521315	Ø 15	30–50	1,5	1	10
521322	Ø 22	30–50	1,7	1	10



5217

Thermostatic mixing valve, adjustable with knob, with check valves and strainers.
High thermal performance device **with anti-scald safety function**.
Certified to NF 079 standard doc. 8.

Maximum working pressure: 10 bar
Medium temperature range: 2–85 °C
Material: brass
Finish: nickel plated

Code	Connection	Adjustment temperature (°C)	Kv (m^3/h)		
521714	1/2″ M	30–50	1,50	1	10
521713	3/4″ M	30–50	1,85	1	10

Adjustable thermostatic mixing valve for under sink installation



5212

Adjustable thermostatic mixing valve for under sink installation.
Complete with mounting brackets and adjustment key.
High thermal performance device with anti-scald safety function.
With check valves and strainers at the inlets.
Certified to ASSE 1070 standard.

Maximum working pressure: 10 bar
Medium temperature range: 2–90 °C
Material: dezincification resistant brass DR "low lead"

Code	Connection	Adjustment temperature (°C)	Kv (m^3/h)		
521201	3/8" M	35–50	0,45	1	25

Thermostatic mixing valves for low temperature applications



5213 NEW

Adjustable thermostatic mixing valve for low-temperature applications, **with check valves and strainers**.

Maximum working pressure: 10 bar
Medium temperature range: 2–60 °C
Material: dezincification resistant brass DR "low lead"

Code	Connection	Adjustment temperature (°C)	Kv (m^3/h)		
521344	1/2" M	15–30	1,5	1	10
521345	3/4" M	15–30	1,7	1	10



5213

Adjustable anti-scald tempering valve with check valves and strainers.
Certified to AS 4032.2, NHS D08, BS 7942, EN 1111 e EN 1287.
Maximum working pressure: 14 bar
Medium temperature range: 2–85 °C
Material: dezincification resistant brass DR "low lead"

Lead Free AS 4032.2 WMKA02466

Code	Connection	Adjustment temperature (°C)	Kv (m^3/h)		
521325 AUS	1" M	20–50	4,2	1	5

Adjustment temperature cod. 521325 AUS: 16–50 °C for applications not requiring Watermark compliance.

Anti-scald tempering and thermostatic mixing valves



5213

Adjustable anti-scald tempering valve with check valves and strainers.
Certified to AS 4032.2, NHS D08, BS 7942, EN 1111 e EN 1287.
Maximum working pressure: 14 bar
Medium temperature range: 2–85 °C
Material: dezincification resistant brass DR "low lead"

Lead Free AS 4032.2 WMKA02466

Code	Connection	Notes	Adjustment temperature (°C)	Kv (m^3/h)		
521312 AUS	1/2" M	with insulation	30–50	1,5	1	10
521319 AUS	3/4" M	with insulation	30–50	1,7	1	5
521325 AUS	1" M		20–50	4,2	1	5

5213

Adjustable thermostatic mixing valve with isolating valves, check valves and strainers.
High thermal performance device with anti-scald safety function.
Certified to AS 4032.1.

Maximum working pressure: 14 bar
Medium temperature range: 2–85 °C
Material: dezincification resistant brass DR "low lead"



Lead Free AS 4032.1 WMKA02466 AS 1357.1/2 WMK25724

Code	Connection	Adjustment temperature (°C)	Kv (m^3/h)		
521312TMX AUS	1/2" M	30–50	1,3	1	-
521319TMX AUS	3/4" M	30–50	1,4	1	6

"L" pattern adjustable thermostatic mixing valve



5200

Adjustable thermostatic mixing valve with knob.
Complete with check valves and strainers.
Certified to EN 1111 and EN 1287 standards.

Maximum working pressure: 10 bar
Medium temperature range: 2–90 °C
Material: dezincification resistant brass DR "low lead"

Code	Connection	DN	Adjustment temperature (°C)	Kv (m^3/h)		
520040	1″M	DN 15	35–65	1,5	1	10
520050	3/4″M	DN 20	35–65	1,7	1	-
520060	1″M	DN 25	35–65	1,7	1	5



520

Connection tee.
Complete with check valve.
For 5200 series thermostatic mixing valve.

Maximum working pressure: 10 bar
Medium temperature range: 2–90 °C
Material: dezincification resistant brass DR "low lead"

Code	Inlet connection	Outlet connection	Connection	DN		
520004	1″M	3/4″M captive nut	1″F	DN 20	1	20



5201

Control unit for domestic hot water temperature at the point of distribution.
Note (*) with off-centre fittings
Complete with:
- thermostatic mixing valve with thermal shut-off function;
- tee complete with check valves for cold water connection.

Mixing valve certified to EN 1111 and EN 1287.

Maximum working pressure: 10 bar
Medium temperature range: 2–90 °C
Material: dezincification resistant brass DR "low lead"

Code	Connection	Notes	DN	Adjustment temperature (°C)	Kv (m^3/h)		
520150	3/4″M	-	DN 20	35–65	1,7	1	-
520160	1″M	-	DN 25	35–65	3,0	1	-
520162	1″M	(*)	DN 25	35–65	3,0	1	-

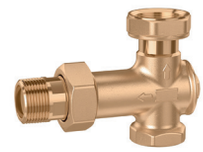

520

Accessory kit for recirculation connection complete with check valves.

Maximum working pressure: 10 bar
Medium temperature range: 2–90 °C
Material: brass

Code	Inlet connection	Outlet connection	Connection	Article use		
520005	3/4″M	3/4″F	1″F	520155	1	-



5201

Pre-formed shell insulation for control unit for domestic hot water temperature at the point of distribution 5201 series.

Code	Article use		
CBN520150	520150	1	20
CBN520160	520160	1	16



6480

Pair of off-centre fittings.
For connecting zone valves unit 6480, 633 series and respective by-pass tee 6490, 635 series to any dual manifold with outlet centre distance between 50 and 70 mm.

Code	Connection		
648005	3/4″M	1	-
648006	1″M	1	-



5201

Control unit for domestic hot water temperature at the point of distribution, complete with recirculation connection.
Complete with:
- thermostatic mixing valve with thermal shut-off function;
- tee for cold water connection complete with check valves
- kit for recirculation connection complete with check valves;
- shut-off valves;
- temperature gauge with pocket on the mixed water outlet.

Mixing valve certified to EN 1111 and EN 1287.

Maximum working pressure: 10 bar
Medium temperature range: 2–90 °C
Material: dezincification resistant brass DR "low lead"

Code	Inlet connection	Outlet connection	DN	Adjustment temperature (°C)	Kv (m^3/h)		
520155	3/4″F	3/4″F	DN 20	35–65	1,7	1	-

Combined group for pressure and temperature control



539...H

Combined group for pressure and temperature control in domestic water systems.
Complete with:
- 539H series combined unit, cold water circuit;
- 539H series combined unit, hot water circuit;
- adjustable thermostatic mixing valve with advanced thermal performance and anti-scald function;
- connection tee complete with check valve;
- pressure gauges (optional).

Thermostatic mixing valve certified to EN 1111 and EN 1287.

Maximum working pressure: 10 bar
Medium temperature range: 2–80 °C
Material: dezincification resistant brass DR "low lead"

Code	Inlet connection	Outlet connection	Adjustment temperature (°C)	Kv (m^3/h)		
539500H	Rp 3/4" F	3/4" M	35–65	1,7	1	-

Thermostatic mixing valves for commercial applications



5231

Adjustable thermostatic mixing valve, for centralised systems.
Composite anti-scale internal regulator.
PATENT

Maximum working pressure: 14 bar
Medium temperature range: 2–90 °C
Material: dezincification resistant brass DR

Code	Connection	Notes	Adjustment temperature (°C)	Kv (m^3/h)		
523140	1/2" M	-	35–65	4,3	1	5
523150	3/4" M	-	35–65	4,5	1	-
523160	1" M	-	35–65	5,5	1	-
523170	1 1/4" M	-	35–65	7,6	1	-
523180	1 1/2" M	-	35–65	11,0	1	-
523190	2" M	-	35–65	13,3	1	-
523163	1" M	with check valves	35–65	5,5	1	-
523173	1 1/4" M	with check valves	35–65	7,6	1	-



5231

Adjustable thermostatic mixing valve, for centralised systems.
With check valves and compression ends.
Antiscale inner regulator in technopolymer.

Maximum working pressure: 14 bar
Maximum inlet temperature: 90 °C
Material: dezincification resistant brass DR

Code	Connection	Adjustment temperature (°C)	Kv (m^3/h)		
523162	Ø 28	35–65	7,6	1	-



5230

Adjustable thermostatic mixing valve, **with replaceable cartridge**, for centralised systems.

Maximum working pressure: 14 bar
Medium temperature range: 2–85 °C
Material: brass

Code	Connection	Notes	Adjustment temperature (°C)	Kv (m^3/h)		
523040	1/2″ M	-	30–65	4,0	1	-
523050	3/4″ M	-	30–65	4,5	1	-
523060	1″ M	-	30–65	6,9	1	-
523070	1 1/4″ M	-	30–65	9,1	1	-
523080	1 1/2″ M	-	36–60	14,5	1	-
523090	2″ M	-	36–60	19,0	1	-
523043	1/2″ M	with check valves	30–65	4,0	1	-
523053	3/4″ M	with check valves	30–65	4,5	1	-
523063	1″ M	with check valves	30–65	6,9	1	-
523073	1 1/4″ M	with check valves	30–65	9,1	1	-

5230

Adjustable thermostatic mixing valve, **with replaceable cartridge**, for centralised systems.
With check valves and compression ends.

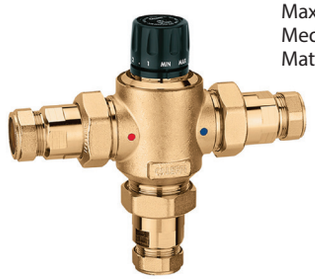

Maximum working pressure: 14 bar
Medium temperature range: 2–85 °C
Material: brass

Code	Connection	Adjustment temperature (°C)	Kv (m^3/h)		
523052	Ø 22	30–65	4,5	1	-
523062	Ø 28	30–65	6,9	1	-



524

Adjustable thermostatic mixing valve for centralised systems. With recirculating connection.
Note (*): without recirculation connection

Maximum working pressure: 10 bar
Medium temperature range: 2–90 °C
Material: brass

Code	Connection	Notes	DN	Adjustment temperature (°C)	Kv (m^3/h)		
524400	1 1/8″ M	(*)	DN 15	30–65	1,4	1	-
524500	1 1/4″ M	-	DN 20	30–65	2,5	1	-
524600	1 1/2″ M	-	DN 25	30–65	4,0	1	-
524700	2″ M	-	DN 32	30–65	7,7	1	-
524800	2 1/4″ M	-	DN 40	36–60	11,5	1	-
524900	2 3/4″ M	-	DN 50	36–60	15,0	1	-

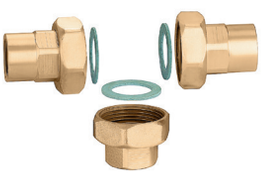

524

Connection kit for mixing valves with threaded connections, 524 series.
Complete with:
- 2 female unions with check valves, strainers and seals;
- 1 female union with seal.

Code	Connection	Article use		
524004	1/2″ F	524400	1	
524005	3/4″ F	524500	1	-
524006	1″ F	524600	1	-
524007	1 1/4″ F	524700	1	-
524008	1 1/2″ F	524800	1	-
524009	2″ F	524900	1	-



524

Adjustable thermostatic mixing valve.
Flanged connections.
Complete with counterflange EN 1092-1.
With connection for the recirculation.
With insulation.

Maximum working pressure: 10 bar
Medium temperature range: 2–90 °C
Temperature setting: 55 °C
Nominal pressure: PN 10
Material: bronze

Code	Connection	Adjustment temperature (°C)	Kv (m^3/h)		
524060	DN 65 - PN 10	45–65	32	1	-
524080	DN 80 - PN 10	45–65	43	1	-

Thermostatic mixing valves with thermal disinfection

6005 LEGIOFLOW®

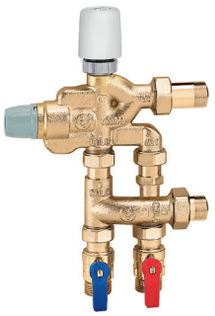

Multi-function compact unit for temperature control, thermal disinfection and distribution for domestic water system.
Complete with:
- **anti-scald** thermostatic mixing valve;
- flushing valve for **thermal disinfection**, with normally closed **thermo-electric actuator**;
- ball shut-off valve with built-in strainers and check valves;
- **outlet kit for cold water circuit**.

Note (*): without thermo-electric actuator.
Performance according to the NF 079 doc. 8, EN 1111 and EN 1287 standards.
PATENT

Maximum working pressure: 10 bar
Medium temperature range: 5–85 °C
Adjustment temperature range: 30–50 °C
Electric supply: 230 V AC
Running power consumption: 3 W
Protection class: IP 44
Supply cable length: 0,8 m
Material: dezincification resistant brass DR
Temperature setting: 43 °C

Code	Connection	Notes	Kv mixing valve (m^3/h)	Kv flushing valve (m^3/h)		
600500	3/4" M	-	1,75	1,80	1	6
600501	3/4" M	(*)	1,75	1,80	1	6

Hydraulic diagram

Operation with mixing
- Flushing valve closed
- Cold water valve open

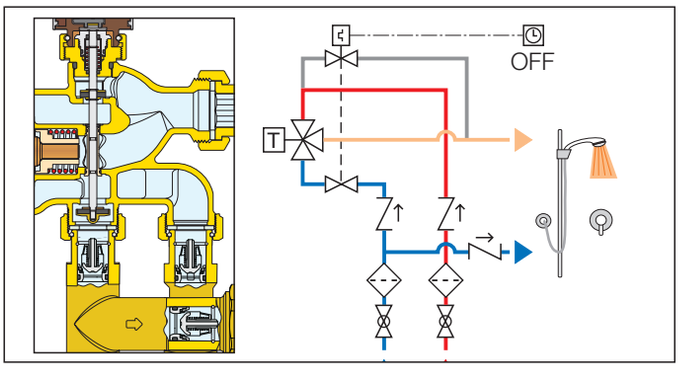

Operation with thermal disinfection
- Flushing valve open
- Cold water valve closed

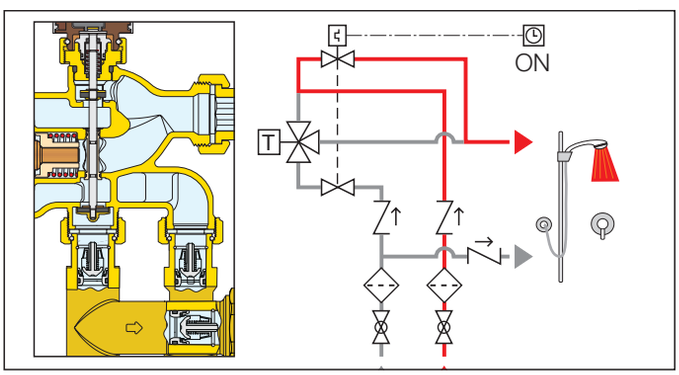

6005 LEGIOFLOW®

Multi-function compact unit for temperature control, thermal disinfection and distribution for domestic water system.
Complete with:
- **anti-scald** thermostatic mixing valve;
- flushing valve for **thermal disinfection** complete with **thermo-electric actuator**;
- ball shut-off valve with built-in strainers and check valves;
- **outlet kit for cold water circuit**;
- distribution manifolds with shut-off valves;
- box for manifolds code 362056 (560x330x80).

Note (*): without thermo-electric actuator.
Performance according to NF 079 doc. 8,EN 1111 and EN 1287.
PATENT

Maximum working pressure: 10 bar
Adjustment temperature range: 30–50 °C
Maximum inlet temperature: 85 °C
Electric supply: 230 V AC
Running power consumption: 3 W
Protection class: IP 44
Supply cable length: 0,8 m
Material: dezincification resistant brass DR
Temperature setting: 43 °C
Outlet centre distance: 35 mm

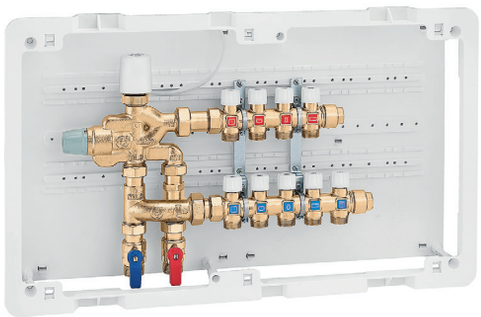

Code	Connection	Hot outlet connection	Cold outlet connection	Notes		
600530	3/4" M	23 p. 1,5 - 2 out.	23 p. 1,5 - 3 out.	-	1	-
600540	3/4" M	23 p. 1,5 - 3 out.	23 p. 1,5 - 4 out.	-	1	-
600550	3/4" M	23 p. 1,5 - 4 out.	23 p. 1,5 - 5 out.	-	1	-

6002



Timer with programmable key, settings from 0.5 to 15 minutes.
To operate the valves used to carry out thermal disinfection of circuit sections, up to the taps.

Electric supply: 230 V AC

Code		
600200	1	-

ELECTRONIC MIXING VALVES

Hybrid electronic mixing valves



6000 LEGIOMIX® 2.0

Hybrid electronic mixing valve.
Complete with:
- hybrid mixing valve with motorised actuator;
- electronic regulator with programming of temperature levels and thermal disinfection cycles, built into the actuator casing;
- integrated flow temperature probe;
- circuit return temperature probe;
- flow temperature gauge.

Fitted for data saving function (optional), with recording of temperatures and functional parameters.
Fitted for connection to remote control system (optional).
PATENT PENDING

Maximum working pressure: 10 bar
Medium temperature range: 5–90 °C
Adjustment temperature range: 35–65 °C
Disinfection temperature range: 50–85 °C
Electric supply: 230 V AC
Protection class: IP 54
Material: dezincification resistant brass DR

Code	Connection	DN	Kv (m^3/h)		
600045 EST	1/2" M	DN 15	4,3	1	-
600055 EST	3/4" M	DN 20	4,3	1	-
600065 EST	1" M	DN 25	7,6	1	-
600075 EST	1 1/4" M	DN 32	10,0	1	-
600085 EST	1 1/2" M	DN 40	13,0	1	-
600095 EST	2" M	DN 50	18,0	1	-



6000 LEGIOMIX® 2.0

Optional board MODBUS-RTU transmission and logs.
By installing the board on the device, it will be possible to manage the device through a specific MODBUS-RTU transmission protocol for use in Building Automation and Control Systems (BACS).
The package includes the optional board, main board connection cable and logs.

Code		
600001	1	-



6000 LEGIOMIX® 2.0

RS-485 USB cable and Caleffi Software.
Using the cable with RS-485 USB interface and the Caleffi Software included in the package, it is possible to manage the device from PC.
The two software programs can manage LEGIOMIX® 24 V and LEGIOMIX® 2.0 mixers.

Code		
600002	1	-

Electronic mixing valve with thermal disinfection - 230 V

6000 LEGIOMIX®

Electronic mixing valve with programmable thermal disinfection and check on disinfection, 230 V. Male threaded connections with union. Female threaded mixed connection.
Complete with:
- three-way ball valve;
- actuator;
- regulator;
- flow temperature probe;
- return temperature probe.

PATENT

Maximum working pressure: 10 bar
Medium temperature range: 5–100 °C
Adjustment temperature range: 20–85 °C
Disinfection temperature range: 40–85 °C
Electric supply: 230 V AC
Running power consumption: (6,5+6) VA
Protection class: IP 65 (actuator)
Material: brass



Code	Connection	Kv (m^3/h)		
600051	3/4″ M	8,4	1	-
600061	1″ M	10,6	1	-
600071	1 1/4″ M	21,2	1	-
600081	1 1/2″ M	32,5	1	-
600091	2″ M	41,0	1	-

6000 LEGIOMIX®

Electronic mixing valve with programmable thermal disinfection and check on disinfection, 230 V. Flanged connection.
To be coupled with flat counterflanges EN 1092-1.
Complete with:
- three-way ball valve;
- actuator;
- regulator;
- flow temperature probe;
- return temperature probe.

PATENT

Maximum working pressure: 10 bar
Medium temperature range: 5–100 °C
Adjustment temperature range: 20–85 °C
Disinfection temperature range: 40–85 °C
Electric supply: 230 V AC
Running power consumption: (6,5+10,5) VA
Protection class: IP 65 (actuator)
Material: dezincification resistant brass DR “low lead”

Pb LOW LEAD



Code	Connection	Kv (m^3/h)		
600006	DN 65 - PN 16	90,0	1	-
600008	DN 80 - PN 16	105,0	1	-



6001

Anti-scald device for domestic hot water use.

Material: brass
Finish: chrome plated
Temperature setting: 48 °C

Code	Connection		
600140	1/2″ F	1	10

Electronic mixing valve with thermal disinfection - 24 V

6000 LEGIOMIX®

Electronic mixing valve with programmable thermal disinfection and check on disinfection, 24 V. Male threaded connections with union. Female threaded mixed connection.
Complete with:
- three-way ball valve;
- actuator;
- regulator;
- flow temperature probe;
- return temperature probe.

Fitted for remote control connection with RS-485 and MODBUS-RTU protocols.
With auxiliary microswitch.
PATENT

Maximum working pressure: 10 bar
Medium temperature range: 5–100 °C
Adjustment temperature range: 20–85 °C
Disinfection temperature range: 40–85 °C
Electric supply: 24 V AC
Running power consumption: (6,5+6) VA
Protection class: IP 65 (actuator)
Material: brass



Code	Connection	Mixed connection	Kv (m^3/h)		
600054	3/4" M	3/4" F	8,4	1	-
600064	1" M	1" F	10,6	1	-
600074	1 1/4" M	1 1/4" F	21,2	1	-
600084	1 1/2" M	1 1/2" F	32,5	1	-
600094	2" M	2" F	41,0	1	-

6000 LEGIOMIX®

Electronic mixing valve with programmable thermal disinfection and check on disinfection, 24 V. Flanged connection PN 16.
To be coupled with flat counterflanges EN 1092-1.
Complete with:
- three-way ball valve;
- actuator;
- regulator;
- flow temperature probe;
- return temperature probe.

Fitted for remote control connection with RS-485 and MODBUS-RTU protocols.
With auxiliary microswitch.
PATENT

Maximum working pressure: 10 bar
Medium temperature range: 5–100 °C
Adjustment temperature range: 20–85 °C
Disinfection temperature range: 40–85 °C
Electric supply: 24 V AC
Running power consumption: (6,5+10,5) VA
Protection class: IP 65 (actuator)
Material: dezincification resistant brass DR "low lead"



Code	Connection	Kv (m^3/h)		
600016	DN 65 - PN 16	90,0	1	-
600018	DN 80 - PN 16	105,0	1	-



7550

BACnet/MODBUS-RTU converter for connection with BMS systems.
Pre-configured for communication with:
- CONTECA EASY heat meters and AQUAPRO EASY data acquisition devices (max. 35 devices).
- LEGIOMIX (max. 32 devices) and LEGIOMIX 2.0 (max. 25 devices) electronic mixing valves.

To be mounted on DIN rail.

Ambient temperature range: -20–70 °C
Electric supply: 12-24 V DC, 24 V AC
Running power consumption: 3 W

Code	Notes		
755052		1	-

Advanced electronic mixing valve with connectivity

6003 LEGIOMIX®evo

Advanced electronic mixing valve with programmable thermal disinfection. **With connectivity**. Male threaded connections with union. Female threaded mixed connection.
Notes:
- A: 3-point control signal
- B: 0-10 V control signal with failsafe
Material: dezincification resistant brass DR **"low lead" (24 V version)**
Material: brass (230 V version)
Complete with:
- three-way ball valve;
- actuator;
- regulator;
- flow temperature probe;
- return temperature probe;
- storage temperature probe (optional code 600003).
PATENT

Maximum working pressure: 10 bar
Medium temperature range: 5–100 °C
Adjustment temperature range: 20–85 °C
Disinfection temperature range: 40–85 °C
Running power consumption: (9+6) VA
Protection class: IP 65 (actuator)

Pb LOW LEAD



Code	Connection	Notes	Electric supply	Kv (m^3/h)		
600351	3/4″M	**A**	230 V AC	8,4	1	-
600361	1″M	**A**	230 V AC	10,6	1	-
600371	1 1/4″M	**A**	230 V AC	21,2	1	-
600381	1 1/2″M	**A**	230 V AC	32,5	1	-
600391	2″M	**A**	230 V AC	41,0	1	-
600354	3/4″M	**A**	24 V AC	8,4	1	-
600364	1″M	**A**	24 V AC	10,6	1	-
600374	1 1/4″M	**A**	24 V AC	21,2	1	-
600384	1 1/2″M	**A**	24 V AC	32,5	1	-
600394	2″M	**A**	24 V AC	41,0	1	-
600353	3/4″M	**B**	24 V AC	8,4	1	-
600363	1″M	**B**	24 V AC	10,6	1	-
600373	1 1/4″M	**B**	24 V AC	21,2	1	-
600383	1 1/2″M	**B**	24 V AC	32,5	1	-
600393	2″M	**B**	24 V AC	41,0	1	-

6003 LEGIOMIX®evo

Advanced electronic mixing valve with programmable thermal disinfection. **With connectivity**. Flanged connections.
To be coupled with counterflanges EN 1092-1.
Notes:
- A: 3 point control signal
- B1: 0–10 V control signal with failsafe
- B2: 0–10 V control signal without failsafe
Complete with:
- three-way ball valve;
- actuator;
- regulator;
- flow temperature probe;
- return temperature probe;
- storage temperature probe (optional code 600003).
PATENT

Maximum working pressure: 10 bar
Medium temperature range: 5–100 °C
Adjustment temperature range: 20–85 °C
Disinfection temperature range: 40–85 °C
Running power consumption: (9+10) VA
Protection class: IP 65 (actuator)
Material: dezincification resistant brass DR "low lead"

Pb LOW LEAD



Code	Connection	Notes	Electric supply	Kv (m^3/h)		
600316	DN 65 - PN 16	**A**	230 V AC	90,0	1	-
600318	DN 80 - PN 16	**A**	230 V AC	105,0	1	-
600336	DN 65 - PN 16	**B1**	24 V AC	90,0	1	-
600338	DN 80 - PN 16	**B1**	24 V AC	105,0	1	-
600356	DN 65 - PN 16	**B2**	24 V AC	90,0	1	-
600358	DN 80 - PN 16	**B2**	24 V AC	105,0	1	-



6000

Storage temperature probe for electronic mixing valve 6003 series.

Code		
600003	1	-

Main specification

- Application in systems with high flow rates
- Ball mixing valve
- Programmable thermal disinfection
- Connectivity with Caleffi Cloud (via integrated ModBus or Bacnet) for remote control
- Easy to use via touchscreen
- Failsafe function in the event of electricity supply failure
- Recirculation pump management
- Three temperature probes: mixed, return and storage

Function

The electronic mixing valve is used in centralised systems, of any size, that produce and distribute domestic hot water.
With fully electronic operation, the regulator and actuator are separate devices to allow optimum positioning in the central unit and the relevant programming management.
The regulator is also designed for installation with previous versions of LEGIOMIX electronic mixing valves. Retrofitting is possible both if you decide to improve the functions of an existing mixing valve by installing an advanced regulator, and if it becomes necessary to replace the previous regulator due to a malfunction.

Failsafe function

The Failsafe function built into specific actuators allows automatic closure of the hot line to avoid endangering the system and users in the event of a power failure.

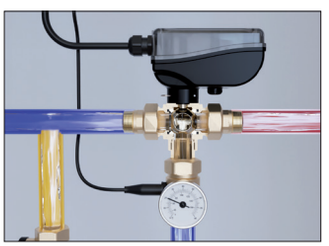

Recirculation pump management

The regulator can be used to set time bands for recirculation pump activation only when actually necessary, in order to optimise electricity and thermal energy consumption.

Touchscreen display

The large touchscreen display makes it easy and intuitive to adjust all regulator settings and to read the data required to ensure the system is working properly.

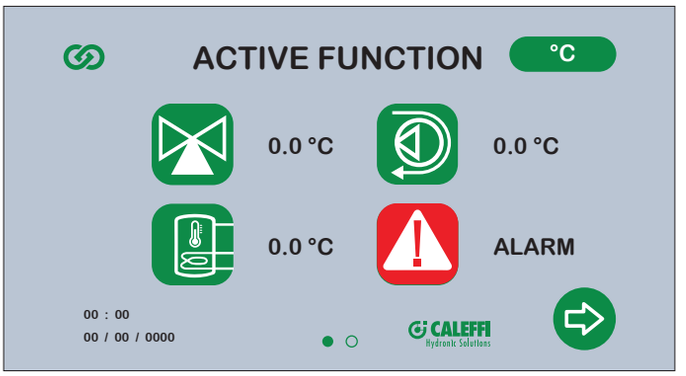

Display log and dashboard

LEGIOMIX evo can be used to manage all settings and to view all temperature and disinfection logs directly via the regulator display. When the device is online, the Caleffi cloud can be accessed and a dedicated dashboard provides the option of viewing detailed graphs and tables, as well as managing all regulator settings.

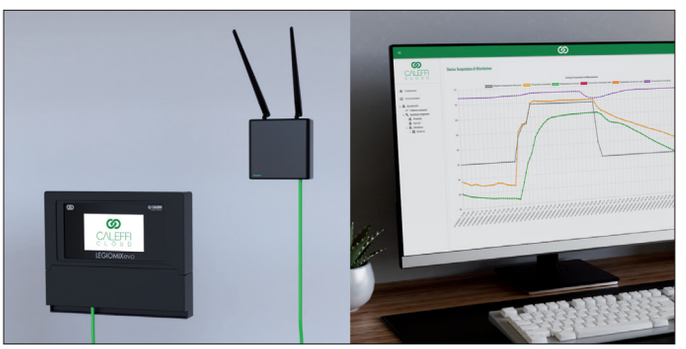

Application diagrams

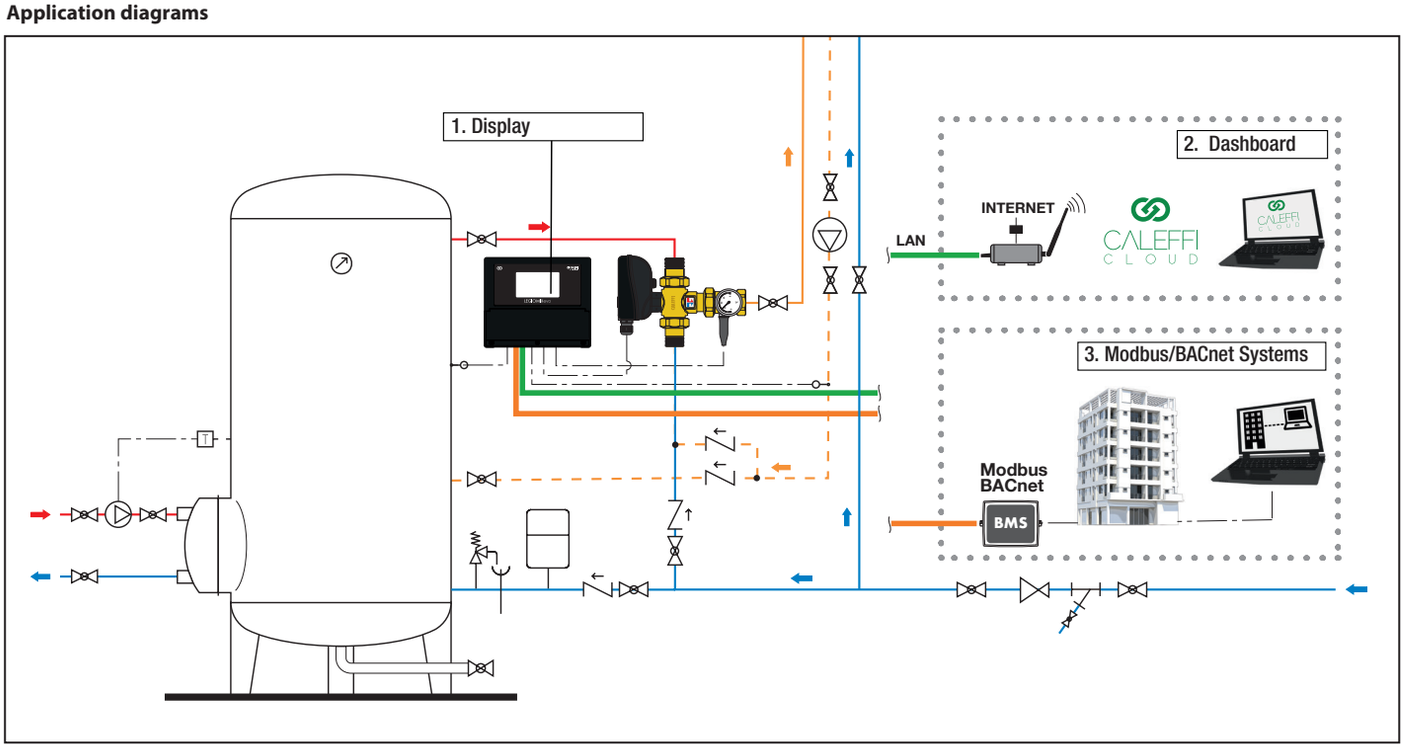

Spare parts for hybrid electronic mixing valves



Spare valve body without unions for hybrid electronic mixing valve 6000 series.

Code	Notes		
F0000964	DN 15	1	-
F0000965	DN 20	1	-
F0000966	DN 25	1	-
F0000967	DN 32	1	-
F0000968	DN 40	1	-
F0000969	DN 50	1	-



Spare digital regulator with actuator for hybrid electronic mixing valve 6000 series.

Code	Notes		
F0000970	DN 15 - DN 20	1	-
F0000971	DN 25 - DN 50	1	-

Spare parts for electronic mixing valve



Spare valve body without unions and probe holder for electronic mixing valve 6000 and 6003 series with threaded connections.

Code	Article use		
F69798	600051, 600054, 600351	1	-
F69799	600061, 600064, 600361	1	-
F69801	600071, 600074, 600371	1	-
F69803	600081, 600084, 600381, 600091, 600094, 600391	1	-



Spare actuator for electronic mixing valve 6000 and 6003 series with threaded connections.

Code	Notes		
645112	230 V AC - 3 point for 6000 and 6003 series	1	-
645114	24 V AC - 3 point for 6000 and 6003 series	1	-
645124	24 V AC/DC - 0–10 V with failsafe for 6003 series	1	-



Spare actuator for electronic mixing valve 6000 and 6003 series with flanged connections.

Code	Notes		
600202	230 V AC - 3 point for 6000 and 6003 series	1	-
600204	24 V AC/DC - 3 point for 6000 series	1	-
600214	24 V AC/DC - 0–10 V without failsafe for 6003 series	1	-
600224	24 V AC/DC - 0–10 V with failsafe for 6003 series	1	-



Spare regulator for electronic mixing valve 6000 series.

Code	Notes		
F69433	230 V	1	-
F0000961	24 V	1	-



Spare regulator for electronic mixing valve 6003 series.
Compatible with 6000 series controller replacement.

Code	Notes		
F0007677	230 V	1	-
F0007683	24 V	1	-

THERMOSTATIC REGULATOR FOR DOMESTIC HOT WATER RECIRCULATION CIRCUITS

Multifunction thermostatic regulators



116

Thermostatic regulator for domestic hot water recirculation circuits.
Complete with automatic thermostatic thermal disinfection function.
With temperature gauge for checking circuit temperature.

Maximum working pressure: 16 bar
Disinfection temperature range: 70 °C
Material: dezincification resistant brass DR "low lead"

Code	Connection	DN	Adjustment temperature (°C)		
116240	Rp 1/2"F	DN 15	35–60	1	10
116250	Rp 3/4"F	DN 20	35–60	1	10
116260	Rp 1"F	DN 25	35–65	1	5
116270	Rp 1 1/4"F	DN 32	35–65	1	5



116

Thermostatic regulator for domestic hot water recirculation circuits. Fitted for automatic or controlled thermal disinfection function.
With pocket for temperature gauge.

Maximum working pressure: 16 bar
Material: dezincification resistant brass DR "low lead"

Code	Connection	DN	Adjustment temperature (°C)		
116140	Rp 1/2"F	DN 15	35–60	1	10
116150	Rp 3/4"F	DN 20	35–60	1	10
116160	Rp 1"F	DN 25	35–65	1	5
116170	Rp 1 1/4"F	DN 32	35–65	1	5



116

Thermostatic regulator for domestic hot water recirculation circuits.
Fitted for automatic or controlled thermal disinfection function.
With temperature gauge.

Maximum working pressure: 16 bar
Material: dezincification resistant brass DR "low lead"

Code	Connection	DN	Adjustment temperature (°C)		
116141 AUS	Rp 1/2"F	DN 15	40–65	1	10
116151 AUS	Rp 3/4"F	DN 20	40–65	1	10

Thermostatic regulator with built-in check valve

116

Thermostatic regulator **with built-in check valve** for domestic hot water recirculation circuits.
Complete with automatic thermostatic thermal disinfection function.
With temperature gauge for circuit temperature check.

Maximum working pressure: 16 bar
Disinfection temperature range: 70 °C
Material: dezincification resistant brass DR "low lead"



Code	Connection	DN	Adjustment temperature (°C)		
116244	1/2"M	DN 20	35–60	1	10
116254	3/4"M	DN 20	35–60	1	10

116

Thermostatic regulator **with built-in check valve** for domestic hot water recirculation circuits.
Fitted for automatic or controlled thermal disinfection function.
With pocket for temperature gauge.

Maximum working pressure: 16 bar
Material: dezincification resistant brass DR "low lead"



Code	Connection	DN	Adjustment temperature (°C)		
116144	1/2"M	DN 20	35–60	1	10
116154	3/4"M	DN 20	35–60	1	10

Standard thermostatic regulators



Pb LOW LEAD

116

Thermostatic regulator for domestic hot water recirculation circuits.
With pocket for temperature gauge.

Maximum working pressure: 16 bar
Material: dezincification resistant brass DR "low lead"

Code	Connection	DN	Adjustment temperature (°C)		
116415	Ø 15	DN 15	40-65	1	10
116420	Ø 22	DN 20	40–65	1	10



Pb LOW LEAD

116

Thermostatic regulator for domestic hot water recirculation circuits.
With pocket for temperature gauge.

Maximum working pressure: 16 bar
Material: dezincification resistant brass DR "low lead"

Code	Connection	DN	Adjustment temperature (°C)		
116440	Rp 1/2" F	DN 15	40–65	1	10
116450	Rp 3/4" F	DN 20	40–65	1	10



Pb LOW LEAD

116

Thermostatic regulator for domestic hot water recirculation circuits.
Note (*) with WATERMARK certification
With temperature gauge for circuit temperature check.

Maximum working pressure: 16 bar
Material: dezincification resistant brass DR "low lead"

Lead Free WMTS 468 WM-040195

Code	Connection	Notes	DN	Adjustment temperature (°C)		
116441	Rp 1/2" F	-	DN 15	40-65	1	10
116451	Rp 3/4" F	-	DN 20	40–65	1	20
116451 AUS	Rp 3/4" F	(*)	DN 20	40–65	1	20

Accessories for thermostatic regulators



116

Cartridge for thermal disinfection function controlled by an actuator.

Code		
116000	1	10



116

Accessory temperature gauge for thermostatic regulators 116 series.

Temperature gauge scale: 0–80 °C

Code		
116010	1	20



116

Insulation shell.

Code	Notes		
CBN116140	1/2" - 3/4"	1	20
CBN116160	1" - 1 1/4"	1	-



116

Insulation shell for 1164 thermostatic regulators (1/2"-3/4")

Code	Notes		
CBN116440	1/2" - 3/4"	1	20

See page 162 for actuators

MANIFOLDS FOR DOMESTIC WATER SYSTEMS



Diagrams made with BIM families: ***bim.caleffi.com***

Distribution manifolds with individual shut-off valves
Distribution manifolds with main shut-off valves
Inspectable distribution manifolds with main shut-off valves
Unit with main shut-off valves
Inspectable unit with main shut-off valves
Accessories for manifolds 359 series
Accessories for modular manifolds
Spare parts for manifolds 359 series
Standard distribution manifold with individual shut-off valves
Accessories for standard manifold

MANIFOLDS FOR DOMESTIC WATER SYSTEMS

Distribution manifolds with individual shut-off valves

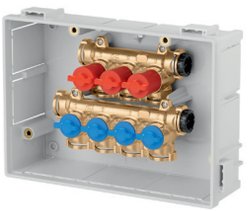

359

Domestic water distribution manifolds pre-assembled in boxes **with individual shut-off valves**.
Complete with:
- pair of manifolds with shut-off knobs;
- box for manifolds (270 x 190 x 80 mm) complete with supports for manifolds and fixing brackets;
- protection cover for mounting;
- 2 end fitting caps with fixing clips.

PATENT PENDING

Maximum working pressure: 10 bar
Medium temperature range: 5–90 °C
Outlet centre distance: 35 mm
Material: brass

Code	Hot outlet connection	Cold outlet connection		
359410	- 3 out., clip connection	- 4 out., clip connection	1	-
359510	- 4 out., clip connection	- 5 out., clip connection	1	-



359

Recessed door with push-to-open frame.
PATENT PENDING

Code			
359700	1	-

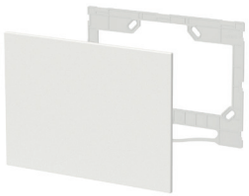

359

Aesthetic cover plate.
Complete with support plate.

Material: technopolymer

Code	Finish		
359801	white RAL 9010	1	-

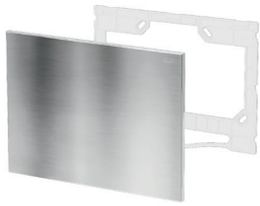

359

Aesthetic cover plate.
Complete with support plate.

Material: stainless steel

Code	Finish		
359802	polished	1	-
359803	brushed	1	-

Spare parts for manifolds 359 series

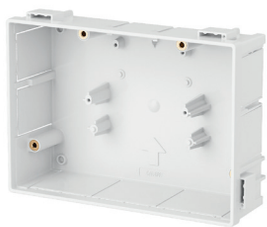

359

Box bottom.

Code	Notes	Article use		
359011	spare bottom for 3+4 individual shut-off valves	359410	1	-
359012	spare bottom for 4+5 individual shut-off valves	359510	1	-
359013	spare bottom for 3+4 main shut-off valves	359420, 359490	1	-
359014	spare bottom for main shut-off valves	359100, 359190	1	-



Individual shut-off valves cartridge.
For 359 series.

Code			
F0001305	1	-

Inspectable distribution manifolds with main shut-off valves

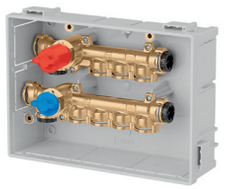

359

Inspectable domestic water distribution manifolds pre-assembled in boxes **with main shut-off valves**.
Complete with:
- pair of manifolds;
- box for manifolds (270 x 190 x 80 mm) complete with supports for manifolds and fixing brackets;
- protection cover for mounting;
- 4 caps with fixing clips.

PATENT PENDING

Maximum working pressure: 10 bar
Medium temperature range: 5–90 °C
Outlet centre distance: 32 mm
Material: brass

Code	Hot outlet connection	Cold outlet connection		
359490	- 3 out., clip connection	- 4 out., clip connection	1	-

359

Aesthetic cover plate.
Complete with support plate.

Material: technopolymer

Code	Finish		
359801	white RAL 9010	1	-

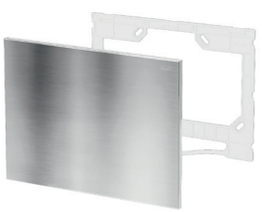

359

Aesthetic cover plate.
Complete with support plate.

Material: stainless steel

Code	Finish		
359802	polished	1	-
359803	brushed	1	-

Inspectable unit with main shut-off valves

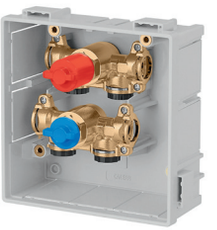

359

Inspectable unit **with main shut-off valves**.
Completet with:
- valve unit;
- box for manifolds (190x190x80 mm) with supports for shut-off valve unit;
- protection cover;
- 4 caps with fixing clips.

PATENT PENDING

Maximum working pressure: 10 bar
Medium temperature range: 5–90 °C
Material: brass

Code		
359190	1	-



359

Stainless steel aesthetic cover plate.

Code	Finish		
359892	polished	1	-
359893	brushed	1	-

Spare cartridges for manifolds 359 series



Cartridge for main shut-off valves (inspectable versions).
For 359 series.

Code	Article use		
F0001721	359490, 359190	1	-

Accessories for manifolds 359 series



359

Accessories for manifolds 359 series.

Medium temperature range: 5–90 °C
Maximum working pressure: 10 bar
Material: brass

Code	Notes		
359001	tee with fixing clip	1	-



359

Accessories for manifolds 359 series.

Material: technopolymer

Code	Notes		
359002	blind plug with fixing clip	1	-



359

Adapter with fixing clip.

Maximum working pressure: 10 bar
Medium temperature range: 5–90 °C
Material: dezincification resistant brass DR "low lead"

Code	Connection	Notes		
359003	23 p. 1,5	-	1	-
359004	1/2" M	Ø 13 flat seat	1	-
359005	3/4" M	Ø 18 flat seat	1	-
359006	3/4" M	Ø 18 Euroconus	1	-





359

Multi-grip press fittings for multi-layer pipes with fixing clip.

Code	Connection	Notes		
359024	Ø 16x2 compression ends	-	1	10
359064	Ø 20x2 compression ends	-	1	10
359025	Ø 16x2,25 compression ends	-	1	10
359065	Ø 20x2,25 compression ends	-	1	10
359066	Ø 20x2,5 compression ends	-	1	10
359087	Ø 26x3 compression ends	only with H - TH profile crimp tool	1	10

Can be used with H - TH - U profile crimp tool.
To use these fittings correctly, the multi-layer pipe must be calibrated with a Caleffi 679 series gauge before use.

Calibrator 679 series page 107

After calibrating the pipe with the calibrator, fit the pipe onto the fitting, taking care to insert it as far as it will go.
Check the pipe position through the peepholes.

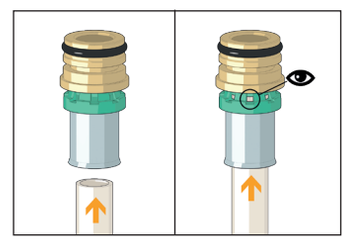

Crimp the pipe with the crimp tool until it clicks automatically.

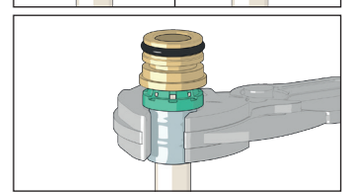

TH profile crimp tool

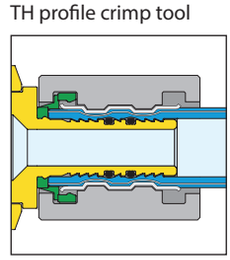

U profile crimp tool

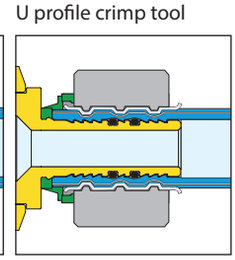

H profile crimp tool

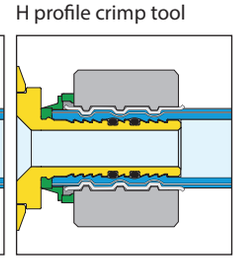

Insert the pipe complete with fitting into the seat on the manifold.

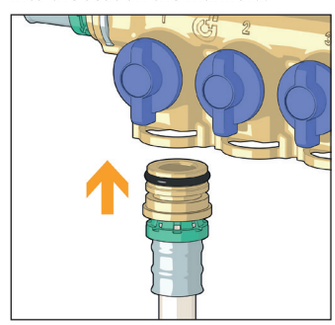

Fasten it with the dedicated fixing clip.

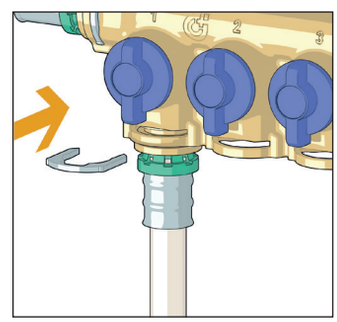

See page 162 for actuators

Accessories for modular manifolds



359

Manifold with individual shut-off valves (red knobs).

Code	Outlet connection		
359330	- 3 out., clip connection	1	-
359340	- 4 out., clip connection	1	-



359

Pair of brackets and fixing screws for hot water manifolds.

Material: stainless steel

Code		
359015	1	-



359

Long adapter with clip.

Material: brass

Code		
359017	1	-

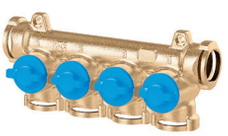

359

Manifold with individual shut-off valves (blue knobs).

Code	Outlet connection		
359240	- 4 out., clip connection	1	-
359250	- 5 out., clip connection	1	-



359

Pair of brackets and fixing screws for cold water manifolds.

Material: stainless steel

Code		
359016	1	-



359

Short adapter with clip.

Material: brass

Code		
359018	1	-

Characteristic components

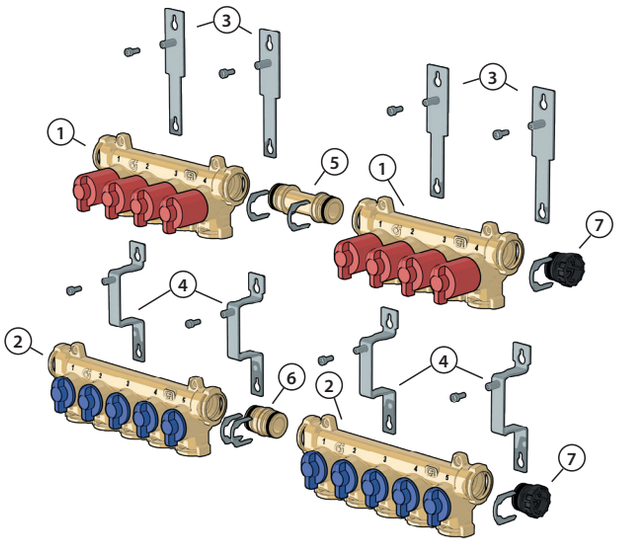

1. Hot water manifold with shut-off valves.
2. Cold water manifold with shut-off valves.
3. Pair of brackets and fixing screws for hot water manifold.
4. Pair of brackets and fixing screws for cold water manifold.
5. Long adapter with clip.
6. Short adapter with clip.
7. Blind plug with fixing clip.

Possible modular manifold configuration

10 + 8 manifold with side inlet

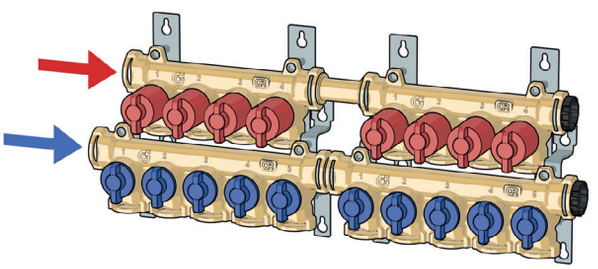

10 + 8 manifold with central inlet

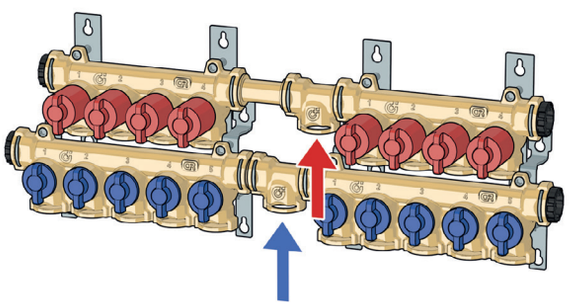

Standard distribution manifold with individual shut-off valves



354

Modular single distribution manifold with shut-off valves. Female flat seat connection. For press-fittings.

Maximum working pressure: 10 bar
Medium temperature range: 5–100 °C
Outlet centre distance: 35 mm
Material: brass

Code	Connection 1	Connection 2	Outlet connection		
354252	3/4″ F	3/4″ M	1/2″ M, Ø 13 - 2 out.	2	30
354253	3/4″ F	3/4″ M	1/2″ M, Ø 13 - 3 out.	2	20
354254	3/4″ F	3/4″ M	1/2″ M, Ø 13 - 4 out.	2	10
354255	3/4″ F	3/4″ M	1/2″ M, Ø 13 - 5 out.	2	10



354

Modular single distribution manifold with shut-off valves.

Maximum working pressure: 10 bar
Medium temperature range: 5–100 °C
Outlet centre distance: 35 mm
Material: dezincification resistant brass DR

Code	Connection 1	Connection 2	Outlet connection		
354052	3/4″ F	3/4″ M	23 p. 1,5 M - 2 out.	5	20
354053	3/4″ F	3/4″ M	23 p. 1,5 M - 3 out.	5	20
354054	3/4″ F	3/4″ M	23 p. 1,5 M - 4 out.	5	20
354055	3/4″ F	3/4″ M	23 p. 1,5 M - 5 out.	5	20

Accessories for standard manifold



360

Pair of stainless steel mounting brackets for distribution manifolds 354 series.
For plastic inspection boxes 360 and 362 series.

Code		
360210	1	10



3642

End fitting for air vent connection.
For distribution manifolds 356 and 357 series.

Code	Connection 1	Connection 2		
364254	3/4″ M	1/2″ F	2	-



3641

Plug.
For distribution manifolds 356 and 357 series.

Code	Connection		
364150	3/4″ M	2	-



5991

End fitting.
For distribution manifolds 349, 350, 592, 650 and 663 series.

Code	Connection 1	Connection 2		
599154	3/4″ F	1/2″ F	2	-



5993

Plug.
For distribution manifolds 349, 350, 592, 650 and 663 series.

Code	Connection		
599350	3/4″ F	2	10

COMPONENTS FOR DOMESTIC WATER SYSTEMS



Diagrams made with BIM families: ***bim.caleffi.com***

Inspectable strainer with shut-off function
Electrolytic anti-scale device with filter and magnet
Expansion groups for hot water storage heaters
Safety groups for hot water storage heaters
Temperature and pressure relief valves
Expansion vessels for domestic water systems
Flow limiter
Water hammer arrester
Anti-freeze safety devices
Vacuum breaker device
Standard ball valves with built-in check valves

STRAINERS

Inspectable strainer with shut-off valve



5771
FILTERSTOP

Inspectable strainer with shut-off function.
HEATING SYSTEMS APPLICATION:
Maximum working pressure: 10 bar
Medium temperature range: 0–90 °C
Maximum percentage of glycol: 30 %
Medium: water, glycol solutions
DOMESTIC WATER SYSTEMS APPLICATION:
Maximum working pressure: 16 bar
Medium temperature range: 5–40 °C
PATENT PENDING

Code	Connection	Strainer mesh size ∅ (mm)	Kv (m^3/h)		
577105	3/4″F	0,16	7,2	1	12
577106	1″F	0,16	7,2	1	12

Operation

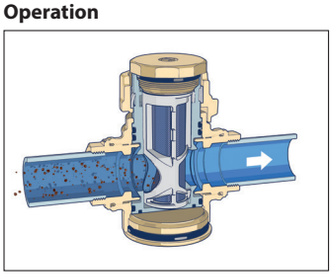

Mesh extraction

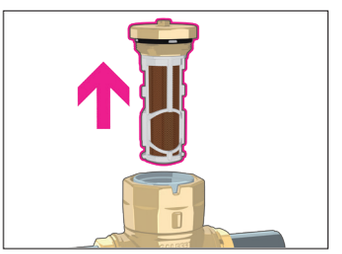

Housing and strainer cartridges



5370

Housing for strainer cartridges of standard nominal size 10″.
Transparent cup.

Maximum working pressure: 16 bar
Medium temperature range: 5–40 °C
Material: brass

Code	Connection		
537050	3/4″F	1	-
537060	1″F	1	-



5370

Strainer cartridges for housing 5370 series.
537004 - washable nylon mesh - 60 µm.
537005 - stainless steel mesh - 50 µm.

Medium temperature range: 5–40 °C
△p max.: 3 bar

Code	Notes		
537004	washable nylon mesh - 60 µm	1	-
537005	stainless steel mesh - 50 µm	1	-

ANTI-SCALE DEVICES

Electrolytic anti-scale device with filter and magnet



5377
CALEFFI eCAL®

Electrolytic anti-scale device with filter and magnet.
Complete with disassembly key.
PATENT PENDING

Maximum working pressure: 16 bar
Medium temperature range: 5–40 °C
Strainer mesh size Ø: 0,05 mm
Material: dezincification resistant brass DR "low lead"

Code	Connection	Kv (m^3/h)		
537761	1″F	5,1	1	-



5377
CALEFFI eCAL®

Spare self-contained cartridge for 5377 series.

Code		
F0002304	1	-

Characteristic components

1. Body
2. Outer protection cover
3. Internal elements
4. Filter
5. Transparent filter container
6. Magnet
7. Pressure drain plug

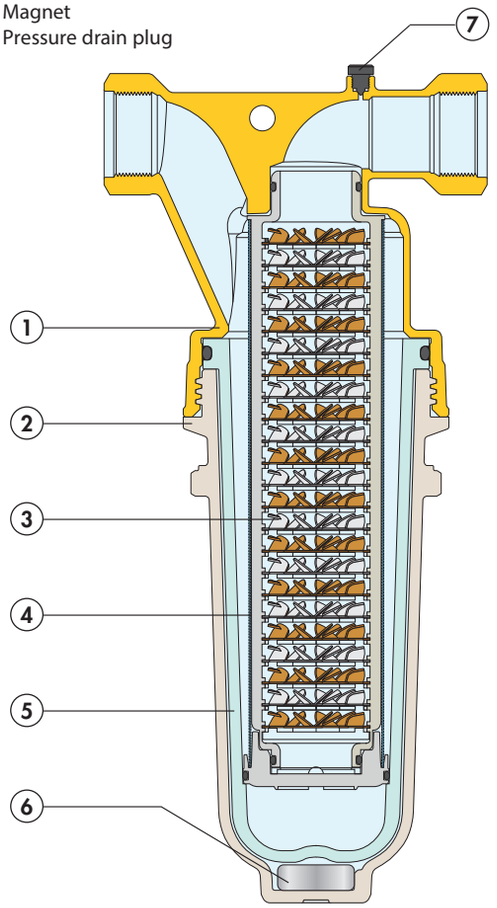

Application diagrams

Instantaneous DHW production system

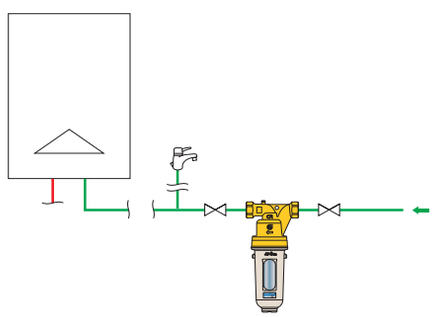

System with DHW storage

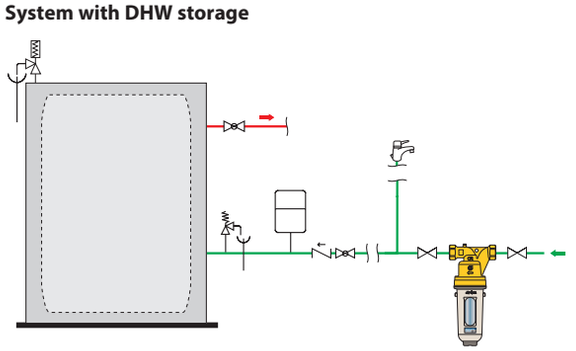

Operating principle

Device operation is divided into three phases:

1) The water enters the device and passes through the filter mesh, which retains the impurities by mechanically selecting the particles according to their size. The large filter mesh surface with a mesh size of 50 µm makes the device less prone to clogging.

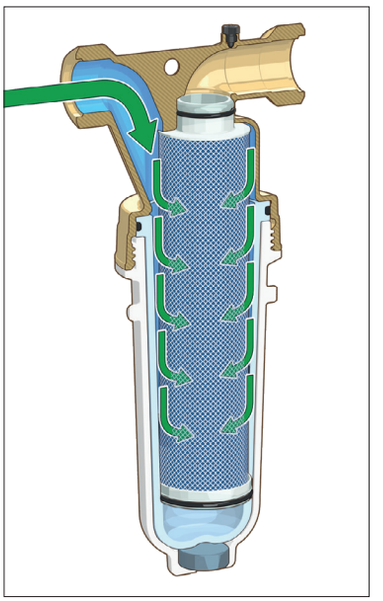

2) The water is channelled towards to bottom of the device, where the magnet is located. The magnet, which does not come into direct contact with the water, captures and retains the ferromagnetic impurities and helps to improve the efficiency of the device. The flow is reversed at the bottom and all the water is therefore channelled into the cartridge.

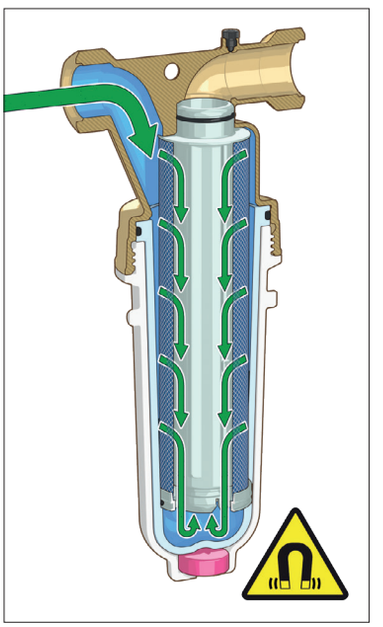

3) The water passes through the centre of the cartridge and comes into contact with the internal elements (Cu alloy - Zn/Ti), where the battery effect and vortex effect cause the first aragonite crystals to form.

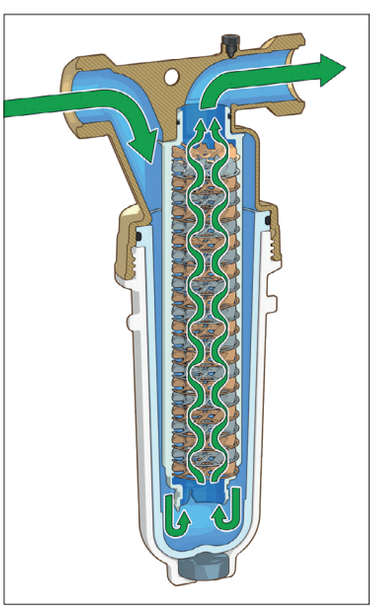

SAFETY GROUPS FOR DOMESTIC WATER SYSTEMS

Expansion groups for hot water storage heaters

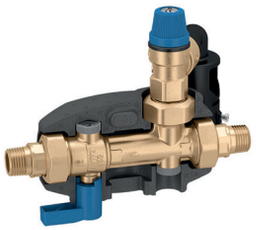

5280 SICAL®

Expansion group for hot water storage heaters, for horizontal or vertical installation.
With shut-off cock and controllable check valve.
Max. volume of domestic water storage: 200 l.
Max. power of domestic water storage: 75 kW.
With insulation.
Certified to EN 1488.

Maximum working pressure: 10 bar
Medium temperature range: 2–40 °C
Material: brass

Code	Connection	Pressure setting (bar)		
528046	1/2″ M	6	1	5
528048	1/2″ M	8	1	5
528041	1/2″ M	10	1	5
528056	3/4″ M	6	1	5
528058	3/4″ M	8	1	5
528051	3/4″ M	10	1	5

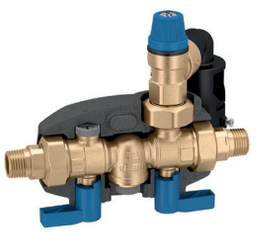

5281 SICAL®

Expansion group for hot water storage heaters, for horizontal or vertical installation.
With shut-off cock and controllable check valve.
Max. volume of domestic water storage: 1000 l.
Max. power of domestic water storage: 150 kW.
With insulation.
Certified to EN 1488.

Maximum working pressure: 10 bar
Medium temperature range: 2–40 °C
Material: brass

Code	Connection	Pressure setting (bar)		
528156	3/4″ M	6	1	5
528158	3/4″ M	8	1	5
528151	3/4″ M	10	1	5
528166	1″ M	6	1	5
528168	1″ M	8	1	5
528161	1″ M	10	1	5



528

Expansion group for hot water storage heaters, for horizontal or vertical installation.
With shut-off valve and controllable check valve.
Certified to EN 1488.

Maximum working pressure: 10 bar
Medium temperature range: 2–40 °C
Material: brass

Code	Connection	Pressure setting (bar)		
528518	Ø 15	8	1	20
528547	1/2″ M	7	1	20
528548	1/2″ M	8	1	20
528540	1/2″ M	10	1	20

Safety groups for hot water storage heaters



5261

Hydraulic safety group for hot water storage heaters, with shut-off valve and controllable check valve.
With stainless steel seat.
Certified to EN 1487.

Maximum working pressure: 10 bar
Medium temperature range: 2–120 °C
Pressure setting: 7 bar
Material: brass
Finish: chrome plated

Code	Inlet connection	Outlet connection	Maximum discharge rating (kW)		
526142	1/2″ M	1/2″ F	4	1	30
526152	3/4″ M	3/4″ F	10	1	30



5261

Hydraulic safety group for hot water storage heaters, with shut-off valve and controllable check valve.
Certified to EN 1487.

Maximum working pressure: 10 bar
Medium temperature range: 2–120 °C
Pressure setting: 7 bar
Material: brass
Finish: chrome plated

Code	Inlet connection	Outlet connection	Maximum discharge rating (kW)		
526140	3/4″ M	1/2″ F	4	1	30
526150	3/4″ M	3/4″ F	10	1	30



319

Plastic discharge tundish.
For safety units 5261 series.

Code	Connection		
319601	1″F	1	30



5261

Hydraulic safety group for hot water storage heaters, with shut-off valve and controllable check valve. For horizontal installation.
With stainless steel seat.
Certified to EN 1487.

Maximum working pressure: 10 bar
Medium temperature range: 2–120 °C
Pressure setting: 7 bar
Material: brass

Code	Inlet connection	Outlet connection	Notes	Maximum discharge rating (kW)		
526153	3/4″M	3/4″F	-	10	1	10
526163	1″M	1″F	without HY mark	18	1	10

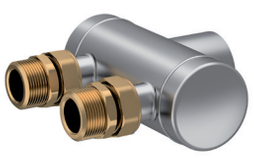

6509

Connection kit for unit code 526163.

Code	Inlet connection	Outlet connection		
650972	1 1/4″F	1″M	1	5



5261

Hydraulic safety group for hot water storage heaters, with shut-off valve and controllable check valve.
For horizontal installation, with standard seat.
Certified to EN 1487.

Maximum working pressure: 10 bar
Medium temperature range: 2–120 °C
Maximum discharge rating: 10 kW
Pressure setting: 7 bar
Material: brass
Finish: chrome plated

Code	Inlet connection	Outlet connection		
526151	3/4″M	3/4″F	1	10



5265

Safety group for hot water storage heaters, with shut-off valve and check valve.
Certified to EN 1487.

Maximum working pressure: 10 bar
Medium temperature range: 2–120 °C
Maximum discharge rating: 10 kW
Pressure setting: 7 bar
Material: brass

Code	Connection	DN		
526554	3/4″F	DN 20	1	30

SAFETY RELIEF VALVES FOR DOMESTIC WATER SYSTEMS

Temperature and pressure relief valves



309

Temperature and pressure relief valve.
For domestic water system, to protect the hot water storage

Certified to EN 1490 with settings: 4 - 7 - 10 bar.

Temperature setting: 90 °C
Material: dezincification resistant brass DR

CE 2797 WRAS APPROVED PRODUCT CERTIFICATION MARK

Code	Main connection	Drain connection	Pressure setting (bar)	Maximum discharge rating (kW)	Probe/ cable length (mm)		
309430	1/2" M	Ø 15	3	10	100	1	20
309440	1/2" M	Ø 15	4	10	100	1	20
309460	1/2" M	Ø 15	6	10	100	1	20
309470	1/2" M	Ø 15	7	10	100	1	20
309400	1/2" M	Ø 15	10	10	100	1	20
309542	3/4" M	Ø 15	4	10	100	1	20
309530	3/4" M	Ø 22	3	25	100	1	20
309560	3/4" M	Ø 22	6	25	100	1	20
309570	3/4" M	Ø 22	7	25	100	1	20
309500	3/4" M	Ø 22	10	25	100	1	20
309435	1/2" M	Ø 15	3	10	200	1	20
309445	1/2" M	Ø 15	4	10	200	1	20
309465	1/2" M	Ø 15	6	10	200	1	20
309475	1/2" M	Ø 15	7	10	200	1	20
309405	1/2" M	Ø 15	10	10	200	1	20
309547	3/4" M	Ø 15	4	10	200	1	20
309535	3/4" M	Ø 22	3	25	200	1	20
309565	3/4" M	Ø 22	6	25	200	1	20
309575	3/4" M	Ø 22	7	25	200	1	20
309505	3/4" M	Ø 22	10	25	200	1	20



309

Temperature and pressure relief valve.
For domestic water system, to protect the hot water storage.
For systems with nominal pressure of 400 kPa.

Temperature setting: 95 °C
Pressure setting: 6 bar
Material: dezincification resistant brass DR

SABS APPROVED SANS 198

Code	Main connection	Drain connection	Probe/cable length (mm)		
309563	3/4" M	Ø 22	100	1	20

CONTROL DEVICES FOR DOMESTIC WATER SYSTEMS

Expansion vessels for domestic water systems



5557

Welded expansion vessel, for hot water systems, EC certification.
Bladder diaphragm.
Conforms to EN 13831 standard.

Maximum working pressure: 10 bar
System working temperature range: -10–100 °C
Diaphragm temperature range: -10–100 °C

CE 1370

Code	Connection	Volume (l)	Pre-charge (bar)		
555702	1/2" M	2	2,5	4	-
555705	3/4" M	5	2,5	1	-
555708	3/4" M	8	2,5	1	-

Flow limiter



534

Flow limiter.

Maximum working pressure: 12 bar
Medium temperature range: 2–80 °C
Range △p: 1–10 bar
Material: brass

Code	Notes	Nominal flow rate (l/min)	Finish		
534102	M - F direction	2	olive green	1	-
534104	M - F direction	4	grey	1	-
534105	M - F direction	5	yellow	1	-
534106	M - F direction	6	black	1	-
534108	M - F direction	8	white	1	-
534110	M - F direction	10	light blue	1	-
534112	M - F direction	12	red	1	-
534116	M - F direction	16	blue	1	-
534118	M - F direction	18	lilac	1	-
534202	F - M direction	2	olive green	1	-
534204	F - M direction	4	grey	1	-
534205	F - M direction	5	yellow	1	-
534206	F - M direction	6	black	1	-
534208	F - M direction	8	white	1	-
534210	F - M direction	10	light blue	1	-
534212	F - M direction	12	red	1	-
534216	F - M direction	16	blue	1	-
534218	F - M direction	18	lilac	1	-

Water hammer arrester



525 ANTISHOCK

Water hammer arrester.
PTFE seal on thread.

Maximum working pressure: 10 bar
Medium temperature range: 2–90 °C
Material: brass

Code	Connection	Notes	Finish		
525040	1/2″ M	certified WRAS only	chrome plated	1	25
525041	1/2″ M	-	yellow brass	1	25



5251 ANTISHOCK

Water hammer arrester for fitting under sinks, wash-hand basins and washing machine (3/4″).

Maximum working pressure: 10 bar
Medium temperature range: 2–90 °C
Material: brass

Code	Connection	Notes	Finish		
525130	3/8″ F captive nut	certified WRAS only	chrome plated	1	50
525131	3/8″ F captive nut		yellow brass	1	50
525150	3/4″ F captive nut	certified WRAS only	chrome plated	1	25
525151	3/4″ F captive nut		yellow brass	1	25

Anti-freeze safety devices



603

Garden tap, ball type, **with anti-freeze safety device**.
Lever and fixing nut made of stainless steel.
Hose connection for Ø 15 mm pipe.
PATENT

Maximum working pressure: 10 bar
Ambient temperature range: -30–90 °C
Opening temperature: 3 °C
Closing temperature: 4 °C
Finish: chrome plated
Material: brass

Code	Pipe connection	Connection		
603450	1/2″ M	3/4″ M	1	10



603

Antifreeze group spare part.
For code 603450.

Finish: chrome plated

Code		
F89046/C	1	-

Vacuum breaker device



3040

Vacuum breaker device for domestic water systems.
For the protection of hot and cold water storage tanks.

Maximum working pressure: 14 bar
Medium temperature range: 0–120 °C
Material: dezincification resistant brass DR "low lead"

Code	Connection		
304040	1/2″ M	1	50
304050	3/4″ M	1	50

CHECK VALVES

Standard ball valves with built-in check valves



3230 BALLSTOP

Ball valve with built-in check valve, female connections.
Butterfly handle.

Maximum working pressure: 16 bar
Medium temperature range: 5–90 °C
Material: brass

Code	Connection		
323040	1/2″ F	10	-
323050	3/4″ F	10	-
323062	1″ F	4	-



3230 BALLSTOP

Ball valve with built-in check valve, female connections.
Lever handle.

Maximum working pressure: 16 bar
Medium temperature range: 5–90 °C
Material: brass

Code	Connection		
323060	1″ F	4	-
323070	1 1/4″ F	4	-
323080	1 1/2″ F	2	-
323090	2″ F	1	-



332 BALLSTOP

Ball valve with built-in check valve, male - female connections.
Butterfly handle.

Maximum working pressure: 16 bar
Medium temperature range: 5–90 °C
Material: brass

Code	Inlet connection	Outlet connection		
332400	1/2″ M	1/2″ F	10	-



333 BALLSTOP

Ball valve with built-in check valve, female - captive nut connection.
Drilled anti-tamper safety nut, butterfly handle.

Maximum working pressure: 16 bar
Medium temperature range: 5–90 °C
Material: brass

Code	Inlet connection	Outlet connection		
333400	1/2″ F	3/4″ F captive nut	10	-
333500	3/4″ F	3/4″ F captive nut	10	-



334 BALLSTOP

Ball valve with built-in check valve, male - captive nut connection.
Drilled anti-tamper safety nut, butterfly handle.

Maximum working pressure: 16 bar
Medium temperature range: 5–90 °C
Material: brass

Code	Inlet connection	Outlet connection		
334400	1/2″ M	3/4″ F captive nut	10	-
334500	3/4″ M	3/4″ F captive nut	10	-

BACKFLOW PREVENTION DEVICES

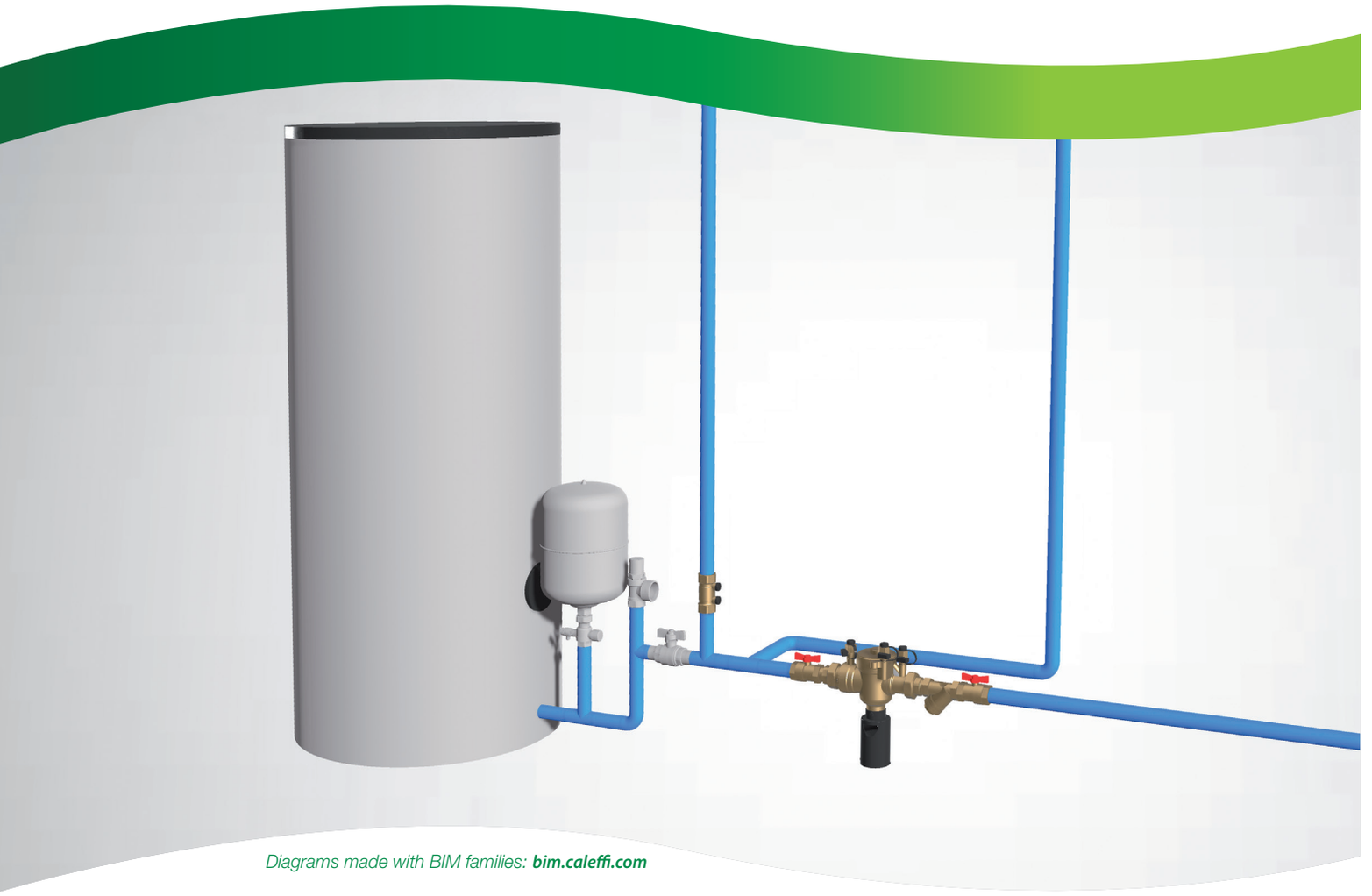

Diagrams made with BIM families: ***bim.caleffi.com***

Backflow prevention devices
Strainers
Check valves

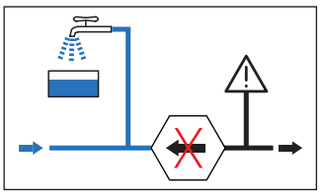

The following pages are extracted from the specific Monographic Guide, which concerns the problem of pollution of water supplies from backflow and presents the range of Caleffi products specifically designed to prevent this problem.
The materials of the components and their performance characteristics meet the specific regulatory and safety requirements of water supply systems.

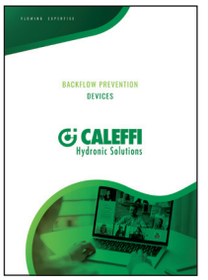

POLLUTION OF WATER SUPPLIES - NORMATIVE REFERENCES

Pollution is defined as any relative degradation of the quality of potable water.
European standard **EN 1717:2000** "*Protection against pollution of potable water in water installations and general requirements of devices to prevent pollution by backflow*" is the reference point as regards the prevention of pollution of public water supplies caused the backflow of fluid from private systems downstream.

The above standard is applied in conjunction with **EN 806:2012** "*Specifications for installations inside buildings conveying water for human consumption.*" that indicates the requirements for design, operation and maintenance.
Both these European reference standards should be applied in conjunction with the applicable national standards and regulations.
Installations must be designed and maintained in such a way that they do not cause pollution of the public water supply or of the internal system by backflow of any type of substance considered hazardous.

The standard EN 1717 classifies fluids contained in installations into five categories according to the degree of risk they pose to human health; these categories range from 1, with no human health hazard, to 5, the most hazardous.

Category 1:
Water to be used for human consumption coming directly from a potable water distribution system.

Category 2:
Fluid presenting no human health hazard, as per 1, the quality of which can have undergone a change in taste, odour, colour or temperature.

Category 3:
Fluid representing some human health hazard due to the presence of one or more harmful substances.

Category 4:
Fluid presenting a human health hazard due to the presence of one or more "toxic" or "very toxic" substances or one or more radioactive, mutagenic or carcinogenic substances.

Category 5:
Fluid presenting a human health hazard due to the presence of microbiological or viral elements.

According to this classification, suitable backflow prevention devices must be fitted in water distribution circuits.

EN 1717 lists the operating principle and minimum requirements of devices designed to protect the public water supply from the backflow of fluids belonging to one of these five categories.

Protection devices are grouped in eight Families, identified by the letters A, B, C, D, E, G, H, L, each of which may have one or more variants called Types, also identified with the letters A, B, C, or D. EN 1717 specifies for each Type of device the minimum and maximum fluid category and the conditions in which it may be used for to protect the installation against backflow.

The sequence of appliances, including protection device, filters, check valves, shut-off valves, pressure test ports, air gaps, etc. that together comprise the backflow protection, is defined as the **Protection Unit**.
The Protection Point is defined as the point in the system in which the Protection Unit is applied.

The generic symbol used in EN 1717 to identify the Protection Unit is a hexagon containing the letters indicating the protection Family and Type, as shown in the following figure:



Here below are some examples of Protection Units with the relative sequences of devices required by EN 1717.

Protection unit: Family B, Type A

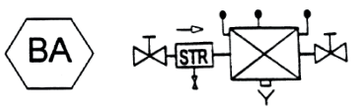

Protection unit: Family C, Type Aa

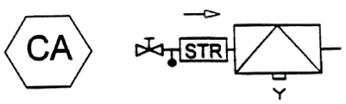

Protection unit: Family E, Type A

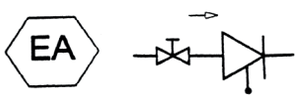

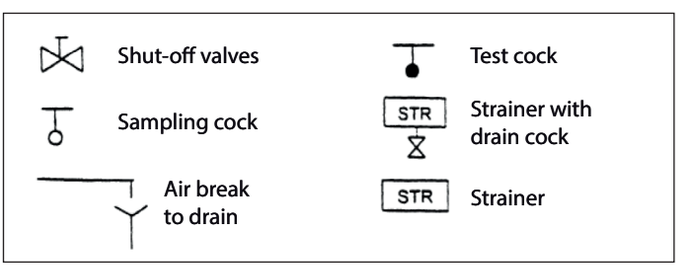

The indications in EN 1717 may be applied to all domestic, industrial/commercial and non domestic installations connected to the public potable water supply:

- domestic installations in residential or similar buildings, such as homes, hotels, schools, offices, hostels, etc.: kitchen sinks, hand basins, baths, showers, WCs, domestic hot water systems, domestic washing machines and dishwashers, garden irrigation systems, systems with low concentrations of additives that are not harmful to human health,such as water treatment, conditioning systems, etc.;
- in industrial and commercial installations the standard applies to all applications of potable water with similar use to a domestic installation, excluding therefore process water; also fire fighting, centralised heating or irrigation systems;
- non domestic installations for professional uses of water, for example, industries, commerce, agriculture, clinics, public and private swimming pools and thermal baths.

POLLUTION OF WATER SUPPLIES - NORMATIVE REFERENCES

Backflow
Potable water from the mains supply may be subject to pollution caused mainly by the contaminated fluids flowing back from plumbing installations connected directly to the mains supply. Backflow can be attributed to a variation in the pressure difference that causes a consequent inversion of the normal direction of flow at certain point of the installation. This phenomenon, termed “backflow”, occurs when:
a) the pressure in the mains system is less than that in the plumbing circuit receiving the supply (back syphonage). This situation can occur, for example, due to a break in the pipework of the mains supply and the consequent maintenance work, or when significant quantities of water are drawn by other users connected upstream, such as fire-fighting systems.
b) the pressure in the plumbing circuit receiving the supply rises (back pressure) due, for example, to water being pumped from a well.

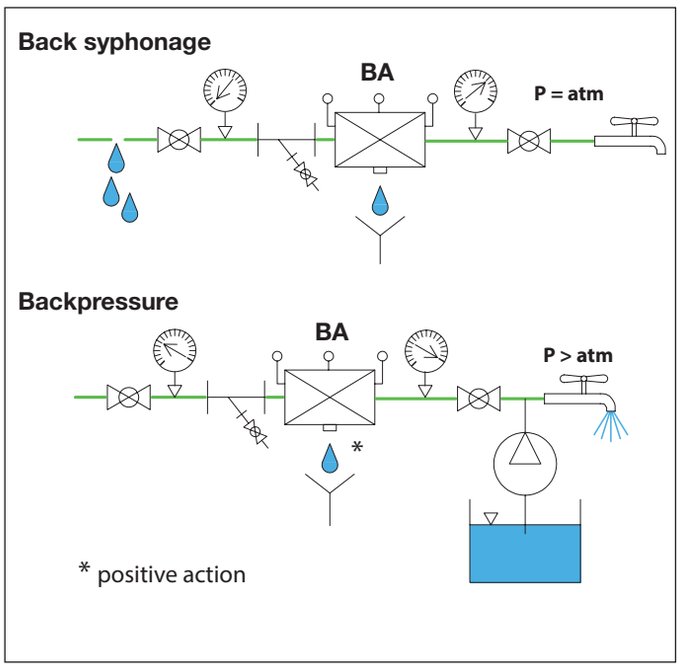

Risk assessment
Given the potential dangers of the phenomenon and the requirements of current regulations, the risk of pollution caused by backflow must be assessed on the basis of the type of system and the characteristics of the fluid that flows inside it.

A suitable backflow prevention device must be selected on the basis of the assessment performed by the system designer and the mains supplier. The device must be located along the supply line at the points at risk of backflow which would be hazardous to human health.

In addition to consultation of the European standard EN 1717, it is always necessary to consult the water supplier and the specific national regulations as, depending the type of installation, there may be more restrictive or more permissive derogations from the European standard.

In situations where there are fluids present that pose different degrees of hazard, backflow prevention should consider the most hazardous of these fluids. In the case of fluids that are exceptionally hazardous, it will be necessary to assess additional technical parameters.

In the case of applications where it is not possible to verify the risk level, it is necessary to hypothesise the greatest risk. The “Protection Matrix” tables reported in the list Monographic Guide various types of installation and the corresponding fluid categories.

Protection Unit - Product standards - Caleffi devices
Tables 1 and 2 below list all the Protection Units defined in EN 1717, with the relative fluid categories, the product standards and the corresponding products in the Caleffi catalogue.

Table 2

Devices	Category	Authorised level of the Protection Unit
Tap with spray outlet over handbasins, sinks, showers, baths; excluding WCs and bidets	5	Protection unit for category 2 and EB, ED, HC
Tub with water inlet below the rim of the tub (b)	5	Protection unit for category 3
Draw-off tap for hose connection (a b)	5	Protection unit for category 3
Over ground or in-ground irrigation system (b)	5	Protection unit for category 4
(a) Used for washing, cleaning or garden irrigation (b) The Protection Unit must be installed above the maximum operating level		

Table 1

		Fluid category						
Family Type	EN 1717 Protection unit	1	2	3	4	5	Product standard	Caleffi series
BA	Backflow preventer with controllable reduced pressure zone	•	•	•	•	-	EN 12729	580, 574, 575
CA	Backflow preventer with different non controllable pressure zones	•	•	•	-	-	EN 14367	573
EA	Controllable anti-pollution check valves from DN 6 to DN 250	•	•	-	-	-	EN 13959	3045, 3046
EB	Non-controllable anti-pollution check valves from DN 6 to DN 250	■					EN 13959	3047
EC	Controllable anti-pollution double check valves from DN 6 to DN 250	•	•	-	-	-	EN 13959	
ED	Non-controllable anti-pollution double check valves from DN 6 to DN 250	■					EN 13959	

Units with atmospheric vent must not be installed in zones at risk of flooding (for example, AA, BA, CA, GA, GB...)
• Covers the risk - Does not cover the risk ■ Only for certain sanitary uses (see Table 2)

BACKFLOW PREVENTION DEVICES

CAb type backflow prevention devices



572

Non controllable backflow preventer with different pressure zones for wall mounted boilers.
CAb type.
Certified to EN 14367.

Medium temperature range: 5–40 °C
Nominal pressure: PN 10
Material: brass

Code	Connection		
572106	Ø 6 copper pipe connections	1	50

CAa type backflow prevention devices



573

Non controllable backflow preventer with different pressure zones.
CAa type.
Certified to EN 14367.

Medium temperature range: 5–65 °C
Nominal pressure: PN 10
Material: brass

Code	Connection		
573415	1/2″F	1	10
573515	3/4″F	1	10



573

Non controllable backflow preventer with different pressure zones. Normally closed model.
With threaded outlet.

Medium temperature range: 5–65 °C
Nominal pressure: PN 10
Material: brass

Code	Connection		
573405	1/2″F	1	20
573505	3/4″F	1	20

BA type backflow prevention devices



574

Controllable, reduced pressure zone backflow preventer, compact version.
Upstream of the backflow preventer is mandatory to install a strainer 577 series.
BA type.
Certified to EN 12729.

Differential operating pressure: 14 kPa
Medium temperature range: 5–65 °C
Nominal pressure: PN 10
Material: dezincification resistant brass DR "low lead"

Code	Connection		
574004	1/2″M	1	10



574

Controllable, reduced pressure zone backflow preventer, standard version.
Upstream of the backflow preventer is mandatory to install a strainer 577 series.
BA type.
Certified to EN 12729.

Differential operating pressure: 14 kPa
Medium temperature range: 5–65 °C
Nominal pressure: PN 10
Material: dezincification resistant brass DR "low lead"

Code	Connection		
574040	1/2″M	1	-
574050	3/4″M	1	-
574006	1″M	1	-

574



Controllable, reduced pressure zone backflow preventer, standard version.
Upstream of the backflow preventer is mandatory to install a strainer 577 series.
BA type.
Certified to EN 12729.

Differential operating pressure: 14 kPa
Medium temperature range: 5–65 °C
Nominal pressure: PN 10
Material: dezincification resistant brass DR "low lead"

Code	Connection		
574600	1" M	1	-
574700	1 1/4" M	1	-
574008	1 1/2" M	1	-

574



Controllable, reduced pressure zone backflow preventer, standard version.
Bronze body.
Upstream of the backflow preventer is mandatory to install a strainer 577 series.
BA type.
Certified to EN 12729.

Differential operating pressure: 14 kPa
Medium temperature range: 5–65 °C
Nominal pressure: PN 10
Material: bronze

Code	Connection		
574800	1 1/2" M	1	-
574900	2" M	1	-

575



Controllable, reduced pressure zone backflow preventer. Bronze body. Flanged connections.
To be coupled with flat counterflanges EN 1092-1.
Upstream of the backflow preventer is mandatory to install a strainer 577 series.
BA type.
Certified to EN 12729.

Differential operating pressure: 14 kPa
Medium temperature range: 5–65 °C
Nominal pressure: PN 10
Material: bronze

Code	Connection		
575005	DN 50 - PN 10	1	-
575006	DN 65 - PN 10	1	-
575008	DN 80 - PN 10	1	-
575010	DN 100 - PN 10	1	-

5751



Controllable, reduced pressure zone backflow preventer, standard version.
Flanged connections.
To be coupled with flat counterflanges EN 1092-1.
BA type.
Upstream of the backflow preventer is mandatory to install a strainer 579 series.
Certified to EN 12729.
Differential operating pressure: 14 kPa
Medium temperature range: 5–65 °C
Nominal pressure: PN 10
Material: cast iron
Finish: coated

Code	Connection		
575105	DN 50 - PN 10	1	-
575106	DN 65 - PN 10	1	-
575108	DN 80 - PN 10	1	-
575110	DN 100 - PN 10	1	-



575

Controllable, reduced pressure zone backflow preventer.
To be coupled with flat counterflanges EN 1092-1.
Upstream of the backflow preventer is mandatory to install a strainer 579 series.
BA type.
Certified to EN 12729.

Differential operating pressure: 14 kPa
Medium temperature range: 5–60 °C
Nominal pressure: PN 10
Material: cast iron
Finish: coated

Code	Connection		
575150	DN 150 - PN 16	1	-
575200	DN 200 - PN 16	1	-
575250	DN 250 - PN 16	1	-

Pre-assembled group with BA type backflow prevention device

570

Pre-assembled group, female connections.
Complete with:
- 574 series backflow preventer;
- 577 series strainer for backflow preventers;
- manual shut-off valves.

Medium temperature range: 5–65 °C
Nominal pressure: PN 10



Code	Connection		
570004	1/2″F	1	-
570005	3/4″F	1	-
570006	1″F	1	-
570007	1 1/4″F	1	-
570008	1 1/2″F	1	-
570009	2″F	1	-

570

Pre-assembled group, flanged connections.
To be coupled with flat counterflanges EN 1092-1.
Complete with:
- 5751 series backflow preventer;
- 579 series strainer for backflow preventers;
- manual shut-off valves.

Medium temperature range: 5–65 °C
Nominal pressure: PN 10



Code	Connection		
570050	DN 50 - PN 10	1	-
570060	DN 65 - PN 10	1	-
570080	DN 80 - PN 10	1	-
570100	DN 100 - PN 10	1	-

570

Pre-assembled group, flanged connections.
To be coupled with flat counterflanges EN 1092-1.
Complete with:
- 575 series backflow preventer;
- 579 series strainer for backflow preventers;
- manual shut-off valves.

Medium temperature range: 5–60 °C
Nominal pressure: PN 10



Code	Connection		
570150	DN 150 - PN 16	1	-
570200	DN 200 - PN 16	1	-
570250	DN 250 - PN 16	1	-

Spare parts for backflow prevention devices



Discharge device for backflow preventers 574 and 575 series.

Code	Article use		
59978	574004	1	-
59471	574040, 574050, 574006, 570004, 570005	1	-
59457	574600, 574700, 574008, 570006, 570007	1	-
59461	574800, 574900, 575005, 570008, 570009, 570050	1	-



Discharge valve seat for backflow preventers 574 and 575 series.

Code	Article use		
59472	574040, 574050, 574006, 570004, 570005	1	-
59458	574600, 574700, 574008, 570006, 570007	1	-
59462	574800, 574900, 575005, 575006, 570008, 570009, 570050, 570060, 575105, 575106	1	-



Upstream check valve for backflow preventers 574 and 575 series.

Code	Article use		
59977	574004	1	-
59973	574040, 574050, 570004, 570005	1	-
59469	574006	1	-
59455	574600, 574700, 574008, 570006, 570007	1	-
59459	574800, 574900, 575005, 570008, 570009, 570050	1	-



Downstream check valve for backflow preventers 574 and 575 series.

Code	Article use		
59979	574004	1	-
59470	574040, 574050, 574006, 570004, 570005	1	-
59456	574600, 574700, 570006, 570007	1	-
F0001636	574008	1	-
59460	574800, 574900, 575005, 570008, 570009, 570050	1	-



Discharge device for backflow preventer 575 series.

Code	Article use		
59625	575006, 570060, 575105, 575106	1	-
59629	575008, 575010, 570080, 570100, 575108, 575110	1	-



Discharge valve seat for backflow preventer 575 series.

Code	Article use		
59630	575008, 575010, 570080, 570100	1	-



Upstream check valve for backflow preventer 575 series.

Code	Article use		
59627	575006, 570060	1	-
59631	575008, 575010, 570080, 570100	1	-



Downstream check valve for backflow preventer 575 series.

Code	Article use		
59628	575006, 570060	1	-
59632	575008, 575010, 570080, 570100	1	-



Discharge valve seat.

Code	Article use	
F0002294	575108, 575110	1



Upstream check valve.

Code	Article use	
F0002296	575105, 575106	1



Upstream check valve.

Code	Article use	
F0002298	575108, 575110	1



Downstream check valve.

Code	Article use	
F0002299	575105, 575106	1



Downstream check valve.

Code	Article use	
F0002300	575108, 575110	1

BA type backflow prevention devices with cartridge



580

Backflow preventer with multifunction geometry. **BA type**. Threaded union connections.
Complete with inlet strainer.
For in-line, horizontal or vertical installation.
Certified to EN 12729.

Medium temperature range: 5–65 °C
Nominal pressure: PN 10
Material: dezincification resistant brass DR

Code	Connection	Notes	DN		
580004	1/2″ M	-	DN 15	1	5
580040	1/2″ M	DN 20 cartridge	DN 15	1	5
580050	3/4″ M	-	DN 20	1	5
580060	1″ M	-	DN 25	1	-
580070	1 1/4″ M	-	DN 32	1	-



580

Backflow preventer with multifunction geometry. **BA type**. Complete with connection fitting to the tap at the inlet and hose connection at the outlet.
Complete with strainer at the inlet.
For vertical installation.
Certified to EN 12729 and Beschluss 4/2007.

Medium temperature range: 5–65 °C
Nominal pressure: PN 10
Material: dezincification resistant brass DR

Code	Inlet connection	Outlet connection	DN		
580104	3/4″ F captive nut	3/4″ M	DN 15	1	5
580150	3/4″ F captive nut	3/4″ M	DN 20	1	5



580

Backflow preventer with multifunction geometry. **BA type**. Complete with isolating valve at the inlet and hose connection at the outlet.
For vertical installation.
Complete with strainer at the inlet.
Certified to EN 12729 and W570-3.

Medium temperature range: 5–65 °C
Nominal pressure: PN 10
Material: dezincification resistant brass DR

Code	Inlet connection	Outlet connection	Notes	DN		
580240	1/2″ M	3/4″ M	DN 20 cartridge	DN 15	1	5
580250	3/4″ M	3/4″ M	-	DN 20	1	5

STRAINERS

Threaded filters for domestic hot water/ heating systems

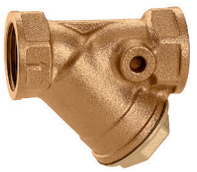

577

Y-strainer.
Filtering mesh in stainless steel AISI 304.

Medium temperature range: -20–110 °C
Maximum percentage of glycol: 30 %
Medium: water, glycol solutions
Material: bronze

Code	Connection	Strainer mesh size ⌀ (mm)	Kv (m^3/h)	PN		
577004	1/2″F	0,40	2,5	PN 16	1	
577005	3/4″F	0,40	3,9	PN 16	1	-
577006	1″F	0,40	7	PN 16	1	
577007	1 1/4″F	0,47	16	PN 16	1	
577008	1 1/2″F	0,47	24	PN 16	1	-
577009	2″F	0,53	35	PN 16	1	-
577020	2 1/2″F	0,53	57	PN 10	1	-
577030	3″F	0,53	73	PN 10	1	-

Flanged filters for domestic hot water systems



579

Y-strainer.
To be coupled with flat counterflanges EN 1092-1.
For backflow preventer 575 series and for pressure reducing valve 576 series.
Stainless steel mesh.
With drain cock.
Note (*): rhomboidal reinforcing mesh.

Maximum working pressure: 16 bar
Medium temperature range: 0–60 °C
Material: cast iron
Finish: coated

Code	Connection	Notes	Strainer mesh size ⌀ (mm)	Kv (m^3/h)		
579050	DN 50 - PN 16	-	1	28	1	-
579060	DN 65 - PN 16	-	1	37,2	1	-
579080	DN 80 - PN 16	-	1	62,2	1	-
579100	DN 100 - PN 16	-	1,6	149	1	-
579120	DN 125 - PN 16	(*)	1,6	320	1	-
579150	DN 150 - PN 16	(*)	1,6	367	1	-
579200	DN 200 - PN 16	(*)	1,6	652	1	-
579250	DN 250 - PN 16	(*)	2	844	1	-

CHECK VALVES

EA type check valves with built-in shut-off valve

324



Anti-pollution check valvewith built-in shut-off valve **EA type**.
Replaceable check valve cartridge.
Pressure test ports upstream and downstream.
Certified to EN 13959 e EN 13828.
PATENT PENDING

Maximum working pressure: 10 bar
Minimum check valve opening pressure: 0,5 kPa
Medium temperature range: 5–65 °C
Medium: domestic water
Material: dezincification resistant brass DR "low lead"

Code	Connection	DN		
324140	1/2" M	DN 20 (check valve)	1	10
324150	3/4" M	DN 20 (check valve)	1	10

324



Anti-pollution check valvewith built-in shut-off valve **EA type**.
Replaceable check valve cartridge.
Pressure test ports upstream and downstream.
Certified to EN 13959 e EN 13828.
PATENT PENDING

Maximum working pressure: 10 bar
Minimum check valve opening pressure: 0,5 kPa
Medium temperature range: 5–65 °C
Medium: domestic water
Material: dezincification resistant brass DR "low lead"

Code	Inlet connection	Outlet connection	DN		
324250	3/4" F	3/4" M	DN 20	1	10

324



Anti-pollution check valvewith built-in shut-off valve **EA type**.
Replaceable check valve cartridge.
Pressure test ports upstream and downstream.
Certified to EN 13959 e EN 13828.
PATENT PENDING

Maximum working pressure: 10 bar
Minimum check valve opening pressure: 0,5 kPa
Medium temperature range: 5–65 °C
Medium: domestic water
Material: dezincification resistant brass DR "low lead"

Code	Connection	DN		
324110	Ø 15	DN 20	1	10
324120	Ø 22	DN 20	1	10



Pressure gauge for 533H series inclined micro pressure reducing valves for special applications

and 539H combined group.

Code	Connection		
F0002665	1/4" M radial connection	1	-

Ball valves with built-in check valves



3230 BALLSTOP

Ball valve with built-in check valve, female connections.
Butterfly handle.

Maximum working pressure: 16 bar
Medium temperature range: 5–90 °C
Material: brass

Code	Connection		
323040	1/2″F	10	-
323050	3/4″F	10	-
323062	1″F	4	-



3230 BALLSTOP

Ball valve with built-in check valve, female connections.
Lever handle.

Maximum working pressure: 16 bar
Medium temperature range: 5–90 °C
Material: brass

Code	Connection		
323060	1″F	4	-
323070	1 1/4″F	4	-
323080	1 1/2″F	2	-
323090	2″F	1	-



332 BALLSTOP

Ball valve with built-in check valve, male - female connections.
Butterfly handle.

Maximum working pressure: 16 bar
Medium temperature range: 5–90 °C
Material: brass

Code	Inlet connection	Outlet connection		
332400	1/2″M	1/2″F	10	-



333 BALLSTOP

Ball valve with built-in check valve, female - captive nut connection.
Drilled anti-tamper safety nut, butterfly handle.

Maximum working pressure: 16 bar
Medium temperature range: 5–90 °C
Material: brass

Code	Inlet connection	Outlet connection		
333400	1/2″F	3/4″F captive nut	10	-
333500	3/4″F	3/4″F captive nut	10	-



334 BALLSTOP

Ball valve with built-in check valve, male - captive nut connection.
Drilled anti-tamper safety nut, butterfly handle.

Maximum working pressure: 16 bar
Medium temperature range: 5–90 °C
Material: brass

Code	Inlet connection	Outlet connection		
334400	1/2″M	3/4″F captive nut	10	-
334500	3/4″M	3/4″F captive nut	10	-

Single and double check valve



3037 ROBOCHECK-1

15 mm single check valve with compression ends.

Maximum working pressure: 10 bar
Medium temperature range: 2–90 °C
Material: dezincification resistant brass DR
Finish: chrome plated

WRAS APPROVED PRODUCT CERTIFICATION MARK

Code	Connection		
303715	Ø 15	10	100



3038 ROBOCHECK-2

15 mm controllable double check valve with compression ends.

Maximum working pressure: 10 bar
Medium temperature range: 2–90 °C
Material: dezincification resistant brass DR
Finish: chrome plated

WRAS APPROVED PRODUCT CERTIFICATION MARK

Code	Connection		
303815	Ø 15	5	100

EA type check valves



3045

Check valve, female connections.
EA type.
Controllable.
Certified to EN 13959.

Maximum working pressure: 10 bar
Medium temperature range: 5–65 °C
Material: brass

BELGAQUA

Code	Connection		
304540	1/2″ F	10	100
304550	3/4″ F	10	50
304560	1″ F	5	25
304570	1 1/4″ F	5	25
304580	1 1/2″ F	2	20
304590	2″ F	1	10



3046

Compact check valve, captive nut - male connections.
EA type.
Controllable.
Certified to EN 13959.

Maximum working pressure: 10 bar
Medium temperature range: 5–65 °C
Material: brass

BELGAQUA

Code	Inlet connection	Outlet connection	DN		
304601	3/4″ F captive nut	3/4″ M	DN 15 (check valve)	10	100



3046

Check valve, captive nut - male connections.
EA type.
Controllable.
Certified to EN 13959.

Maximum working pressure: 10 bar
Medium temperature range: 5–65 °C
Material: brass

Code	Inlet connection	Outlet connection	DN		
304640	3/4″ F captive nut	3/4″ M	DN 15 (check valve)	10	100
304650	1″ F captive nut	1″ M	DN 20 (check valve)	10	50
304660	1 1/4″ F captive nut	1 1/4″ M	DN 25 (check valve)	4	20
304670	1 1/2″ F captive nut	1 1/2″ M	DN 32 (check valve)	4	20
304680	2″ F captive nut	2″ M	DN 40 (check valve)	2	10



3046

Check valve, captive nut - male angled connections.
EA type.
Controllable.
Certified to EN 13959.

Maximum working pressure: 10 bar
Medium temperature range: 5–65 °C
Material: brass

Code	Inlet connection	Outlet connection	DN		
304644	3/4″ F captive nut	3/4″ M	DN 15 (check valve)	10	50
304654	1″ F captive nut	1″ M	DN 20 (check valve)	10	60



3046

Check valve, captive nut - male connections.
EA type.
Controllable.
Certified to EN 13959.

Maximum working pressure: 10 bar
Medium temperature range: 5–65 °C
Material: brass

Code	Inlet connection	Outlet connection	DN		
304645	3/4″ F captive nut	3/4″ M	DN 15	10	100

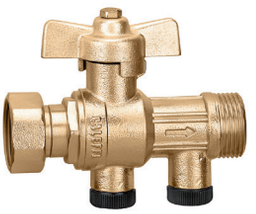

3041

Ball valve with built-in certified check valve, captive nut - male connections.
Controllable.

Maximum working pressure: 10 bar
Medium temperature range: 5–65 °C
Material: brass

Code	Inlet connection	Outlet connection	DN		
304140	3/4″ F	3/4″ M	DN 15	5	25

EB type check valves



3047

Check valve, female connections.
EB type.
Not controllable.

Maximum working pressure: 10 bar
Medium temperature range: 5–65 °C
Material: brass

Code	Connection		
304740	1/2″ F	10	100
304750	3/4″ F	10	50
304760	1″ F	5	25

Double check valve



3048

Double check valve, female connections.
Controllable.

Maximum working pressure: 10 bar
Medium temperature range: 5–65 °C
Material: brass

Code	Connection		
304840	1/2″ F	1	50
304850	3/4″ F	1	50

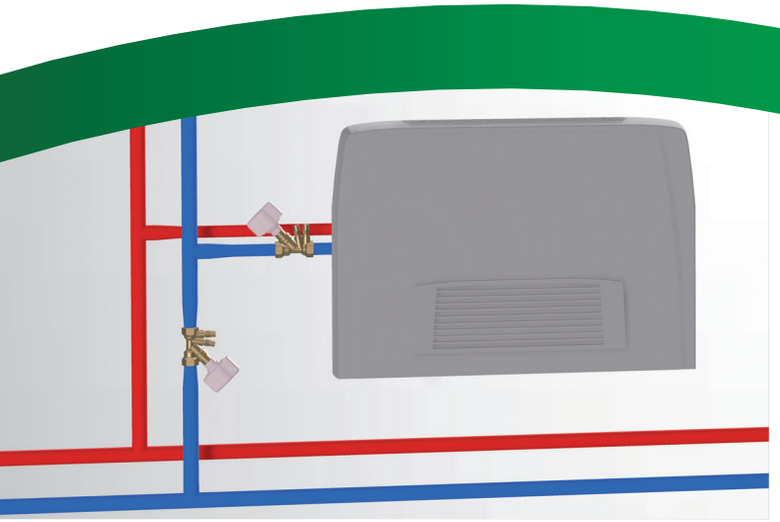

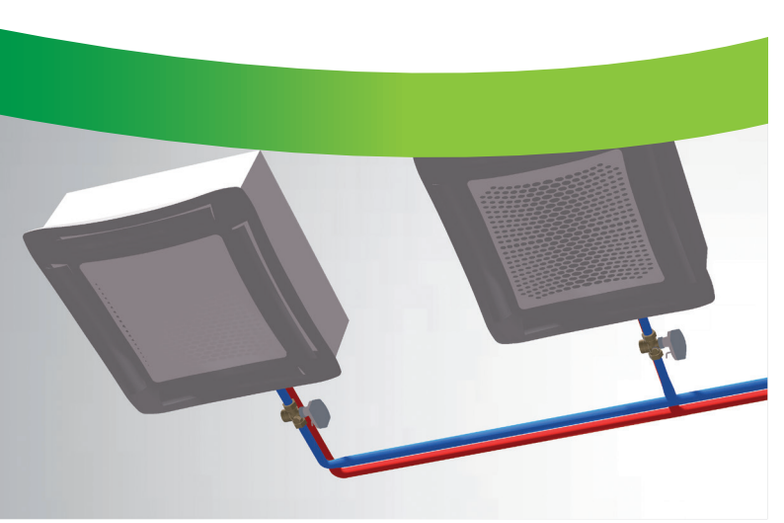

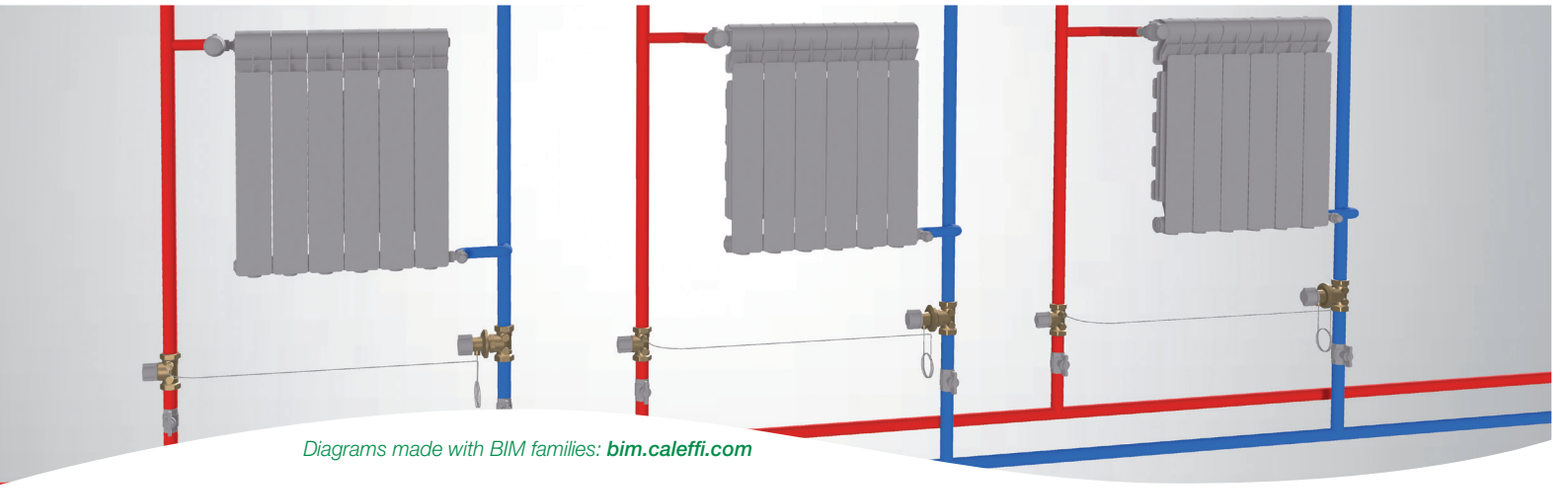

Diagrams made with BIM families: ***bim.caleffi.com***

Static balancing devices
Dynamic balancing and control devices
Automatic flow rate regulator (AUTOFLOW®)
Differential pressure control devices
Regulating globe valves
Butterfly valves
Regulating mixing valves

BALANCING AND CONTROL DEVICES

Circuit balancing devices can be classified in accordance with their method of action and the type of control they perform in relation to the hydronic circuit.

Static balancing devices

- Manual balancing valve, with Venturi device	**130 series**
- Manual balancing valve, with variable orifice	**130 series**
- Balancing valve with flow meter	**132 series**

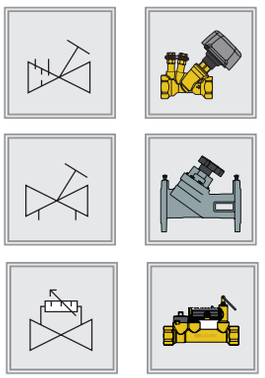

Dynamic balancing and control devices

- Connection and regulation kit for HVAC terminal units	**149 series**
- Pressure independent control valve (PICV)	**145-146 series**
- Automatic flow rate regulator, fixed flow rate	**127-128-121-126-120-125-103 series**

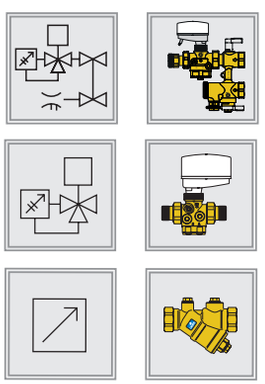

Differential pressure control devices

- Differential pressure control valve	**140 series**
- Shut-off and pre-regulation valve	**142 series**
- Differential by-pass valve	**519 series**

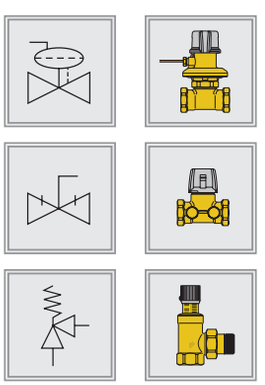

Regulating valves

- Regulating valves	**636 series**
- Temperature regulating valves	**610-611-612 series**

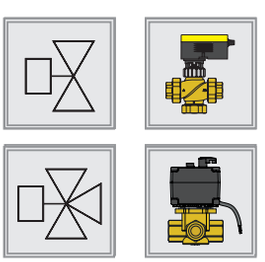

STATIC BALANCING DEVICES

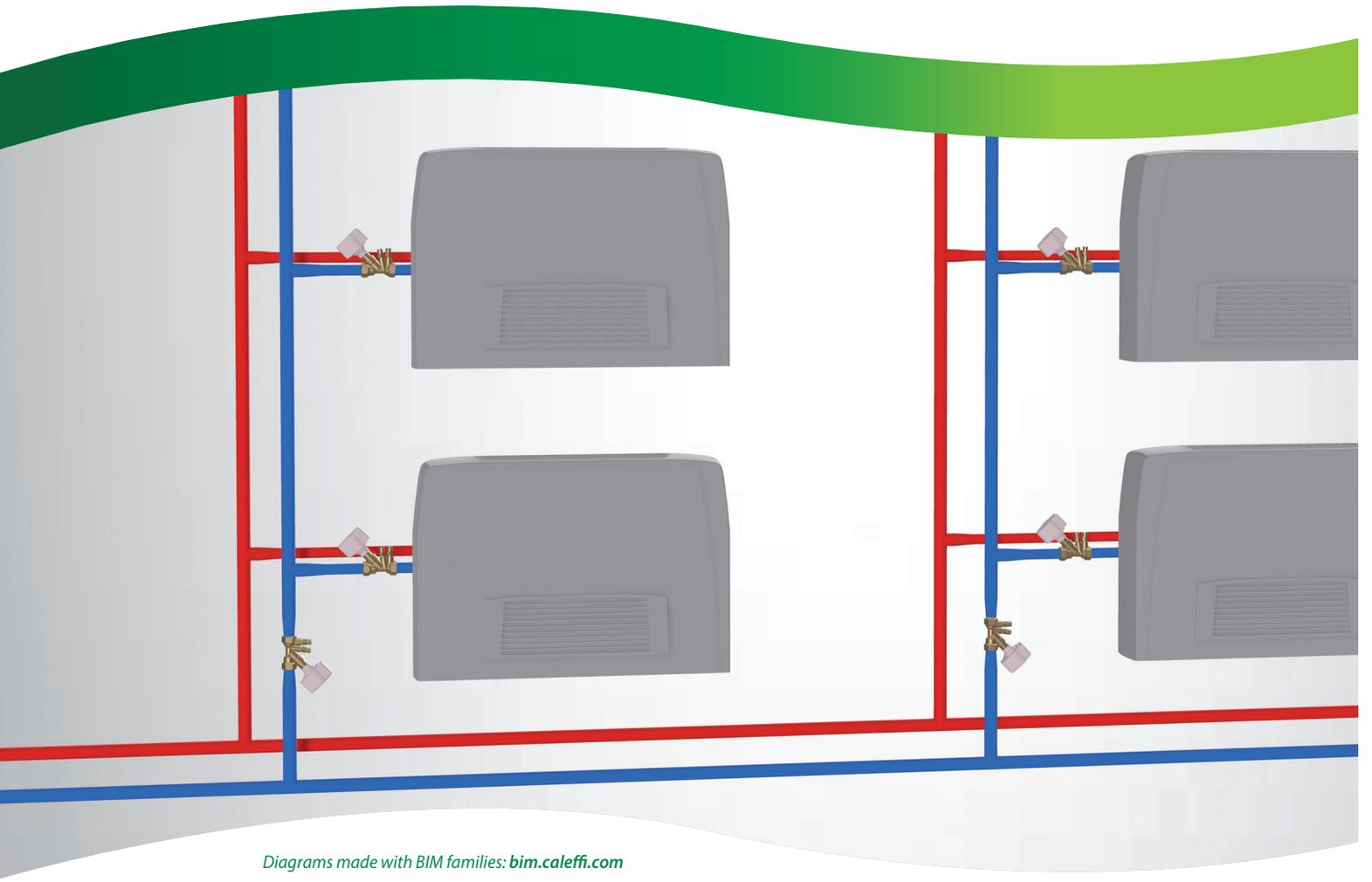

Diagrams made with BIM families: ***bim.caleffi.com***

Balancing valves
Measurement and control
Balancing valves with flow meter

STATIC BALANCING DEVICES

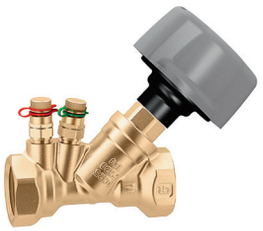

130

Balancing valve for hydraulic systems.
Flow meter with Venturi device.
Stainless steel obturator.
Complete with quick-fit pressure test ports.

Maximum working pressure: 16 bar
Medium temperature range: -20–120 °C
Maximum percentage of glycol: 50 %
Medium: water, glycol solutions
Material: dezincification resistant brass DR

WRAS APPROVED MATERIAL CERTIFICATION MARK

Code	Connection	Notes		
130401	1/2″F	Low flow	1	5
130400	1/2″F	-	1	5
130500	3/4″F	-	1	5
130600	1″F	-	1	5
130700	1 1/4″F	-	1	5
130800	1 1/2″F	-	1	5
130900	2″F	-	1	5



130

Pre-formed insulation for balancing valves with threaded connections 130 series.

Code	Notes		
CBN130400	1/2″	1	-
CBN130500	3/4″	1	-
CBN130600	1″	1	-
CBN130700	1 1/4″	1	-
CBN130800	1 1/2″	1	-
CBN130900	2″	1	-



142

Balancing valve.

Maximum working pressure: 16 bar
Medium temperature range: -10–120 °C
Maximum percentage of glycol: 50 %
Medium: glycol solutions
Material: dezincification resistant brass DR

Code	Connection		
142340	1/2″F	10	-
142345	1/2″F	10	-
142350	3/4″F	10	-



130

Balancing valve for hydraulic systems.
Complete with quick-fit pressure test ports.
To be coupled with flat counterflanges EN 1092-1.

Maximum working pressure: 16 bar
Medium temperature range: -10–120 °C
Material: cast iron
Medium: water, glycol solutions
Maximum percentage of glycol: 50 %

Code	Connection		
130063	DN 65 - PN 16	1	-
130083	DN 80 - PN 16	1	-
130103	DN 100 - PN 16	1	-
130123	DN 125 - PN 16	1	-
130153	DN 150 - PN 16	1	-
130203	DN 200 - PN 16	1	-
130253	DN 250 - PN 16	1	-
130303	DN 300 - PN 16	1	-

Measurement and control

130

Electronic flow rate and differential pressure measuring station.
Supplied with shut-off valves and connection fittings.
Bluetooth® transmission between △p meter and remote control unit.
It can also be used to measure the flow rate of series 130 and 142 balancing valves, and the 149 unit.
Can be used for measuring △p on automatic flow rate regulators.
Versions complete with remote control unit with Android® application for Smartphone and Tablet.

Measurement range: 0–1000 kPa
Maximum working pressure (static): 1000 kPa
Electric supply: with battery



CE

Code	Notes		
130006	complete with remote control unit, with Android® application	1	-
130005	without remote control unit, with Android® application	1	-

Smart Balancing Caleffi
Available app for smartphones with Android 13 or previous.
Download for your Android® mobile phone.

Flex SBI
Available app for smartphones with versions above Android 13.
Download for your Android® mobile phone.

Balancing valves with flow meter



132

Balancing valve with flow meter and direct reading of flow rate.
Ball valve for flow rate adjustment.
Graduated scale flow meter with magnetic movement flow rate indicator.
With insulation.
PATENT

Maximum working pressure: 10 bar
Medium temperature range: -10–110 °C
Medium: water, glycol solutions
Maximum percentage of glycol: 50 %
Material: brass

Code	Connection	Flow rate regulation (l/min)		
132402	1/2″F	2–7	1	5
132512	3/4″F	5–13	1	5
132522	3/4″F	7–28	1	5
132602	1″F	10–40	1	5
132702	1 1/4″F	20–70	1	5
132802	1 1/2″F	30–120	1	5
132902	2″F	50–200	1	5



132

Balancing valve with flow meter and direct reading of flow rate.
Graduated scale flow meter with magnetic movement flow rate indicator.
Brass flow meter.
To be coupled with flat counterflanges EN 1092-1.
PATENT

Maximum working pressure: 10 bar
Medium temperature range: -10–110 °C
Maximum percentage of glycol: 50 %
Medium: water, glycol solutions
Material: cast iron

Code	Connection	Flow rate regulation (m^3/h)		
132060	DN 65 - PN 16	6–24	1	-
132080	DN 80 - PN 16	8–32	1	-
132100	DN 100 - PN 16	12–48	1	-

Flow rate adjustment

The flow rate is adjusted by carrying out the following operations:

1. With the aid of the indicator (1), mark the reference flow rate at which the valve has to be set.

2. Use the ring (2) to open the obturator that shuts off the flow of medium in the flow meter (3) under normal operating conditions.

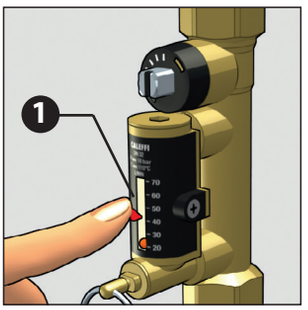

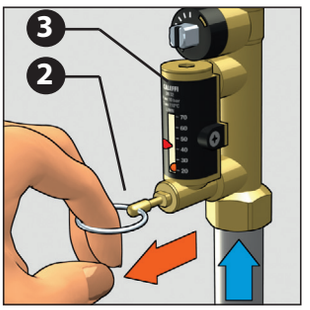

3. Keeping the obturator open, apply a wrench on the control stem of the valve (4) to adjust the flow rate. It is indicated by a metal ball (5) that runs inside a transparent guide (6) marked by a graduated scale in l/min.

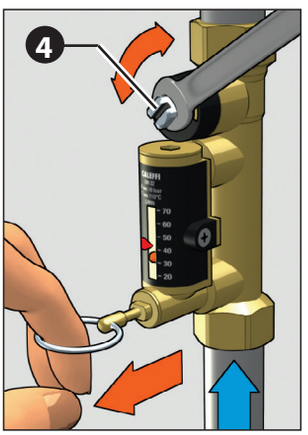

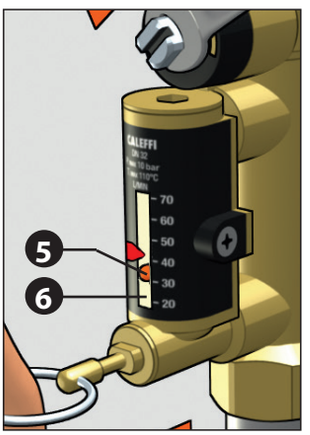

4. After completing the balancing, release the ring (2) of the flow meter obturator that, thanks to an internal spring, will automatically go back into the closed position.

5. After completing the balancing, the indicator (1) can be used to keep in memory the selected setting in case of future inspections.

Complete opening and closing of the valve

Complete opening of the valve

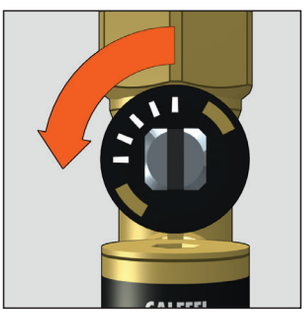

Complete closing of the valve

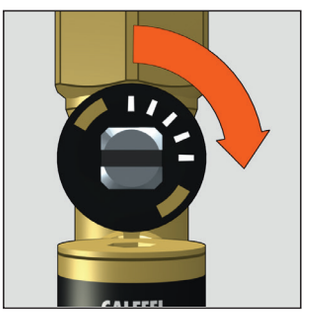

DYNAMIC BALANCING AND CONTROL DEVICES

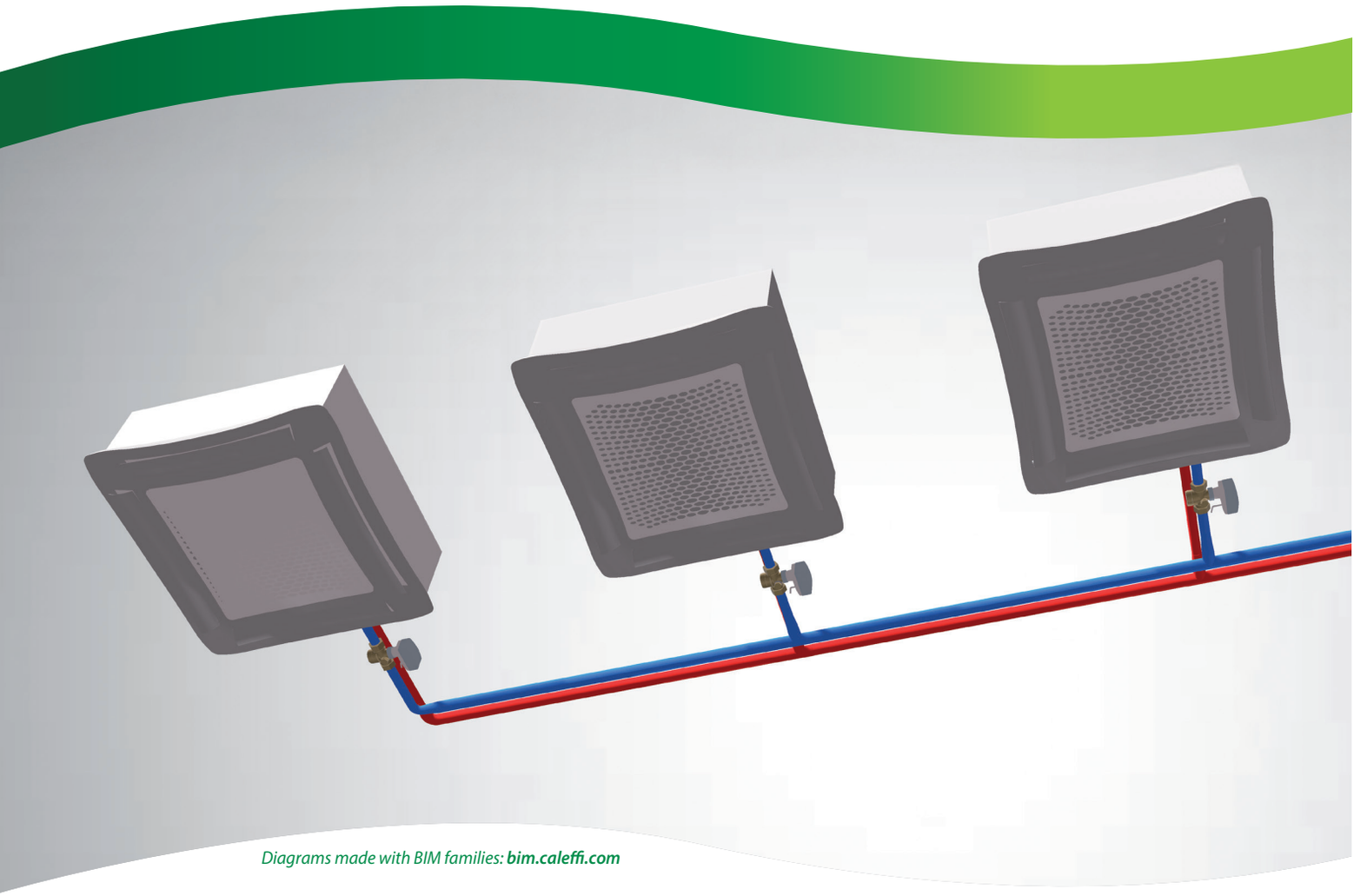

Diagrams made with BIM families: ***bim.caleffi.com***

Pressure independent control valves (PICV)
Cast iron pressure independent control valves (PICV)
Connection and regulation kit
Compact automatic flow rate regulator, in line
Compact automatic flow rate regulator
Automatic flow rate regulator
Automatic flow rate regulator and ball valve
Spare technopolymer cartridges, for 127 series
Spare technopolymer cartridges, for 128 series
Spare technopolymer cartridges, for 121 and 126 series
Automatic flow rate regulator with stainless steel cartridge and ball valve
Automatic flow rate regulator with stainless steel cartridge
Spare stainless steel cartridges
Spare stainless steel cartridges
Automatic flow regulator with stainless steel cartridge, flanged

DYNAMIC BALANCING AND CONTROL DEVICES

Pressure independent control valves (PICV)

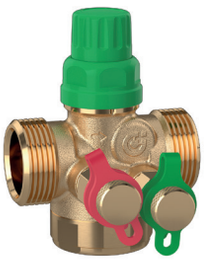

145 FLOWMATIC®

Pressure independent control valve.
Fitted for 145 series actuator and 6565/6566 series thermo-electric actuator.
Flow rate regulator in polymer with membrane in EPDM.
Graduated scale indicator.
With pressure test ports.

Maximum working pressure: 25 bar
Medium temperature range: -20–120 °C
Maximum percentage of glycol: 50 %
Medium: water, glycol solutions
Range △p: 25–400 kPa
Material: dezincification resistant brass DR

Code	Connection	DN	Flow rate regulation (m^3/h)		
145437 H20	1/2″ M	DN 15	0,02–0,20	1	10
145447 H40	3/4″ M	DN 15	0,08–0,40	1	10
145447 H80	3/4″ M	DN 15	0,08–0,80	1	10
145557 H40	1″ M	DN 20	0,08–0,40	1	10
145557 H80	1″ M	DN 20	0,08–0,80	1	10
145557 1H2	1″ M	DN 20	0,12–1,20	1	10
145667 1H8	1 1/4″ M	DN 25	0,18–1,80	1	10
145667 3H0	1 1/4″ M	DN 25	0,30–3,00	1	10
145667 3H7	1 1/4″ M	DN 25	0,37–3,70	1	10



145 FLOWMATIC®

Pressure independent control valve.
Fitted for 145 series actuator and 6565/6566 series thermo-electric actuator.
Flow rate regulator in polymer with membrane in EPDM. Graduated scale indicator.
Fitted for connection of pressure test ports.

Maximum working pressure: 25 bar
Medium temperature range: -20–120 °C
Maximum percentage of glycol: 50 %
Medium: water, glycol solutions
Range △p: 25–400 kPa
Material: dezincification resistant brass DR

Code	Connection	DN	Flow rate regulation (m^3/h)		
145434 H20	1/2″ M	DN 15	0,02–0,20	1	10
145444 H20	3/4″ M	DN 15	0,02–0,20	1	10
145444 H40	3/4″ M	DN 15	0,08–0,40	1	10
145444 H80	3/4″ M	DN 15	0,08–0,80	1	10
145554 H20	1″ M	DN 20	0,02–0,20	1	10
145554 H40	1″ M	DN 20	0,08–0,40	1	10
145554 H80	1″ M	DN 20	0,08–0,80	1	10
145554 1H2	1″ M	DN 20	0,12–1,20	1	10
145664 1H8	1 1/4″ M	DN 25	0,18–1,80	1	10
145664 3H0	1 1/4″ M	DN 25	0,30–3,00	1	10
145664 3H7	1 1/4″ M	DN 25	0,37–3,70	1	10



145

Union with gasket.

Code	Inlet connection	Outlet connection		
145001	1/2″ F	3/8″ M	1	-
145003	3/4″ F	1/2″ M	1	-
145005	1″ F	3/4″ M	1	-
145006	1″ F	1″ M	1	-
145007	1 1/4″ F	1″ M	1	-
145008	1 1/4″ F	1 1/4″ M	1	-



145

Insulation for FLOWMATIC® 145 series.
Used for DN 15 - DN 20.

Code	Notes		
CBN145437	for DN 15 - DN 20	1	-



145

Insulation for FLOWMATIC® 145 series.
Used for DN 25.

Code	Notes		
CBN145667	for DN 25	1	-

Operating principle

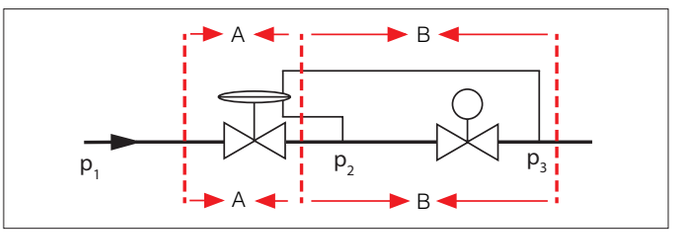

Where:
p_1 = upstream pressure
p_2 = intermediate pressure
p_3 = downstream pressure
(p_1 - p_3) = total valve Δ**p**

Connection and regulation kit

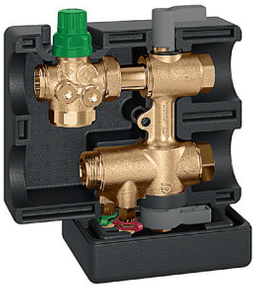

149

Connection and regulation kit for HVAC terminal units.
With Venturi device.
Complete with:
- pressure independent control valve;
- three-way shut-off valves;
- built-in by-pass;
- Venturi device;
- filter cartridge;
- pre-formed shell insulation;
- drain cock.

With insulation.
PATENT PENDING

Maximum working pressure: 25 bar
Medium temperature range: -10–120 °C
Main centre distance: 80 mm
Maximum percentage of glycol: 50 %
Medium: water, glycol solutions
Range △p: 25–400 kPa
Material: dezincification resistant brass DR

Code	DN	Kv Venturi (m^3/h)	Flow rate working range (m^3/h)		
149400 H10	DN 15	0,25	0,02–0,10	1	-
149400 H20	DN 15	0,50	0,10–0,20	1	-
149400 H40	DN 15	1,10	0,20–0,40	1	-
149400 H80	DN 15	2,35	0,40–0,80	1	-
149500 H10	DN 20	0,25	0,02–0,10	1	-
149500 H20	DN 20	0,50	0,10–0,20	1	-
149500 H40	DN 20	1,10	0,20–0,40	1	-
149500 H80	DN 20	2,35	0,40–0,80	1	-
149500 1H2	DN 20	5,00	0,80–1,20	1	-
149600 1H8	DN 25	5,00	1,20–1,80	1	-
149600 3H0	DN 25	9,60	1,80–3,00	1	-
149600 3H7	DN 25	9,60	1,85–3,70	1	-

Characteristics components

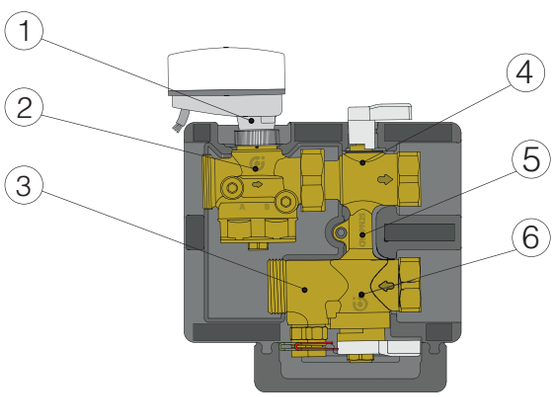

1. Actuator (optional)
2. Pressure independent control valve (PICV)
3. Venturi device for flow rate measurement with connections for pressure test ports (in 149.00 codes only)
4. Three-way shut-off valve
5. By-pass
6. Three-way shut-off valve with built-in strainer

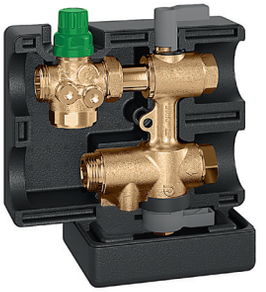

149

Connection and regulation kit for HVAC terminal units.
Complete with:
- pressure independent control valve;
- three-way shut-off valves;
- built-in by-pass;
- filter cartridge;
- pre-formed shell insulation;
- drain cock.

With insulation.
PATENT PENDING

Maximum working pressure: 25 bar
Medium temperature range: -10–120 °C
Main centre distance: 80 mm
Maximum percentage of glycol: 50 %
Medium: water, glycol solutions
Range △p: 25–400 kPa
Material: dezincification resistant brass DR

Code	DN	Flow rate working range (m^3/h)		
149410 H20	DN 15	0,02–0,20	1	-
149410 H40	DN 15	0,08–0,40	1	-
149410 H80	DN 15	0,08–0,80	1	-
149510 H20	DN 20	0,02–0,20	1	-
149510 H40	DN 20	0,08–0,40	1	-
149510 H80	DN 20	0,08–0,80	1	-
149510 1H2	DN 20	0,12–1,20	1	-
149610 1H8	DN 25	0,18–1,80	1	-
149610 3H0	DN 25	0,30–3,00	1	-
149610 3H7	DN 25	0,37–3,70	1	-



Optional drain cock for 149 series.

Code	Pipe connection	Connection	DN		
F0000680	3/4″ M	3/4″ F	DN 15	1	-
F0000681	1″ M	1″ F	DN 20	1	-
F0000682	1 1/4″ M	1 1/4″ F	DN 25	1	-

Can be combined with actuators code 145018, 145019 and 6565 series thermo-electric actuators.

Actuators for 145 FLOWMATIC and 149 series



145

Proportional linear actuator for FLOWMATIC® 145 series control valve and 149 series kit.

Ambient temperature range: 0–50 °C
Protection class: IP 54
Control signal: 0 (2)–10 V, 2 point, 3 point
Feedback signal: 0–10 V
Supply cable length: 1,5 m

CE

Code	Electric supply		
145019	24 V AC/DC	1	40



145

Proportional linear actuator for FLOWMATIC® 145 series control valve and 149 series kit, with **fail-safe function**.

Ambient temperature range: 0–50 °C
Protection class: IP 54
Control signal: 0 (2)–10 V, 2 point
Feedback signal: 0–10 V
Supply cable length: 1,5 m

CE

Code	Electric supply		
145018	24 V AC/DC	1	40



6565

Proportional thermo-electric actuator for FLOWMATIC 145 series control valve and 149 series kit.
Normally closed.
Quick-coupling installation, with a clip adapter.

Ambient temperature range: 0–60 °C
Running power consumption: 1,2 W
Protection class: IP 54
Control signal: 0–10 V
Feedback signal: 0–10 V
Supply cable length: 1 m

CE

Code	Electric supply		
656524	24 V AC/DC	1	100



6565

Thermo-electric actuator for FLOWMATIC 145 series control valve and 149 series kit.
Quick-coupling installation with fixing clip adaptor.
Normally closed.

Ambient temperature range: 0–60 °C
Running power consumption: 1 W
Protection class: IP 54
Supply cable length: 1 m
Control signal: ON/OFF

CE

Code	Electric supply		
656502	230 V AC	1	100
656504	24 V AC/DC	1	100



6566

Thermo-electric actuator.
For FLOWMATIC 145 series control valve,149 series kit, user modules 7002 and 7004 series.
Quick-coupling installation with fixing clip adaptor.
Normally open.

Ambient temperature range: 0–60 °C
Running power consumption: 1 W
Protection class: IP 54
Supply cable length: 1 m
Control signal: ON/OFF

CE

Code	Electric supply		
656602	230 V AC	1	100
656604	24 V AC/DC	1	100

Cast iron pressure independent control valves (PICV)



145

Pressure independent control valve.
Complete with pressure test ports.

Maximum working pressure: 25 bar
Medium temperature range: -10–120 °C
Maximum percentage of glycol: 50 %
Medium: water, glycol solutions
Range △p: 30–600 kPa
Material: cast iron

Code	Connection	DN	Flow rate working range (m^3/h)		
145895	2″M	DN 40	2,9–9,3	1	-
145905	2 1/2″M	DN 50	5,1–14,8	1	-

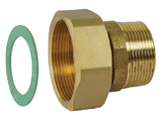

145

Flat seat union with gasket for cast iron 145 series.

Code	nut connection	tailpiece connection		
145009	2″F	1 1/2″M	1	-
145010	2 1/2″F	2″M	1	-



146

Manual actuator for 145895 and 145905 valves.

Code		
146001	1	-



145

Rotational proportional actuator for pressure independent control valve 145 series.
Manual override.

Ambient temperature range: -30–50 °C
Protection class: IP 54
Control signal: 2–10 V
Feedback signal: 2–10 V

CE

Code	Article use	Electric supply		
145017	145895, 145905	24 V AC/DC	1	-

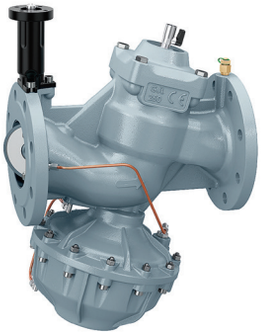

146

Pressure independent control valve.
To be coupled with flat counterflanges EN 1092-1.
Complete with pressure test ports.

Maximum working pressure: 16 bar
Medium temperature range: -10–120 °C
Maximum percentage of glycol: 50 %
Medium: glycol solutions
Range △p: 30–400 kPa
Material: cast iron

Code	Connection	Flow rate working range (m^3/h)		
146060	DN 65 - PN 16	6–26	1	-
146080	DN 80 - PN 16	8–36	1	-
146100	DN 100 - PN 16	16–82,5	1	-
146120	DN 125 - PN 16	20–125	1	-
146150	DN 150 - PN 16	27–160	1	-



146

Rotational proportional actuator for pressure independent control valve 146 series.
Manual override.

Ambient temperature range: -30–50 °C
Protection class: IP 54
Control signal: 2–10 V
Feedback signal: 2–10 V

CE

Code	Article use	Electric supply		
146025	146060, 146080, 146100, 146120, 146150	24 V AC/DC	1	-



146

Manual actuator for 146 series regulating valve.

Code	Article use		
146000	146060, 146080, 146100, 146120, 146150	1	-

AUTOMATIC FLOW RATE REGULATOR (AUTOFLOW®)

Compact automatic flow rate regulator, in line



127
AUTOFLOW®

Compact automatic flow rate regulator, in line, with high resistance tecnopolymer cartridge.
Flow rates: 0,02–0,06 m³/h - Δp range: 20–200 kPa - Accuracy: ± 15 %.
Flow rates: 0,085–11,0 m³/h - Δp range: 15–200 kPa - Accuracy: ± 10 %.
PATENT

Maximum working pressure: 16 bar
Medium temperature range: 0–100 °C
Medium: water, glycol solutions
Maximum percentage of glycol: 50 %
Material: brass

Code	Connection	Flow rates (m³/h)		
127141***	1/2″ F	0,02; 0,04; 0,06; 0,085; 0,12; 0,15; 0,2; 0,25; 0,3; 0,35; 0,4; 0,5; 0,6; 0,7; 0,8; 0,9; 1,0; 1,2; 1,4	1	-
127151***	3/4″ F	0,02; 0,04; 0,06; 0,085; 0,12; 0,15; 0,2; 0,25; 0,3; 0,35; 0,4; 0,5; 0,6; 0,7; 0,8; 0,9; 1,0; 1,2; 1,4; 1,6	1	-
127161***	1″ F	0,5; 0,6; 0,7; 0,8; 0,9; 1,0; 1,2; 1,4; 1,6; 1,8; 2,0; 2,25; 2,5; 2,75; 3,0; 3,25; 3,5; 3,75; 4,0; 4,25; 4,5; 4,75; 5,0	1	-
127171***	1 1/4″ F	0,5; 0,6; 0,7; 0,8; 0,9; 1,0; 1, ; 1,4; 1,6; 1,8; 2,0; 2,25; 2,5; 2,75; 3,0; 3,25; 3,5; 3,75; 4,0; 4,25; 4,5; 4,75; 5,0	1	-
127181***	1 1/2″ F	4,5; 4,75; 5,0; 5,5; 6,0; 6,5; 7,0; 7,5; 8,0; 8,5; 9,0; 9,5; 10,0; 11,0	1	-
127191***	2″ F	4,5; 4,75; 5,0; 5,5; 6,0; 6,5; 7,0; 7,5; 8,0; 8,5; 9,0; 9,5; 10,0; 11,0	1	-

Compact automatic flow rate regulator

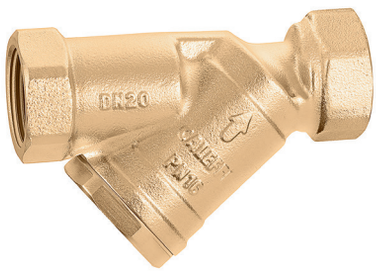

128
AUTOFLOW®

Compact automatic flow rate regulator. AUTOFLOW® cartridge in high resistance tecnopolymer.
Flow rates: 0,02–0,06 m³/h - Δp range: 20–200 kPa - Accuracy: ± 15 %.
Flow rates: 0,085–5,0 m³/h - Δp range: 15–200 kPa - Accuracy: ± 10 %.

Maximum working pressure: 16 bar
Medium temperature range: 0–100 °C
Material: brass
Medium: glycol solutions
Maximum percentage of glycol: 50 %

Code	Connection	Flow rates (m³/h)	Kv (m³/h)		
128141***	1/2″ F	0,02; 0,04; 0,06; 0,085; 0,12; 0,15; 0,2; 0,25; 0,3; 0,35; 0,4; 0,5; 0,6; 0,7; 0,8; 0,9; 1,0; 1,2	6,69	1	-
128151***	3/4″ F	0,02; 0,04; 0,06; 0,085; 0,12; 0,15; 0,2; 0,25; 0,3; 0,35; 0,4; 0,5; 0,6; 0,7; 0,8; 0,9; 1,0; 1,2; 1,4	7,58	1	-
128161***	1″ F	0,5; 0,6; 0,7; 0,8; 0,9; 1,0; 1,2; 1,4; 1,6; 1,8; 2,0; 2,2; 2,5; 2,7; 3,0; 3,2; 3,5; 3,7; 4,0; 4,2; 4,5; 4,7; 5,0	14,00	1	-
128171***	1 1/4″ F	0,5; 0,6; 0,7; 0,8; 0,9; 1,0; 1,2; 1,4; 1,6; 1,8; 2,0; 2,2; 2,5; 2,7; 3,0; 3,2; 3,5; 3,7; 4,0; 4,2; 4,5; 4,7; 5,0	14,50	1	-



128

Insulation for AUTOFLOW 128 series.

Code	Article use		
CBN128141	128141***, 128151***	1	-
CBN128161	128161***, 128171***	1	-

*** For code completion see method of coding on page 236

Automatic flow rate regulator

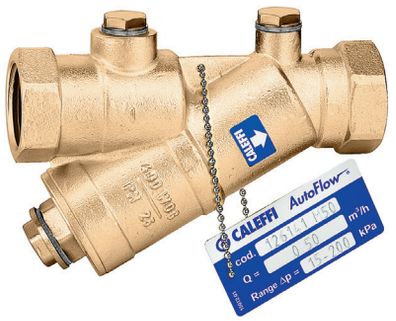

126
AUTOFLOW®

Automatic flow rate regulator with high-performance tecnopolymer cartridge.
Fitted for connection of pressure ports and drain valve.
Accuracy: ± 10 %. Flow rates: 0,085–11,0 m³/h.
PATENT

Maximum working pressure: 25 bar
Medium temperature range: -20–100 °C
Range △p: 15–200 kPa
Material: dezincification resistant brass DR
Medium: water, glycol solutions
Maximum percentage of glycol: 50 %

Code	Connection	Flow rates (m³/h)	Kv (m³/h)		
126141***	1/2″F	0,085; 0,12; 0,15; 0,2; 0,25; 0,3; 0,35; 0,4; 0,5; 0,6; 0,7; 0,8; 0,9; 1,0; 1,2	6,69	1	-
126151***	3/4″F	0,085; 0,12; 0,15; 0,2; 0,25; 0,3; 0,35; 0,4; 0,5; 0,6; 0,7; 0,8; 0,9; 1,0; 1,2; 1,4; 1,6	7,58	1	-
126161***	1″F	0,5; 0,6; 0,7; 0,8; 0,9; 1,0; 1,2; 1,4; 1,6; 1,8; 2,0; 2,25; 2,5; 2,75; 3,0; 3,25; 3,5; 3,75; 4,0; 4,25; 4,5; 4,75; 5,0	14,00	1	-
126171***	1 1/4″F	0,5; 0,6; 0,7; 0,8; 0,9; 1,0; 1,2; 1,4; 1,6; 1,8; 2,0; 2,25; 2,5; 2,75; 3,0; 3,25; 3,5; 3,75; 4,0; 4,25; 4,5; 4,75; 5,0	14,50	1	-
126181***	1 1/2″F	5,5; 6,0; 6,5; 7,0; 7,5; 8,0; 8,5; 9,0; 9,5; 10,0; 11,0	34,72	1	-
126191***	2″F	5,5; 6,0; 6,5; 7,0; 7,5; 8,0; 8,5; 9,0; 9,5; 10,0; 11,0	37,38	1	-

Automatic flow rate regulator and ball valve



121
AUTOFLOW®

Combination of automatic flow rate regulator with high-performance tecnopolymer cartridge and ball valve.
Accuracy: ± 5 %. Flow rates: 0,085–11,0 m³/h.
Designed for pressure point and drain valve connection.
PATENT

Maximum working pressure: 25 bar
Medium temperature range: -20–100 °C
Range △p: 15–200 kPa
Material: dezincification resistant brass DR
Medium: water
Maximum percentage of glycol: 50 %

Code	Connection	Flow rates (m³/h)	Kv (m³/h)		
121141***	1/2″F	0,085; 0,12; 0,15; 0,2; 0,25; 0,3; 0,35; 0,4; 0,5; 0,6; 0,7; 0,8; 0,9; 1,0; 1,2	6,90	1	-
121151***	3/4″F	0,085; 0,12; 0,15; 0,2; 0,25; 0,3; 0,35; 0,4; 0,5; 0,6; 0,7; 0,8; 0,9; 1,0; 1,2; 1,4; 1,6	7,73	1	-
121161***	1″F	0,5; 0,6; 0,7; 0,8; 0,9; 1,0; 1,2; 1,4; 1,6; 1,8; 2,0; 2,25; 2,5; 2,75; 3,0; 3,25; 3,5; 3,75; 4,0; 4,25; 4,5; 4,75; 5,0	18,00	1	-
121171***	1 1/4″F	0,5; 0,6; 0,7; 0,8; 0,9; 1,0; 1,2; 1,4; 1,6; 1,8; 2,0; 2,25; 2,5; 2,75; 3,0; 3,25; 3,5; 3,75; 4,0; 4,25; 4,5; 4,75; 5,0	18,50	1	-
121181***	1 1/2″F	5,5; 6,0; 6,5; 7,0; 7,5; 8,0; 8,5; 9,0; 9,5; 10,0; 11,0	47,24	1	-
121191***	2″F	5,5; 6,0; 6,5; 7,0; 7,5; 8,0; 8,5; 9,0; 9,5; 10,0; 11,0	48,89	1	-

*** *For code completion see method of coding on page 236*

Method for coding AUTOFLOW® 121 - 126 - 127 - 128 series

For correct identification of the device, fill in the form indicating: series, size, flow rate and Δp range.

Complete code

1st	2nd	3rd	4th	5th	6th	7th	8th	9th
			1		1			
SERIES				SIZE		FLOW RATE - Δp RANGE		

SERIES

1st 2nd 3rd

The first three digits indicate the series

121	AUTOFLOW® regulator and ball valve
126	AUTOFLOW® regulator
127	AUTOFLOW® compact regulator
128	AUTOFLOW® compact regulator

SIZE

5th

The fifth digit indicates the size

Size	1/2″	3/4″	1″	1 1/4″	1 1/2″	2″
Digit	4	5	6	7	8	9

FLOW RATE - Δp RANGE

7th 8th 9th

The last three digits indicate the available flow rate

Δp range 20–200 kPa

m³/h	digit	m³/h	digit	m³/h	digit
0,02	M02	0,04	M04	0,06	M06

Δp range 15–200 kPa

m³/h	digit	m³/h	digit	m³/h	digit	m³/h	digit	m³/h	digit	m³/h	digit
0,085	M08	0,40	M40	1,20	1M2	2,75	2M7	4,50	4M5	7,50	7M5
0,12	M12	0,50	M50	1,40	1M4	3,00	3M0	4,75	4M7	8,00	8M0
0,15	M15	0,60	M60	1,60	1M6	3,25	3M2	5,00	5M0	8,50	8M5
0,20	M20	0,70	M70	1,80	1M8	3,50	3M5	5,50	5M5	9,00	9M0
0,25	M25	0,80	M80	2,00	2M0	3,75	3M7	6,00	6M0	9,50	9M5
0,30	M30	0,90	M90	2,25	2M2	4,00	4M0	6,50	6M5	10,0	10M
0,35	M35	1,00	1M0	2,50	2M5	4,25	4M2	7,00	7M0	11,0	11M

Minimum differential pressure required
This is given by the sum of two values:
1. the minimum working Δp of the AUTOFLOW cartridge;
2. the Δp required for the nominal flow rate to pass through the valve body. This value can be determined on the basis of the values of Kv shown above referring to the valve body.

Pump head $H = \Delta p_{circuit} + \Delta_{prequise}$

AUTOMATIC FLOW RATE REGULATOR (AUTOFLOW®)

Automatic flow rate regulator with stainless steel cartridge and ball valve

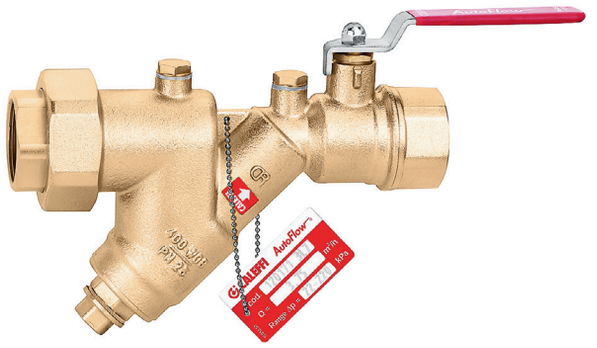

120
AUTOFLOW®

Combination of automatic flow rate regulator, with stainless steel cartridge, and ball valve.
Accuracy: ± 5 %.
Designed for pressure point and drain valve connection.

Maximum working pressure: 25 bar
Medium temperature range: 0–110 °C
Material: dezincification resistant brass DR
Medium: glycol solutions
Maximum percentage of glycol: 50 %

Code	Connection	Flow rates (m^3/h)	Kv		
120141*** (10–95 kPa)	1/2" F	0,3; 0,45; 0,5; 0,6; 0,7; 0,8; 0,9; 1,0	6,9 m^3/h	1	-
120151*** (10–95 kPa)	3/4" F	0,3; 0,45; 0,5; 0,6; 0,7; 0,8; 0,9; 1,0	7,73 m^3/h	1	-
120161*** (10–95 kPa)	1" F	0,7; 0,8; 0,9; 1,0	17,04 m^3/h	1	-
120171*** (10–95 kPa)	1 1/4" F	0,7; 0,8; 0,9; 1,0		1	-
120181*** (10–95 kPa)	1 1/2" F	2,75; 3,0; 3,25; 3,5; 3,75; 4,25; 5,0; 7,0	47,24 m^3/h	1	-
120191*** (10–95 kPa)	2" F	2,75; 3,0; 3,25; 3,5; 3,75; 4,25; 5,0; 7,0	48,89 m^3/h	1	-
120141*** (22–210 kPa)	1/2" F	0,12; 0,15; 0,2; 0,25; 0,35; 0,4; 0,6; 0,7; 0,8; 0,9; 1,2; 1,4; 1,6; 1,8	6,90 m^3/h	1	-
120151*** (22–210 kPa)	3/4" F	0,12; 0,15; 0,2; 0,25; 0,35; 0,4; 0,6; 0,7; 0,8; 0,9; 1,2; 1,4; 1,6; 1,8	7,73 m^3/h	1	-
120161*** (22–210 kPa)	1" F	1,0; 1,2; 1,4; 1,6; 1,8; 2,0; 2,25; 2,5; 2,75; 3,0; 3,25; 3,5; 3,75; 4,0; 4,25	17,04 m^3/h	1	-
120171*** (22–210 kPa)	1 1/4" F	1,0; 1,2; 1,4; 1,6; 1,8; 2,0; 2,25; 2,5; 2,75; 3,0; 3,25; 3,5; 3,75; 4,0; 4,25	17,74 m^3/h	1	-
120181*** (22–210 kPa)	1 1/2" F	4,0; 4,5; 5,5; 6,0; 6,5; 7,5; 8,0; 8,5; 9,0; 9,5; 10,0; 11,0	47,24 m^3/h	1	-
120191*** (22–210 kPa)	2" F	4,0; 4,5; 5,5; 6,0; 6,5; 7,5; 8,0; 8,5; 9,0; 9,5; 10,0; 11,0	48,89 m^3/h	1	-
120141*** (40–390 kPa)	1/2" F	0,25; 0,35; 0,45; 0,7; 0,9; 1,1; 1,4; 1,8; 2,1; 2,25; 2,75	6,90 m^3/h	1	-
120151*** (40–390 kPa)	3/4" F	0,25; 0,35; 0,45; 0,7; 0,9; 1,1; 1,4; 1,8; 2,1; 2,25; 2,75	7,73 m^3/h	1	-
120161*** (40–390 kPa)	1" F	1,6; 1,8; 2,1; 2,25; 2,5; 2,75; 3,0; 3,25; 3,5; 3,75; 4,0; 4,25; 4,5; 5,0; 5,5; 6,0	17,04 m^3/h	1	-
120171*** (40–390 kPa)	1 1/4" F	1,6; 1,8; 2,1; 2,25; 2,5; 2,75; 3,0; 3,25; 3,5; 3,75; 4,0; 4,25; 4,5; 5,0; 5,5; 6,0	17,74 m^3/h	1	-
120181*** (40–390 kPa)	1 1/2" F	3,0; 3,25; 3,5; 3,75; 4,0; 4,25; 4,5; 6,5; 7,0; 7,5; 8,0; 8,5; 9,0; 10,0; 11,0; 12,0; 13,0; 14,5; 15,5	47,24 m^3/h	1	-
120191*** (40–390 kPa)	2" F	3,0; 3,25; 3,5; 3,75; 4,0; 4,25; 4,5; 6,5; 7,0; 7,5; 8,0; 8,5; 9,0; 10,0; 11,0; 12,0; 13,0; 14,5; 15,5	48,89 m^3/h	1	-

*** *For code completion see method of coding on page 239*

Minimum differential pressure required
This is given by the sum of two values:
1. the minimum working Δp of the AUTOFLOW cartridge;
2. the Δp required for the nominal flow rate to pass through the valve body. This value can be determined on the basis of the values of Kv shown above referring to the valve body.

Pump head $H = \Delta p_{circuit} + \Delta_{prequise}$

Automatic flow rate regulator with stainless steel cartridge

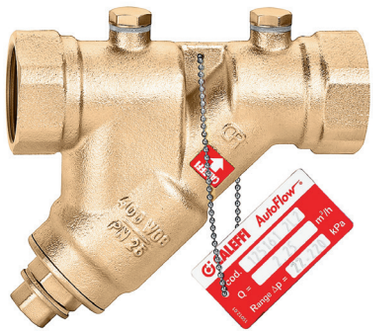

125 AUTOFLOW®

Automatic flow rate regulator with stainless steel cartridge.
Accuracy: ± 5 %.
Designed for pressure point and drain valve connection.

Maximum working pressure: 25 bar
Medium temperature range: -20–110 °C
Material: dezincification resistant brass DR
Medium: glycol solutions
Maximum percentage of glycol: 50 %

Code	Connection	Flow rates (m^3/h)	Kv (m^3/h)		
125141*** (10–95 kPa)	1/2″F	0,3; 0,45; 0,5; 0,6; 0,7; 0,8; 0,9; 1,0	6,69	1	-
125151*** (10–95 kPa)	3/4″F	0,3; 0,45; 0,5; 0,6; 0,7; 0,8; 0,9; 1,0	7,58	1	-
125161*** (10–95 kPa)	1″F	0,7; 0,8; 0,9; 1,0	13,42	1	-
125171*** (10–95 kPa)	1 1/4″F	0,7; 0,8; 0,9; 1,0	13,26	1	-
125181*** (10–95 kPa)	1 1/2″F	2,75; 3,0; 3,25; 3,5; 3,75; 4,25; 5,0; 7,0	34,72	1	-
125191*** (10–95 kPa)	2″F	2,75; 3,0; 3,25; 3,5; 3,75; 4,25; 5,0; 7,0	37,38	1	-
125141*** (22–210 kPa)	1/2″F	0,12; 0,15; 0,2; 0,25; 0,35; 0,4; 0,6; 0,7; 0,8; 0,9; 1,2; 1,4; 1,6; 1,8	6,69	1	-
125151*** (22–210 kPa)	3/4″F	0,12; 0,15; 0,2; 0,25; 0,35; 0,4; 0,6; 0,7; 0,8; 0,9; 1,2; 1,4; 1,6; 1,8	7,58		-
125161*** (22–210 kPa)	1″F	1,0; 1,2; 1,4; 1,6; 1,8; 2,0; 2,25; 2,5; 2,75; 3,0; 3,25; 3,5; 3,75; 4,0; 4,25	13,42	1	-
125171*** (22–210 kPa)	1 1/4″F	1,0; 1,2; 1,4; 1,6; 1,8; 2,0; 2,25; 2,5; 2,75; 3,0; 3,25; 3,5; 3,75; 4,0; 4,25	13,26	1	-
125181*** (22–210 kPa)	1 1/2″F	4,0; 4,5; 5,5; 6,0; 6,5; 7,5; 8,0; 8,5; 9,0; 9,5; 10,0; 11,0	34,72	1	-
125191*** (22–210 kPa)	2″F	4,0; 4,5; 5,5; 6,0; 6,5; 7,5; 8,0; 8,5; 9,0; 9,5; 10,0; 11,0	37,38	1	-
125101*** (22–210 kPa)	2 1/2″F	9,0; 9,5; 10,0; 11,0; 12,0; 13,5; 14,5; 15,5; 16,5; 17,0	75,82	1	-
125141*** (40–390 kPa)	1/2″F	0,25; 0,35; 0,45; 0,7; 0,9; 1,1; 1,4; 1,8; 2,1; 2,25; 2,75	6,69	1	-
125151*** (40–390 kPa)	3/4″F	0,25; 0,35; 0,45; 0,7; 0,9; 1,1; 1,4; 1,8; 2,1; 2,25; 2,75	7,58	1	-
125161*** (40–390 kPa)	1″F	2,5; 2,75; 3,0; 3,25; 3,5; 3,75; 4,0; 4,25; 4,5; 5,0; 5,5; 6,0	13,42	1	-
125171*** (40–390 kPa)	1 1/4″F	2,5; 2,75; 3,0; 3,25; 3,5; 3,75; 4,0; 4,25; 4,5; 5,0; 5,5; 6,0	13,26	1	-
125181*** (40–390 kPa)	1 1/2″F	3,0; 3,25; 3,5; 3,75; 4,0; 4,25; 4,5; 6,5; 7,0; 7,5; 8,0; 8,5; 9,0; 10,0; 11,0; 12,0; 13,0; 14,5; 15,5	34,72	1	-
125191*** (40–390 kPa)	2″F	3,0; 3,25; 3,5; 3,75; 4,0; 4,25; 4,5; 6,5; 7,0; 7,5; 8,0; 8,5; 9,0; 10,0; 11,0; 12,0; 13,0; 14,5; 15,5	37,38	1	-
125101*** (40–390 kPa)	2 1/2″F	6,5; 7,0; 7,5; 8,0; 8,5; 9,0; 11,0; 18,0; 19,0; 20,0; 21,0; 22,0	75,82	1	-

*** *For code completion see method of coding on page 239*

Minimum differential pressure required
This is given by the sum of two values:
1. the minimum working Δp of the AUTOFLOW cartridge;
2. the Δp required for the nominal flow rate to pass through the valve body. This value can be determined on the basis of the values of Kv shown above referring to the valve body.

Pump head $H = \Delta p_{circuit} + \Delta_{prequise}$

Method for coding AUTOFLOW® 120 - 125 series

For correct identification of the device, fill in the form indicating: series, size, flow rate and Δp range.

Complete code

1st	2nd	3rd	4th	5th	6th	7th	8th	9th
			1		1			
SERIES				SIZE		FLOW RATE AND Δp RANGE		

SERIES

1st 2nd 3rd

The first three digits indicate the series:

120	AUTOFLOW® regulator and ball valve
125	AUTOFLOW® regulator

SIZE

5th

The fifth digit indicates the size:

Size	1/2″	3/4″	1″	1 1/4″	1 1/2″	2″	2 1/2″
Digit	4	5	6	7	8	9	0

FLOW RATE AND Δp RANGE

7th 8th 9th

The last three digits indicate the available flow rates.

Δp range 10–95 kPa

m³/h	digit	m³/h	digit	m³/h	digit	m³/h	digit
0,30	S30	0,70	S70	2,75	2S7	3,75	3S7
0,45	S45	0,80	S80	3,00	3S0	4,25	4S2
0,50	S50	0,90	S90	3,25	3S2	5,00	5S0
0,60	S60	1,00	1S0	3,50	3S5	7,00	7S0

Δp range 22–210 kPa

m³/h	digit	m³/h	digit	m³/h	digit	m³/h	digit	m³/h	digit	m³/h	digit
0,12	L12	0,70	L70	1,80	1L8	3,50	3L5	6,50	6L5	11,0	11L
0,15	L15	0,80	L80	2,00	2L0	3,75	3L7	7,50	7L5	12,0	12L
0,20	L20	0,90	L90	2,25	2L2	4,00	4L0	8,00	8L0	13,5	13L
0,25	L25	1,00	1L0	2,50	2L5	4,25	4L2	8,50	8L5	14,5	14L
0,35	L35	1,20	1L2	2,75	2L7	4,50	4L5	9,00	9L0	15,5	15L
0,40	L40	1,40	1L4	3,00	3L0	5,50	5L5	9,50	9L5	16,5	16L
0,60	L60	1,60	1L6	3,25	3L2	6,00	6L0	10,0	10L	17,0	17L

Δp range 40–390 kPa

m³/h	digit	m³/h	digit	m³/h	digit	m³/h	digit	m³/h	digit	m³/h	digit	m³/h	digit
0,25	H25	1,40	1H4	3,25	3H2	5,00	5H0	8,00	8H0	13,0	13H	21,0	21H
0,35	H35	1,80	1H8	3,50	3H5	5,50	5H5	8,50	8H5	14,5	14H	22,0	22H
0,45	H45	2,10	2H1	3,75	3H7	6,00	6H0	9,00	9H0	15,5	15H		
0,70	H70	2,25	2H2	4,00	4H0	6,50	6H5	10,0	10H	18,0	18H		
0,90	H90	2,75	2H7	4,25	4H2	7,00	7H0	11,0	11H	19,0	19H		
1,10	1H1	3,00	3H0	4,50	4H5	7,50	7H5	12,0	12H	20,0	20H		

Automatic flow regulator with stainless steel cartridge, flanged



103 AUTOFLOW®

Automatic flow rate regulator with stainless steel cartridge.
Complete with flanges, rods, seals and quick-fit pressure test ports.

Maximum working pressure: 16 bar
Medium temperature range: -20–110 °C
Material: cast iron
Medium: water, glycol solutions
Maximum percentage of glycol: 50 %

Code	Connection	Notes	Flow rate regulation (m^3/h)	Range △p (kPa)		
103111***	DN 65 - PN 16	EN 1092 -1 flange, PN 16	9–17	22–210	1	-
103113***	DN 65 - PN 16	EN 1092 -1 flange, PN 16	18–23	40–390	1	-
103114***	DN 65 - PN 16	EN 1092 -1 flange, PN 16	25–26	55–210	1	-
103121***	DN 80 - PN 16	EN 1092 -1 flange, PN 16	9–17 m^3/h	22–210	1	-
103123***	DN 80 - PN 16	EN 1092-1 flange, PN 16	18–23 m^3/h	40–390	1	-
103124***	DN 80 - PN 16	EN 1092 -1 flange, PN 16	25–36 m^3/h	55–210	1	-
103231***	DN 100 - PN 16	EN 1092-1 flange, PN 25	18–34 m^3/h	22–210	1	-
103233***	DN 100 - PN 25	EN 1092-1 flange, PN 25	23–45 m^3/h	40–390	1	-
103234***	DN 100 - PN 25	EN 1092-1 flange, PN 25	50–73	55–210	1	-
103141***	DN 125 - PN 16	EN 1092 -1 flange, PN 16	18–34	22–210	1	-
103143***	DN 125 - PN 16	EN 1092 -1 flange, PN 16	23–45 m^3/h	40–390	1	-
103144***	DN 125 - PN 16	EN 1092 -1 flange, PN 16	50–73 m^3/h	55–210	1	-
103151***	DN 150 - PN 16	EN 1092 -1 flange, PN 16	40–68	22–210	1	-
103153***	DN 150 - PN 16	EN 1092 -1 flange, PN 16	40–91 m^3/h	40–390	1	-
103154***	DN 150 - PN 16	EN 1092 -1 flange, PN 16	92–145 m^3/h	55–210	1	-
103161***	DN 200 - PN 16	ANSI 150 flange	80–119	22–210	1	-
103163***	DN 200 - PN 16	ANSI 150 flange	80–159	40–390	1	-
103164***	DN 200 - PN 16	ANSI 150 flange	160–255	55–210	1	-
103171***	DN 250 - PN 16	ANSI 150 flange	110–187	22–210	1	-
103173***	DN 250 - PN 16	ANSI 150 flange	110–250	40–390	1	-
103174***	DN 250 - PN 16	ANSI 150 flange	251–400	55–210	1	-
103181***	DN 300 - PN 16	ANSI 150 flange	150–255	22–210	1	-
103183***	DN 300 - PN 16	ANSI 150 flange	150–341	40–390	1	-
103184***	DN 300 - PN 16	ANSI 150 flange	342–545	55–210	1	-

Minimum differential pressure required
This is given by the sum of two values:
1. the minimum working Δp of the AUTOFLOW cartridge;
2. the Δp required for the nominal flow rate to pass through the valve body. This value can be determined on the basis of the values of Kv shown above referring to the valve body.

Pump head $H = \Delta p_{circuit} + \Delta_{prequise}$

Available in DN 350 to DN 1000 sizes on request,with flow rates of up to 4400 m^3/h.
To identify AUTOFLOW® devices and their codes correctly, contact Caleffi technical supporte in advance.

Method for coding AUTOFLOW® 103 series

For correct identification of the device, fill in the form indicating: size, Δp range and the flow rate.

Complete code

1st	2nd	3rd	4th	5th	6th	7th	8th	9th
1	0	3	1					
Series			(*)	SIZE	Δp RANGE	FLOW RATE		

(*) 4th

for codes 103231, 103233, 103234

DN	100
Digit	2

SIZE 5th

The fifth figure indicates the size:

DN	65	80	100	125	150	200	250	300
Digit	1	2	3	4	5	6	7	8

Δp RANGE 6th

The sixth figure indicates the differential pressure range (Δp range):

kPa	22–210	40–390	55–210
Digit	1	3	4

FLOW RATE 7th 8th 9th

The last three digits indicate the flow rate values.

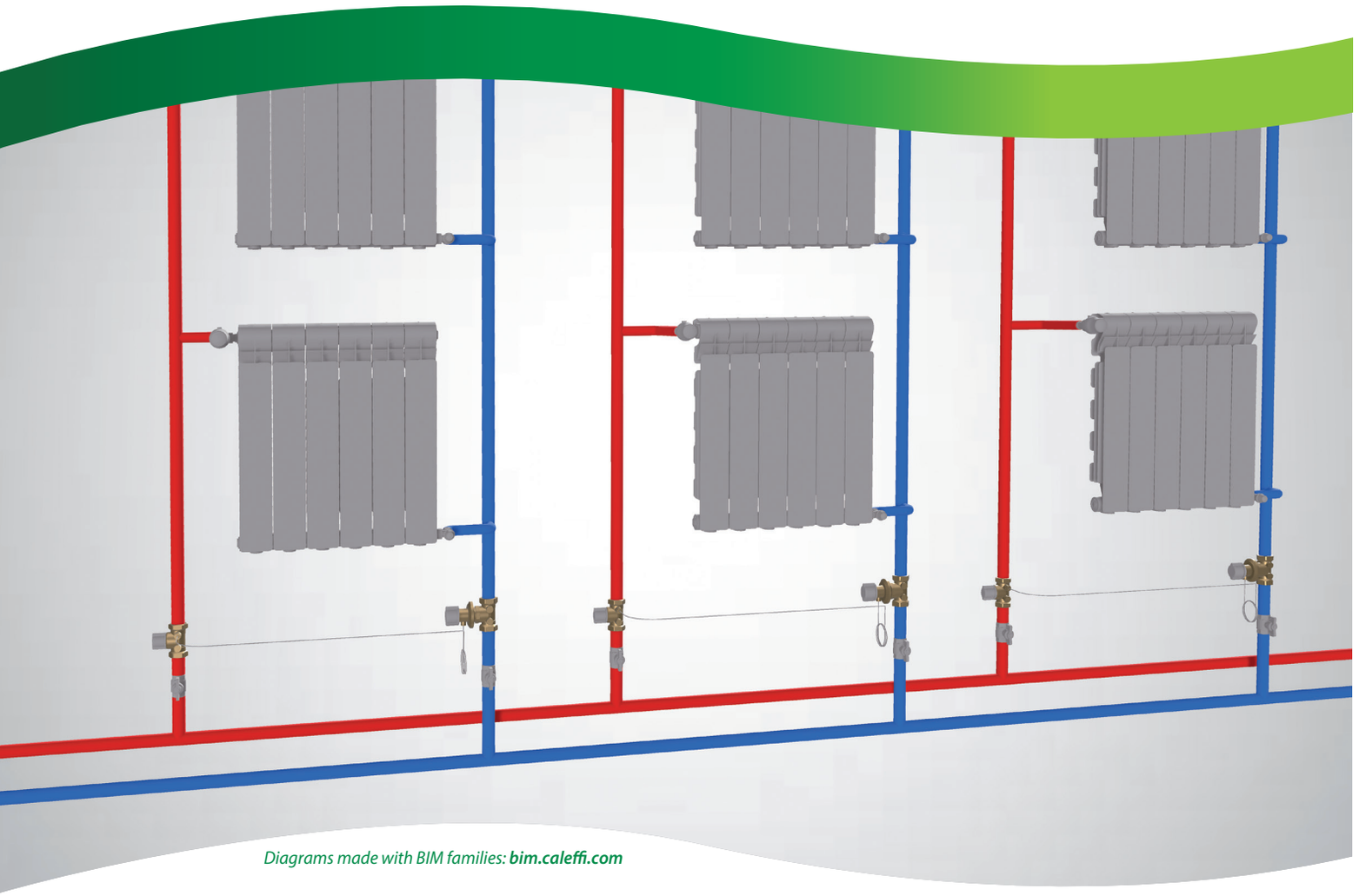

Diagrams made with BIM families: ***bim.caleffi.com***

Differential pressure control valve (DPCV)
Differential by-pass valve
Measurement and control accessories

DIFFERENTIAL PRESSURE CONTROL DEVICES

Differential pressure control valve (DPCV)

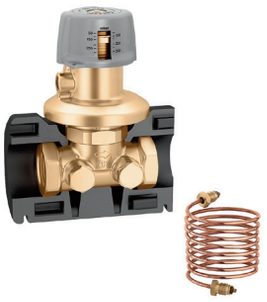

140

Differential pressure control valve (DPCV).
Complete with capillary connection pipe to the valve on the flow pipe.
With insulation.

Maximum working pressure: 16 bar
Medium temperature range: -10–120 °C
Capillary length: 1,5 m
Medium: water, glycol solutions
Maximum percentage of glycol: 50 %
Material: dezincification resistant brass DR

Code	Connection	Notes	△p setting (mbar)		
140340	1/2″F	-	50–300	1	5
140440	1/2″F	-	250–600	1	-
140350	3/4″F	-	50–300	1	5
140450	3/4″F	-	250–600	1	-
140360	1″F	-	50–300	1	5
140460	1″F	-	250–600	1	5
140342	1/2″F	without insulation	50–300	1	10
140442	1/2″F	without insulation	250–600	1	10
140352	3/4″F	without insulation	50–300	1	10
140452	3/4″F	without insulation	250–600	1	10
140362	1″F	without insulation	50–300	1	5
140462	1″F	without insulation	250–600	1	5

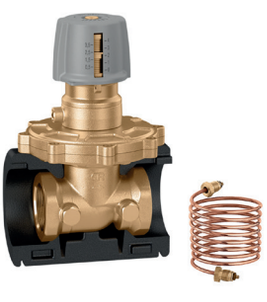

140

Differential pressure control valve (DPCV).
Complete with capillary connection pipe to the valve on the flow pipe.
With insulation.

Maximum working pressure: 10 bar
Medium temperature range: -10–120 °C
Capillary length: 1,5 m
Medium: water, glycol solutions
Maximum percentage of glycol: 50 %
Material: dezincification resistant brass DR

Code	Connection	Notes	△p setting (mbar)		
140370	1 1/4″F	-	50–300	1	-
140470	1 1/4″F	-	250–600	1	-
140380	1 1/2″F	-	50–300	1	-
140480	1 1/2″F	-	250–600	1	-
140372	1 1/4″F	without insulation	50–300	1	-
140472	1 1/4″F	without insulation	250–600	1	-
140382	1 1/2″F	without insulation	50–300	1	-
140482	1 1/2″F	without insulation	250–600	1	-
140392	2″F	without insulation	50–300	1	-
140492	2″F	without insulation	250–600	1	-

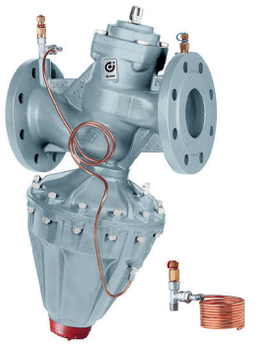

140

Differential pressure control valve (DPCV).
To be coupled with flat counterflanges EN 1092-1.
Complete with quick-fit pressure test ports.

Maximum working pressure: 16 bar
Medium temperature range: -10–120 °C
Medium: glycol solutions, water
Maximum percentage of glycol: 50 %
Material: cast iron

Code	Connection	△p setting (mbar)		
140506	DN 65 - PN 16	200–1000	1	-
140606	DN 65 - PN 16	800–1600	1	-
140508	DN 80 - PN 16	200–1000	1	-
140608	DN 80 - PN 16	800–1600	1	-
140510	DN 100 - PN 16	200–1000	1	-
140610	DN 100 - PN 16	800–1600	1	-
140512	DN 125 - PN 16	200–1000	1	-
140515	DN 150 - PN 16	200–1000	1	-



142

Shut-off and pre-regulation valve.
With insulation.

Maximum working pressure: 16 bar
Medium temperature range: -10–120 °C
Medium: water, glycol solutions
Maximum percentage of glycol: 50 %
Material: dezincification resistant brass DR

Code	Connection	Notes		
142140	1/2″F	-	1	5
142150	3/4″F	-	1	5
142160	1″F	-	1	10
142240	1/2″F	without insulation	1	10
142250	3/4″F	without insulation	1	10
142260	1″F	without insulation	1	-

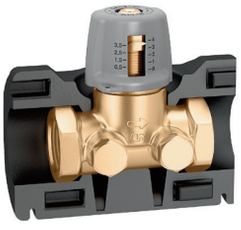

142

Shut-off and pre-regulation valve.
With insulation.

Maximum working pressure: 16 bar
Medium temperature range: -10–120 °C
Medium: water, glycol solutions
Maximum percentage of glycol: 50 %
Material: dezincification resistant brass DR

Code	Connection	Notes		
142170	1 1/4″F	-	1	-
142180	1 1/2″F	-	1	-
142270	1 1/4″F	without insulation	1	5
142280	1 1/2″F	without insulation	1	5
142290	2″F	without insulation	1	-

Differential by-pass valve



519

Differential by-pass valve, adjustable with graduated scale.

Maximum working pressure: 10 bar
Medium temperature range: 0–110 °C
Medium: water, glycol solutions
Maximum percentage of glycol: 30 %

WRAS APPROVED PRODUCT CERTIFICATION MARK

Code	Inlet connection	Outlet connection	Setting range (m w.g.)		
519002	Ø 22	Ø 22	1–6	1	50
519500	3/4" F	3/4" M	1–6	1	50
519504	3/4" F	3/4" M	10–40	1	50
519700	1 1/4" F	1 1/4" M	1–6	1	10
519703	1 1/4" F	1 1/4" M	5–25	1	10



518

Differential by-pass valve, adjustable with graduated scale.

Maximum working pressure: 10 bar
Medium temperature range: 0–100 °C
Medium: water, glycol solutions
Maximum percentage of glycol: 30 %

Code	Connection	Setting range (m w.g.)		
518015	3/4" M	1–6	1	25



518

Differential by-pass valve, adjustable with graduated scale.

Maximum working pressure: 10 bar
Medium temperature range: 0–100 °C
Maximum percentage of glycol: 30 %
Medium: water, glycol solutions

Code	Inlet connection	Outlet connection	Setting range (m w.g.)		
518500	3/4" F	3/4" M	1–6	1	25
518002	Ø 22	Ø 22	1–6	1	25
518012	Ø 22	Ø 22	3–10	1	25

Measurement and control accessories



130

Electronic flow rate and differential pressure measuring station.
Supplied with shut-off valves and connection fittings.
Bluetooth® transmission between △p meter and remote control unit.
It can also be used to measure the flow rate of series 130 and 142 balancing valves, and the 149 unit.
Can be used for measuring △p on automatic flow rate regulators.
Versions complete with remote control unit with Android® application for Smartphone and Tablet.

Measurement range: 0–1000 kPa
Maximum working pressure (static): 1000 kPa
Electric supply: with battery

CE

Code	Notes		
130006	complete with remote control unit, with Android® application	1	-
130005	without remote control unit, with Android® application	1	-



100

Pair of fast-plug pressure/temperature test ports.
Cap cover facing available in:
- Red for upstream pressure test port.
- Green for downstream pressure test port.
EPDM seals.

Maximum working pressure: 30 bar
Medium temperature range: -5–130 °C
Material: brass

Code	Connection		
100000	1/4" M	1	100



538

Manual shut-off cock.
Seals in non-asbestos fibre.

Maximum working pressure: 16 bar
Medium temperature range: -10–120 °C
Material: brass

Code	Connection 1	Connection 2		
538203	1/4" F	1/4" M	1	-



538

Drain cock with hose connection and cap.

Maximum working pressure: 10 bar
Medium temperature range: 5–110 °C

Code	Connection		
538201	1/4″ M	1	100
538400	1/2″ M	1	100



140

Dual tee for pressure test ports.

Code	Connection		
140002	1/4″ M	1	-



100

Pair of fittings with fast-plug syringe for connection of pressure ports to measuring instruments.

Maximum working pressure: 10 bar
Medium temperature range: 5–110 °C

Code	Connection		
100010	1/4″ F	1	-

REGULATING VALVES

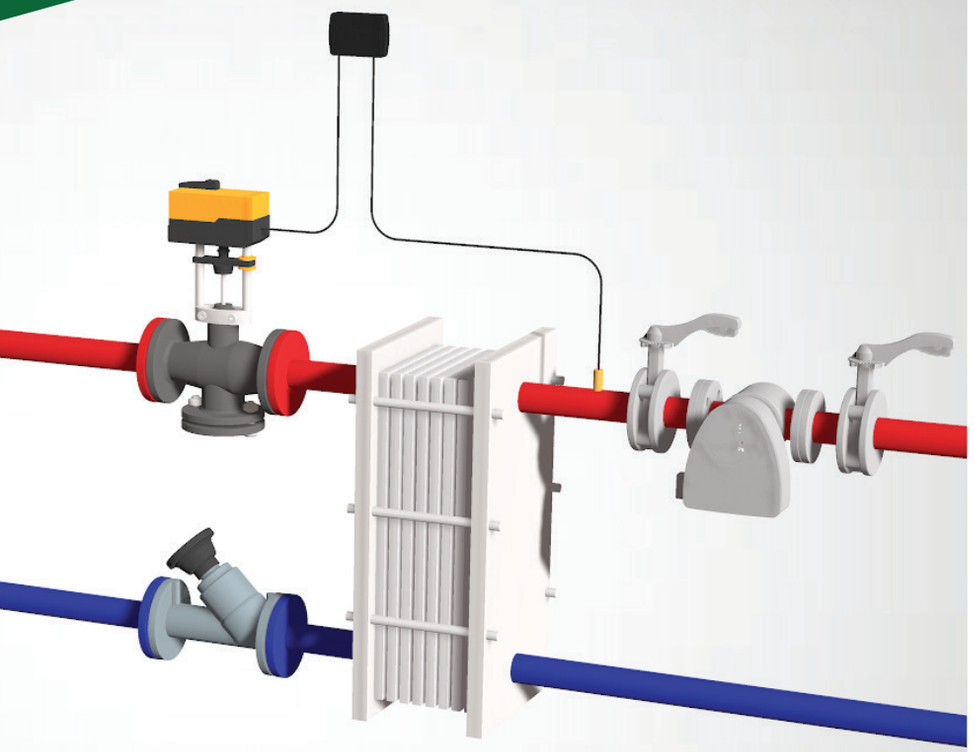

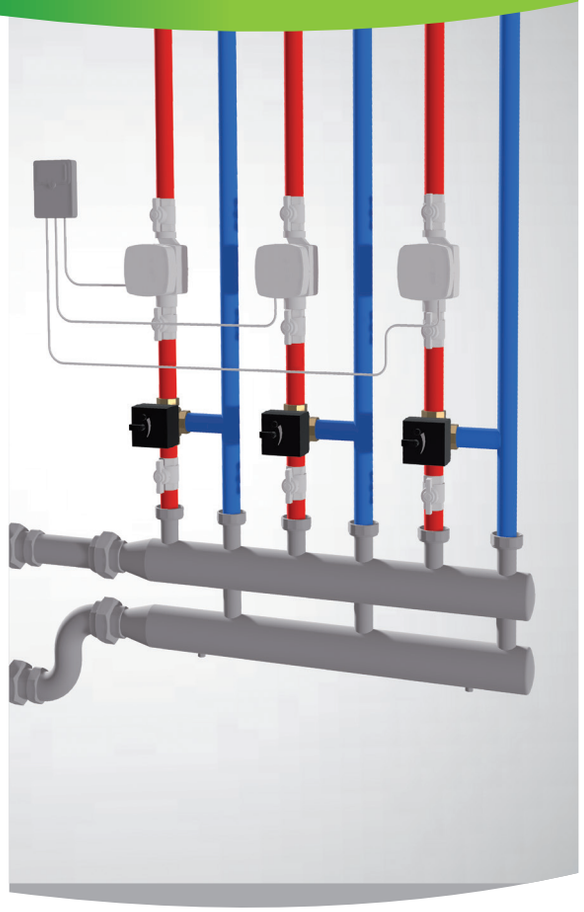

Diagrams made with BIM families: ***bim.caleffi.com***

Brass regulating valve
Linear actuator for regulating brass valves
Cast iron regulating valve
Linear actuator for regulating cast iron valves
Cast iron mixing regulation valves
Actuators
Brass mixing regulation valves
Regulators

REGULATING GLOBE VALVES

Brass regulating valve



636

Two-way regulating globe valve, threaded.
Equal percentage regulation.

Maximum working pressure: 16 bar
Medium temperature range: 0–100 °C
Nominal pressure: PN 16
Material: dezincification resistant brass DR

Code	Connection	DN	Kv (m^3/h)		
636400	Rp 1/2″ F	DN 15	4	1	-
636500	Rp 3/4″ F	DN 20	6,3	1	-
636600	Rp 1″ F	DN 25	10	1	-
636700	Rp 1 1/4″ F	DN 32	16	1	-
636800	Rp 1 1/2″ F	DN 40	22	1	-
636900	Rp 2″ F	DN 50	28	1	-



636

Three-way regulating globe valve, threaded.
Equal percentage/linear regulation.

Maximum working pressure: 16 bar
Medium temperature range: 0–100 °C
Nominal pressure: PN 16
Material: dezincification resistant brass DR

Code	Connection	DN	Kv (m^3/h)		
636410	Rp 1/2″ F	DN 15	4	1	-
636510	Rp 3/4″ F	DN 20	6,3	1	-
636610	Rp 1″ F	DN 25	10	1	-
636710	Rp 1 1/4″ F	DN 32	16	1	-
636810	Rp 1 1/2″ F	DN 40	22	1	-
636910	Rp 2″ F	DN 50	28	1	-

Application diagram of threaded three-way regulating valve

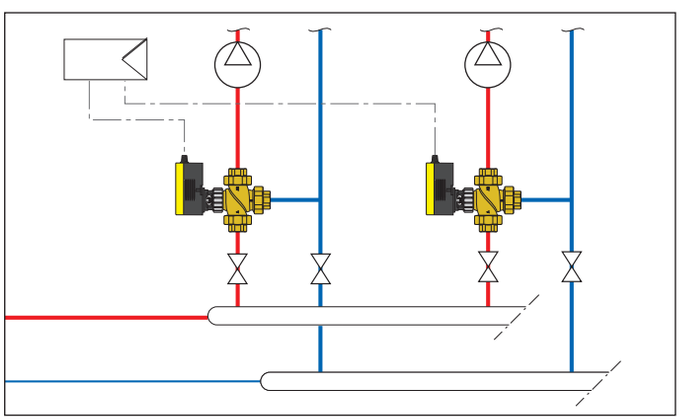

Linear actuator for regulating brass valves



636

Proportional actuator for threaded regulating valves 636 series, nominal force 250 N.

Ambient temperature range: -10–55 °C
Protection class: IP 54
Control signal: 2 point, 3 point, 0–10 V
Feedback signal: 0–10 V
Opening-Closing time: 35 s, 60 s, 120 s

CE

Code	Notes	Electric supply		
636004	nominal force 250N	24 V AC	1	-



636

Actuator for threaded regulating valves 636 series, nominal force 500 N.

Ambient temperature range: -10–55 °C
Protection class: IP 54
Control signal: 3 point, 2 point
Opening-Closing time: 120 s

CE

Code	Notes	Electric supply		
636002	nominal force 500 N	230 V AC	1	-



636

Proportional actuator for threaded regulating valves 636 series, nominal force 500 N.

Ambient temperature range: -10–55 °C
Protection class: IP 54
Control signal: 3 point, 0–10 V, 2 point
Feedback signal: 0–10 V
Opening-Closing time: 60 s, 120 s

CE

Code	Notes	Electric supply		
636014	nominal force 500 N	24 V AC	1	-

Max. Δp table: actuator + threaded valve body 636 series

Code body valve	Actuator code 636004	Actuator code 636002	Actuator code 636014
6364.0	4 bar	6 bar	6 bar
6365.0	4 bar	5 bar	5 bar
6366.0	4 bar	4 bar	4 bar
6367.0	3 bar	3,5 bar	3,5 bar
6368.0	1,9 bar	3 bar	3 bar
6369.0	1 bar	2,4 bar	2,4 bar

Cast iron regulating valve



636

Two/three-way regulating globe valve with flanged connection.
Coupling with counterflange EN 1092-1.
Equal percentage regulation (two-way).
Equal percentage/linear regulation (three-way).

Maximum working pressure: 16 bar
Medium temperature range: 0–100 °C
Nominal pressure: PN 16
Material: cast iron

Code	Connection	Kv (m^3/h)		
636060	DN 65 - PN 16	63	1	-
636080	DN 80 - PN 16	100	1	-
636100	DN 100 - PN 16	160	1	-
636120	DN 125 - PN 16	220	1	-
636150	DN 150 - PN 16	320	1	-

The valve can be transformed into a three-way valve by opening the central third port.

Application diagram of flanged two-way regulating valve

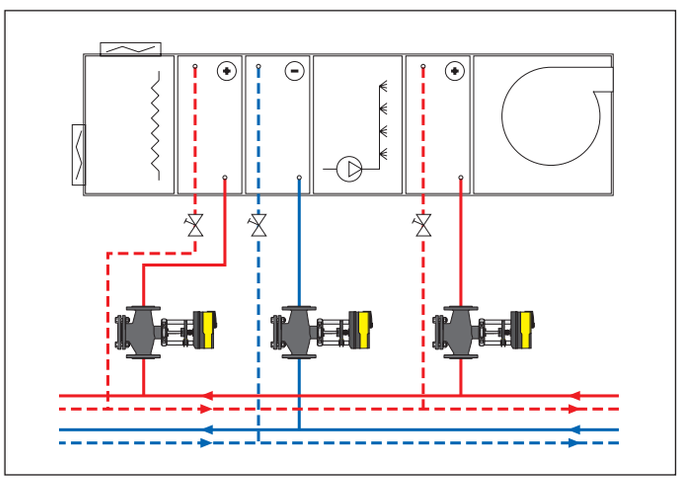

Application diagram of flanged three-way regulating valve

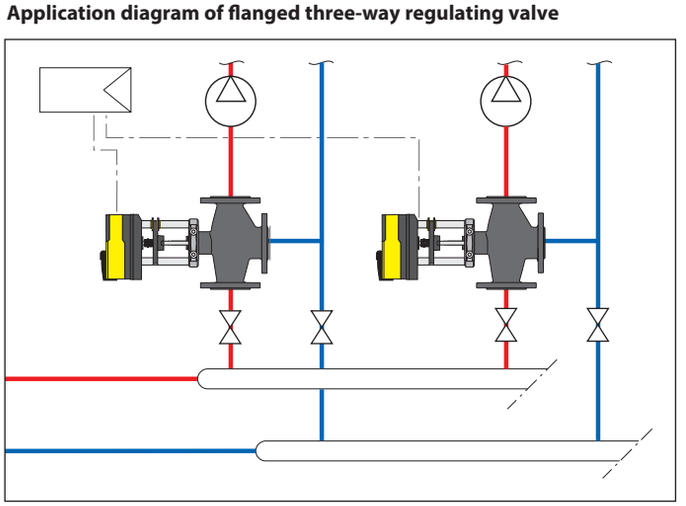

Linear actuator for regulating cast iron valves



636

Actuator for flanged regulating valves 636060 and 636080.

Ambient temperature range: -10–55 °C
Protection class: IP 54
Control signal: 4–20 mA, 2 point, 0–10 V, 3 point
Feedback signal: 0–10 V
Opening-Closing time: 120 s

Code	Notes	Electric supply		
636024	nominal force 1000N	24 V AC	1	-



636

Actuator for flanged regulating valves 636 series.
Operating time:
40 s/80 s/120 s DN 65-DN 80;
80 s/160 s/240s DN 100-DN150.

Ambient temperature range: -10–55 °C
Protection class: IP 66
Control signal: 4–20 mA, 2 point, 3 point, 0–10 V
Feedback signal: 0–10 V

Code	Notes	Electric supply		
636034	nominal force 2500 N	24 V AC	1	-

Max. Δp table: actuator + flanged valve body 636 series

Code body valve	Actuator code 636024	Actuator code 636034
636060	2,5 bar	3 bar
636080	1,5 bar	3 bar
636100	-	2 bar
636125	-	1,5 bar
636150	-	1 bar

REGULATING MIXING VALVES

Cast iron mixing regulation valves



610

Three-way butterfly mixing valve, threaded connections.
Factory configuration: boiler inlet on the RH connection.

Maximum working pressure: 6 bar
Medium temperature range: 2–110 °C

Code	Connection	Kv (m^3/h)		
610005	3/4″F	7,5	1	-
610006	1″F	11,9	1	-
610007	1 1/4″F	16,8	1	-
610008	1 1/2″F	30	1	-
610009	2″F	45	1	-
610020	2 1/2″F	72	1	-



611

Four-way butterfly mixing valve, threaded connections.
Factory configuration: boiler inlet on the RH connection.

Maximum working pressure: 6 bar
Medium temperature range: 2–110 °C

Code	Connection	Kv (m^3/h)		
611005	3/4″F	7,8	1	-
611006	1″F	12,3	1	-
611007	1 1/4″F	18,5	1	-
611008	1 1/2″F	30	1	-
611009	2″F	53	1	-
611020	2 1/2″F	80	1	-



610

Three-way butterfly mixing valve, flanged connections.
To be coupled with flat counterflanges EN 1092-1.
Factory configuration: boiler inlet on the RH connection.

Maximum working pressure: 6 bar
Medium temperature range: 2–110 °C
Nominal pressure: PN 6

Code	Connection	Kv (m^3/h)		
610050	DN 50 - PN 6	45	1	-
610060	DN 65 - PN 6	72	1	-
610080	DN 80 - PN 6	140	1	-
610100	DN 100 - PN 6	183	1	-
610120	DN 125 - PN 6	340	1	-



611

Four-way butterfly mixing valve, flanged connections.
To be coupled with flat counterflanges EN 1092-1.
Factory configuration: boiler inlet on the RH connection.

Maximum working pressure: 6 bar
Medium temperature range: 2–110 °C
Nominal pressure: PN 6

Code	Connection	Kv (m^3/h)		
611050	DN 50 - PN 6	53	1	-
611060	DN 65 - PN 6	80	1	-
611080	DN 80 - PN 6	140	1	-
611100	DN 100 - PN 6	230	1	-
611120	DN 125 - PN 6	410	1	-

Mixing valve - actuator coupling table

	VALVE CODE	GENERATOR INLET	VALVE OPENING	ACTUATOR
Three-way butterfly 610 series, 3/4" - 1 1/2"	610005 - 610006 - 610007 - 610008	**Right**	**Counter clockwise rotation**	**638032**
		Left	**Clockwise rotation**	**638002**
Three-way butterfly 610 series, 2" - 2 1/2" DN 50 - DN 125	610009 - 610020 - 610050 - 610060 - 610080 - 610100 - 610120	**Right**	**Counter clockwise rotation**	**638022**
		Left	**Clockwise rotation**	**638022**
Four-way butterfly 611 series, 3/4" - 1 1/2"	611005 - 611006 - 611007 - 611008	**Right**	**Counter clockwise rotation**	**638032**
		Left	**Clockwise rotation**	**638002**
Four-way butterfly 611 series, 2" - 2 1/2" DN 50 - DN 125	611009 - 611020 - 611050 - 611060 - 611080 - 611100 - 611120	**Right**	**Counter clockwise rotation**	**638022**
		Left	**Clockwise rotation**	**638022**
612 series sector, 3/4" - 1 1/2"	612005/612035 - 612006/612036 - 612007/612037 - 612008/612038	**Right**	**Clockwise rotation**	**638002**
		Left	**Counter clockwise rotation**	**638032**
612 series sector, 2" - 2 1/2" DN 50 - DN 125	612009/612039 - 612020/612031 - 612050 - 612060 - 612080 - 612100 - 612120	**Right**	**Clockwise rotation**	**638022**
		Left	**Counter clockwise rotation**	**638022**



612

Three-way sector mixing valve, threaded connections.
Factory configuration: boiler inlet on the RH connection.

Maximum working pressure: 6 bar
Medium temperature range: 2–110 °C

Code	Connection	Article use		
612005	3/4" F	612025	1	-
612006	1" F	612026	1	-
612007	1 1/4" F	612027	1	-
612008	1 1/2" F	612028	1	-
612009	2" F	612029	1	-
612020	2 1/2" F	612021	1	-



612

Three-way sector mixing valve, threaded connections.
Factory configuration: boiler inlet on the LH connection.

Maximum working pressure: 6 bar
Medium temperature range: 2–110 °C

Code	Connection	Kv (m^3/h)		
612035	3/4" F	7,2	1	-
612036	1" F	11,9	1	-
612037	1 1/4" F	16,5	1	-
612038	1 1/2" F	30	1	-
612039	2" F	42	1	-
612031	2 1/2" F	62	1	-



612

Three-way sector mixing valve.
To be coupled with flat counterflanges EN 1092-1.
Factory configuration: boiler inlet on the RH connection.

Maximum working pressure: 6 bar
Medium temperature range: 2–110 °C
Nominal pressure: PN 6

Code	Connection	Kv (m^3/h)		
612050	DN 50 - PN 6	42	1	-
612060	DN 65 - PN 6	62	1	-
612080	DN 80 - PN 6	123	1	-
612100	DN 100 - PN 6	172	1	-
612120	DN 125 - PN 6	340	1	-

Actuators



638

Actuator for mixing valves from 3/4" to 1 1/2".
Complete with adapter.
With auxiliary microswitch.

Auxiliary microswitch contact rating (230 V): 6 (2) A
Protection class: IP 65

CE

Code	Electric supply	Opening-Closing time		
638002	230 V AC	50 s (90° rot.)	1	5



638

Actuator for mixing valves from 3/4" to 1 1/2".
Complete with adapter.
With auxiliary microswitch.

Auxiliary microswitch contact rating (230 V): 6 (2) A
Protection class: IP 65

CE

Code	Electric supply	Opening-Closing time		
638032	230 V AC	50 s (90° rot.)	1	5



638

Actuator for mixing valves from 2" to 5".
Complete with adapter.
With double auxiliary microswitch.

Auxiliary microswitch contact rating (230 V): 6 (2) A
Protection class: IP 65

CE

Code	Electric supply	Opening-Closing time		
638022	230 V AC	60 s (90° rot.), 180 s (90° rot.)	1	5

To replace code 637012, contact Caleffi technical support in advance

Brass mixing regulation valves



610

Three-way sector mixing valve, threaded connections.
Factory configuration: boiler inlet on the RH connection.

Maximum working pressure: 10 bar
Medium temperature range: 5–110 °C
△p max.: 1 bar
Material: brass

Code	Connection	Kv (m^3/h)		
610400	Rp 1/2″ F	4	1	-
610500	Rp 3/4″ F	6,3	1	-
610600	Rp 1″ F	10	1	-
610700	Rp 1 1/4″ F	15	1	-
610800	Rp 1 1/2″ F	25	1	-
610900	Rp 2″ F	40	1	-

Mixing valve function*

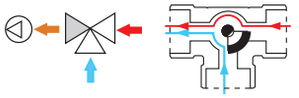

Diverter valve function*

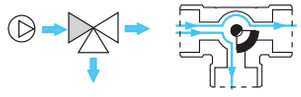

*Leakage (Δp 1 bar ≤ 0,5 % Kv EN 12226-1)

Legend:
Boiler flow
System flow
System return

Mixing valve function

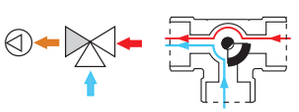

Mixing valve function

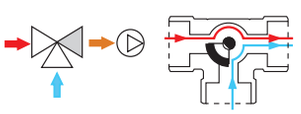

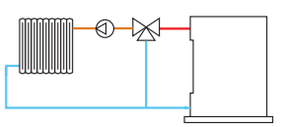

Boiler inlet configuration on the RH side (from factory)

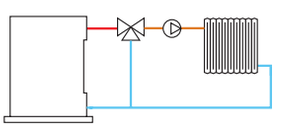

Boiler inlet configuration on the LH side



6370

Actuator for sector mixing valve, **three-point control**.
For mixing valves codes 610 from 1/2″ to 2″ and for unit 167 series.
Actuator torque 5 N·m.

Ambient temperature range: 0–55 °C
Protection class: IP 44
Supply cable length: 1,5 m

Code	Article use	Electric supply	Opening-Closing time		
637042	167652HE1, 167662HE2, 167652HE3, 167662HE4	230 V AC	150 s (90° rot.)	1	-

Wiring diagram

Actuator

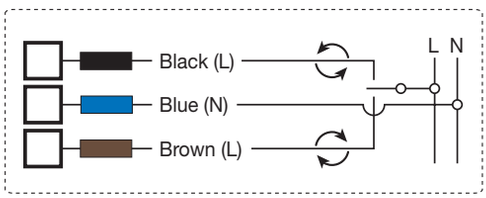



6370

Actuator for sector mixing valve, **proportional control**.
For mixing valves codes 610 from 1/2″ to 2″ and for unit 167 series.
Actuator torque 5 N·m.

Ambient temperature range: 0–55 °C
Protection class: IP 44
Supply cable length: 1,5 m
Control signal: 0 (2)–10 V, 0 (4)–20 mA, 0–5 V, 5–10 V

Code	Article use	Electric supply	Opening-Closing time		
637044	167654HE1, 167664HE2, 167654HE3, 167664HE4	24 V AC	75 s (90° rot.)	1	-

Wiring diagram

Actuator

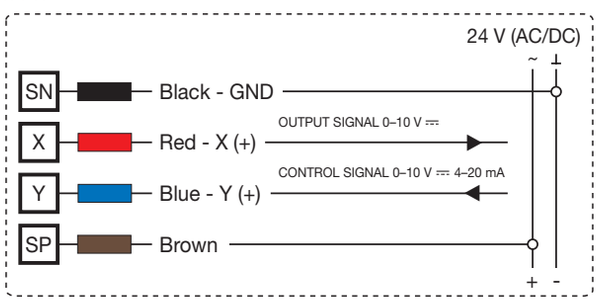

Regulators





161

Digital regulator with synoptic diagram **for heating and cooling**.
Complete with immersion flow probes with pocket and Pt1000 Ø 6 mm return probe (pocket to be chosen according to the pipe, see accessories).
Optional climatic probe.

Adjustment temperature range: 5–95 °C
Electric supply: 230 V AC
Protection class: IP 20
Probe/cable length: 1,5 m
Control signal: 3 point, 0–10 V

CE

Code		
161010	1	-





1520

Digital temperature controller for heating and cooling.
Complete with flow probe, outside probe and max. relative humidity probe.

Electric supply: 230 V AC
Running power consumption: 5,5 VA
Protection class: IP 40
Control signal: 3 point

CE

Code	Notes		
152021	1 channel	1	-





1520

Outside compensated digital temperature regulator, **only for heating**.
Complete with contact flow probe and outside probe.

Adjustment temperature range: 20–90 °C
Electric supply: 230 V AC
Protection class: IP 40
Control signal: 3 point

CE

Code	Notes		
152001	1 channel	1	-
152002	2 channels	1	-
152003	3 channels	1	-



161

Outside temperature probe.

Code		
161002	1	-



161

Pressure safety switch.
Complete with cable for wiring.

Medium temperature range: 5–100 °C
Supply cable length: 1 m
Adjustment pressure range: 0,5–10 bar

Code		
161003	1	-



161

Dew point detector.

Working range (humidity) UR: 30–100 %

Code		
161004	1	-



161

Remote regulator.
Functions:
- translation of the setting curves, from +15 K to -15 K;
- maximum temperature;
- position OFF.

Code		
161005	1	-



161

Pt1000 probe, Ø6 mm.

Code	Notes	Article use		
161006	L 45 mm, L cable 2,5 m	161010	1	-
161015	L 20 mm, L cable 1,5 m	161010	1	-



161

Pt1000 contact probe for pipes, Ø 6 mm.

Code	Notes	Article use		
161012	L cable 2,5 m	161010	1	-



161

Pt1000 probe pocket, size 1/2" M.

Code	Notes	Article use		
161013	L 60 mm	161010	1	-
161014	L 100 mm	161010, 150006, 257006	1	-

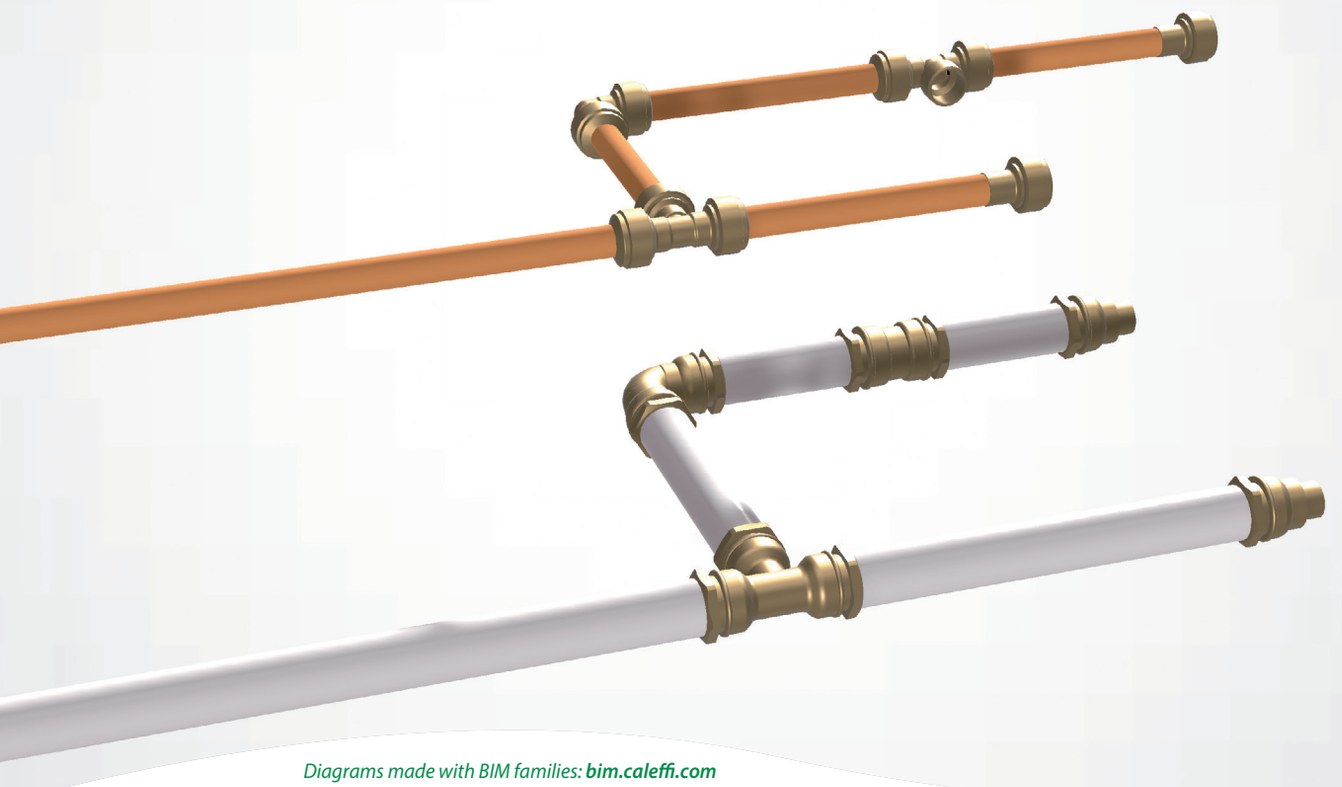

Diagrams made with BIM families: ***bim.caleffi.com***

Fittings for pipe connections

FITTINGS FOR PIPE CONNECTIONS

for gas and hydrocarbons - EN 549 standard

for hydraulic and domestic water systems - EN 681.1 standard

Fittings highlighted in yellow are supplied with two O-Rings:
yellow to be used for gas and fluid hydrocarbons - black to be used for hydraulic systems.

To be used for gas systems with power output up to 35 kW, according to UNI 7129-2015 standard only.

Three-piece fittings

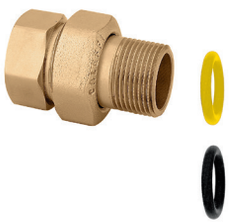

588

Three-piece union fitting.
For gas and fluid hydrocarbons: yellow O-Ring according to EN 549 standard.
Temperature range: -20–100 °C.
For hydraulic and domestic water systems: black O-Ring according to EN 681.1 standard.

Maximum working pressure: 16 bar
Medium temperature range: -25–120 °C

Code	Connection 1	Connection 2		
588030	3/8″ F	3/8″ M	1	50
588040	1/2″ F	1/2″ M	1	50
588050	3/4″ F	3/4″ M	1	25
588060	1″ F	1″ M	1	20
588070	1 1/4″ F	1 1/4″ M	1	10
588080	1 1/2″ F	1 1/2″ M	1	-
588090	2″ F	2″ M	1	-



588

Three-piece union fitting.
For hydraulic and domestic water systems (Black O-Ring conforms to standard EN 681.1).

Maximum working pressure: 16 bar
Medium temperature range: -25–120 °C

Code	Connection 1	Connection 2		
588031	3/8″ F	3/8″ M	1	50
588041	1/2″ F	1/2″ M	1	50
588051	3/4″ F	3/4″ M	1	25
588061	1″ F	1″ M	1	20
588071	1 1/4″ F	1 1/4″ M	1	10
588081	1 1/2″ F	1 1/2″ M	1	-
588091	2″ F	2″ M	1	-

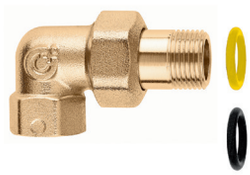

5881

Three-piece elbow union fitting.
For gas and fluid hydrocarbons: yellow O-Ring according to EN 549 standard.
Temperature range: -20–100 °C.
For hydraulic and domestic water systems: black O-Ring according to EN 681.1 standard.

Maximum working pressure: 16 bar
Medium temperature range: -25–120 °C

Code	Connection 1	Connection 2		
588130	3/8″ F	3/8″ M	1	50
588140	1/2″ F	1/2″ M	1	25
588150	3/4″ F	3/4″ M	1	25
588160	1″ F	1″ M	1	15
588170	1 1/4″ F	1 1/4″ M	1	10

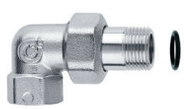

5881

Three-piece elbow union fitting.
For hydraulic and domestic water systems (Black O-Ring conforms to standard EN 681.1).

Maximum working pressure: 16 bar
Medium temperature range: -25–120 °C

Code	Connection 1	Connection 2		
588131	3/8″ F	3/8″ M	1	50
588141	1/2″ F	1/2″ M	1	25
588151	3/4″ F	3/4″ M	1	25
588161	1″ F	1″ M	1	15
588171	1 1/4″ F	1 1/4″ M	1	10

Unions



Flat seat union with gasket.
For 5350, 5350..H, 5351, 5360 and 5365 series.

Code	nut connection	tailpiece connection		
R59787	3/4″ F	1/2″ M	1	-
R59788	1″ F	3/4″ M	1	-
R59789	1 1/4″ F	1″ M	1	-
R59485	1 1/2″ F	1 1/4″ M	1	-
R59581	2″ F	1 1/2″ M	1	-
R59487	2 1/2″ F	2″ M	1	-

Fittings for PE-X pipes



930

Male elbow fitting with wall connection.
Compatible with fittings 347, 438 and 680 series for water installation.

Code	Connection 1	Connection 2		
930418	1/2" F	23 p. 1,5 M	5	-



940

Male-male fitting.
Can be coupled with 680 and 679 series fittings.

Code	Connection 1	Connection 2		
940300	3/8" M	23 p. 1,5	1	50
940400	1/2" M	23 p. 1,5	1	50
940450	1/2" M	3/4" M	1	50
940500	3/4" M	23 p. 1,5	1	50



941

Female fitting.
Can be coupled with 680 and 679 series fittings.

Code	Connection 1	Connection 2		
941300	3/8" F	23 p. 1,5	1	50
941400	1/2" F	23 p. 1,5	1	50
941450	1/2" F	3/4" M	1	50
941500	3/4" F	23 p. 1,5	1	50
941550	3/4" F	3/4" M	1	50
941560	3/4" F	1" M	1	50



942

Sleeve.
Can be coupled with 680 and 679 series fittings

Code	Connection 1	Connection 2		
942000	23 p. 1,5	23 p. 1,5	1	50
942550	3/4" M	3/4" M	1	50
942560	3/4" M	1" M	1	50



943

Elbow fitting.
Can be coupled with 680 and 679 series fittings.

Code	Connection 1	Connection 2		
943000	23 p. 1,5	23 p. 1,5	1	50
943550	3/4" M	3/4" M	1	50



944

Male elbow fitting.
Can be coupled with 680 and 679 series fittings.

Code	Connection 1	Connection 2		
944400	1/2" M	23 p. 1,5	1	50



945

Female elbow fitting.
Can be coupled with 680 and 679 series fittings.

Code	Connection 1	Connection 2		
945400	1/2" F	23 p. 1,5	1	50
945550	3/4" F	3/4" M	1	50



946

Tee piece.
Can be coupled with 680 and 679 series fittings.

Code	Connection	Connection 1	Connection 2		
946000	23 p. 1,5	23 p. 1,5	23 p. 1,5	1	50
946500	3/4" M	3/4" M	3/4" M	1	25



947

Side male tee piece.
Can be coupled with 680 and 679 series fittings.

Code	Connection	Connection 1	Connection 2		
947400	23 p. 1,5	23 p. 1,5	1/2" M	1	50
947500	3/4" M	3/4" M	3/4" M	1	-



948

Central male tee piece.
Can be coupled with 680 and 679 series fittings.

Code	Connection	Connection 1	Connection 2		
948400	23 p. 1,5	1/2" M	23 p. 1,5	1	50

Compression fittings with O-ring seal

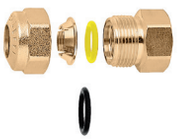

900

Female fitting.
For annealed copper, hard copper, brass, mild steel and stainless steel pipes.
With double O-Ring.
Conforms to standard UNI EN 1254-4.
For gas and fluid hydrocarbon systems (yellow O-ring conforms to standard EN 549).
For hydraulic and domestic water systems (Black o-ring conforms to standard EN 681.1).
Note (*): to be used only with water and non-dangerous glycol solutions.

Maximum working pressure: 16 bar
Medium temperature range: -25–120 °C

Code	Connection	Pipe connection	Notes		
900308	3/8″ F	Ø 8	-	1	50
900310	3/8″ F	Ø 10	-	1	50
900312	3/8″ F	Ø 12	-	1	50
900314	3/8″ F	Ø 14	-	1	50
900410	1/2″ F	Ø 10	-	1	50
900412	1/2″ F	Ø 12	-	1	50
900414	1/2″ F	Ø 14	-	1	50
900415	1/2″ F	Ø 15	-	1	50
900416	1/2″ F	Ø 16	-	1	50
900418	1/2″ F	Ø 18	-	1	25
900516	3/4″ F	Ø 16	-	1	50
900518	3/4″ F	Ø 18	-	1	25
900522	3/4″ F	Ø 22	-	1	25
900622	1″ F	Ø 22	-	1	25
900628	1″ F	Ø 28	(*)	1	25



903

Coupling sleeve.
For annealed copper, hard copper, brass, mild steel and stainless steel pipes.
Conforms to standard UNI EN 1254-2.
For hydraulic and domestic water systems: black o-ring conforms to standard EN 681.1.

Maximum working pressure: 16 bar
Medium temperature range: -25–120 °C

Code	Pipe diameter		
903008	Ø 8	1	50
903010	Ø 10	1	50
903012	Ø 12	1	50
903014	Ø 14	1	50
903015	Ø 15	1	50
903016	Ø 16	1	50
903018	Ø 18	1	25
903022	Ø 22	1	25

O-Ring seal
The hydraulic tightness between the two fitting components is a tapered type with O-Ring.
This allows to screw the fitting up smoothly with a full safety warranty.

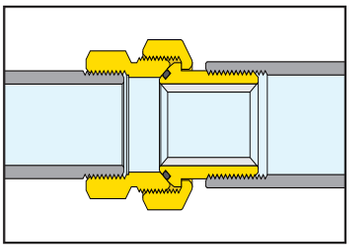



904

Male fitting.
For annealed copper, hard copper, brass, mild steel and stainless steel pipes.
With double O-Ring.
Conforms to standard UNI EN 1254-4.
For gas and fluid hydrocarbon systems (yellow O-ring conforms to standard EN 549).
For hydraulic and domestic water systems (Black o-ring conforms to standard EN 681.1).
Note (*): to be used only with water and non-dangerous glycol solutions.

Maximum working pressure: 16 bar
Medium temperature range: -25–120 °C

Code	Connection	Pipe diameter	Notes		
904308	3/8″ M	Ø 8	-	1	50
904310	3/8″ M	Ø 10	-	1	50
904312	3/8″ M	Ø 12	-	1	50
904314	3/8″ M	Ø 14	-	1	50
904410	1/2″ M	Ø 10	-	1	50
904412	1/2″ M	Ø 12	-	1	50
904414	1/2″ M	Ø 14	-	1	50
904415	1/2″ M	Ø 15	-	1	50
904416	1/2″ M	Ø 16	-	1	50
904418	1/2″ M	Ø 18	-	1	25
904514	3/4″ M	Ø 14	-	1	50
904516	3/4″ M	Ø 16	-	1	50
904518	3/4″ M	Ø 18	-	1	25
904522	3/4″ M	Ø 22	-	1	25
904618	1″ M	Ø 18	-	1	25
904622	1″ M	Ø 22	-	1	25
904628	1″ M	Ø 28	(*)	1	10



9050

Elbow fitting.
For annealed copper, hard copper, brass, mild steel and stainless steel pipes.
Conforms to standard UNI EN 1254-4.
For hydraulic and domestic water systems: black O-Ring conforms to standard EN 681.1.

Maximum working pressure: 16 bar
Medium temperature range: -25–120 °C

Code	Pipe diameter		
905010	Ø 10	1	25
905012	Ø 12	1	25
905014	Ø 14	1	25
905015	Ø 15	1	25
905016	Ø 16	1	25
905018	Ø 18	1	25
905022	Ø 22	1	25



9057

Male elbow fitting.
For annealed copper, hard copper, brass, mild steel and stainless steel pipes.
With double O-ring.
Conforms to standard UNI EN 1254-4.
For gas and fluid hydrocarbon systems (yellow O-ring conforms to standard EN 549).
For hydraulic and domestic water systems (black O-ring conforms to standard EN 681.1).

Maximum working pressure: 16 bar
Medium temperature range: -25–120 °C

Code	Connection	Pipe diameter		
905730	3/8" M	Ø 10	1	25
905732	3/8" M	Ø 12	1	25
905740	1/2" M	Ø 10	1	25
905742	1/2" M	Ø 12	1	25
905744	1/2" M	Ø 14	1	25
905745	1/2" M	Ø 15	1	25
905746	1/2" M	Ø 16	1	25
905748	1/2" M	Ø 18	1	25
905756	3/4" M	Ø 16	1	25
905758	3/4" M	Ø 18	1	25
905752	3/4" M	Ø 22	1	25

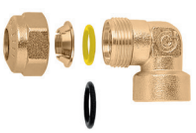

9058

Female elbow fitting.
For annealed copper, hard copper, brass, mild steel and stainless steel pipes.
With double O-ring.
Conforms to standard UNI EN 1254-4.
For gas and fluid hydrocarbon systems (yellow O-ring conforms to standard EN 549).
For hydraulic and domestic water systems (black O-ring conforms to standard EN 681.1).

Maximum working pressure: 16 bar
Medium temperature range: -25–120 °C

Code	Connection	Pipe diameter		
905830	3/8" F	Ø 10	1	25
905832	3/8" F	Ø 12	1	25
905840	1/2" F	Ø 10	1	25
905842	1/2" F	Ø 12	1	25
905844	1/2" F	Ø 14	1	25
905845	1/2" F	Ø 15	1	25
905846	1/2" F	Ø 16	1	25
905848	1/2" F	Ø 18	1	25
905856	3/4" F	Ø 16	1	25
905858	3/4" F	Ø 18	1	25
905852	3/4" F	Ø 22	1	25



9060

Tee fitting.
For annealed copper, hard copper, brass, mild steel and stainless steel pipes.
Conforms to standard UNI EN 1254-4.
For hydraulic and domestic water systems (Black O-ring conforms to standard EN 681.1).

Maximum working pressure: 16 bar
Medium temperature range: -25–120 °C

Code	Pipe diameter		
906010	Ø 10	1	25
906012	Ø 12	1	25
906014	Ø 14	1	25
906015	Ø 15	1	25
906016	Ø 16	1	25
906018	Ø 18	1	25
906022	Ø 22	1	20



9067

Male tee fitting.
For annealed copper, hard copper, brass, mild steel and stainless steel pipes.
Conforms to standard UNI EN 1254-4.
For hydraulic and domestic water systems.
(Black O-ring conforms to standard EN 681.1).

Maximum working pressure: 16 bar
Medium temperature range: -25–120 °C

Code	Connection	Pipe diameter		
906740	1/2" M	Ø 10	1	25
906742	1/2" M	Ø 12	1	25
906744	1/2" M	Ø 14	1	25
906745	1/2" M	Ø 15	1	25
906746	1/2" M	Ø 16	1	25
906758	3/4" M	Ø 18	1	25
906752	3/4" M	Ø 22	1	20



9068

Female tee fitting.
For annealed copper, hard copper, brass, mild steel and stainless steel pipes.
Conforms to standard UNI EN 1254-4.
For hydraulic and domestic water systems.
(black O-ring conforms to standard EN 681.1).

Maximum working pressure: 16 bar
Medium temperature range: -25–120 °C

Code	Connection	Pipe diameter		
906830	3/8″ F	Ø 10	1	25
906832	3/8″ F	Ø 12	1	25
906840	1/2″ F	Ø 10	1	25
906842	1/2″ F	Ø 12	1	25
906844	1/2″ F	Ø 14	1	25
906845	1/2″ F	Ø 15	1	25
906846	1/2″ F	Ø 16	1	25
906858	3/4″ F	Ø 18	1	25
906852	3/4″ F	Ø 22	1	20



930

Elbow fitting with wall connection.
For annealed copper, hard copper, brass, mild steel and stainless steel pipes.
With double O-Ring.
Conforms to standard UNI EN 1254-4.
For gas and fluid hydrocarbon systems
(yellow O-Ring conforms to standard EN 549).
For hydraulic and domestic water systems
(black O-ring conforms to standard EN 681.1).

Maximum working pressure: 16 bar
Medium temperature range: -25–120 °C

Code	Connection	Pipe diameter		
930412	1/2″ F	Ø 12	1	25
930414	1/2″ F	Ø 14	1	25
930416	1/2″ F	Ø 16	1	25



910

Female fitting.
For annealed copper, hard copper, brass, mild steel and stainless steel pipes.
Conforms to standard UNI EN 1254-4.
For hydraulic and domestic water systems.
(black O-ring conforms to standard EN 681.1).

Maximum working pressure: 16 bar
Medium temperature range: -25–120 °C
Finish: chrome plated

Code	Connection	Pipe diameter		
910310	3/8″ F	Ø 10	1	50
910312	3/8″ F	Ø 12	1	50
910314	3/8″ F	Ø 14	1	50
910410	1/2″ F	Ø 10	1	50
910412	1/2″ F	Ø 12	1	50
910414	1/2″ F	Ø 14	1	50
910415	1/2″ F	Ø 15	1	50



914

Male fitting.
For annealed copper, hard copper, brass, mild steel and stainless steel pipes.
Conforms to standard UNI EN 1254-4.
For hydraulic and domestic water systems.
(black O-Ring conforms to standard EN 681.1).

Maximum working pressure: 16 bar
Medium temperature range: -25–120 °C
Finish: chrome plated

Code	Connection	Pipe diameter		
914310	3/8″ M	Ø 10	1	50
914312	3/8″ M	Ø 12	1	50
914314	3/8″ M	Ø 14	1	50
914410	1/2″ M	Ø 10	1	50
914412	1/2″ M	Ø 12	1	50
914414	1/2″ M	Ø 14	1	50
914415	1/2″ M	Ø 15	1	50



913

Coupling sleeve.
For annealed copper, hard copper, brass, mild steel and stainless steel pipes.
Conforms to standard UNI EN 1254-4.
For hydraulic and domestic water systems.
(Black O-ring conforms to standard EN 681.1).

Maximum working pressure: 16 bar
Medium temperature range: -25–120 °C

Code	Pipe diameter		
913010	Ø 10	1	50
913012	Ø 12	1	50
913014	Ø 14	1	50

Mechanical fittings with O-ring seal are not suitable for use with fuel added with RME (Rape Methyl ester)

Spare parts for mechanical fittings with O-ring seal



Spare O-Ring.
For 900, 903, 904, 9050, 9057, 9058, 9060, 9067, 9068, 930, 910, 913 and 914 series mechanical fittings.
For hydraulic systems and for human consumption.

Code	Notes	Ø (mm)		
R97020	-	8	1	-
R97022	only for codes 900310, 903010, 904310, 910310, 913010 e 914310.	10	1	-
R97021	-	10	1	-
R97023	-	12	1	-
R97024	-	14	1	-
R47037	-	15	1	-
R97025	-	16	1	-
R97026	-	18	1	-
R97027	-	22	1	-



Spare O-Ring.
For 900, 904, 910310, 9057, 9058, 930 series mechanical fittings.
For gas and liquid fuel systems (not including gasoline).

Code	Notes	Ø (mm)		
R97012	-	10	1	-
R97013	only for codes 900310, 904310, 905730 e 905830.	10	1	-
R97014	-	12	1	-
R97015	-	14	1	-
R97016	-	15	1	-
R97017	-	16	1	-
R97018	-	18	1	-
R97019	-	22	1	-



Spare locking ring.
For 900, 903, 904, 9050, 9057, 9058, 9060, 9067, 9068, 930, 910, 913 and 914 series mechanical fittings.

Code	Notes	Ø (mm)		
R91236	-	8	1	-
R91237	only for codes 900310, 903010, 904310, 910310, 913010 e 914310.	10	1	-
R91238	-	10	1	-
R91239	-	12	1	-
R41423	-	14	1	-
R41424	-	15	1	-
R91240	-	16	1	-
R41448	-	18	1	-
R91235	-	22	1	-
R91241	-	28	1	-

Fittings for polyethylene pipes



860

Female fitting.
For polyethylene pipes.

Maximum working pressure: 16 bar
Medium temperature range: 0–40 °C
Material: brass

Code	Pipe diameter	Connection	Notes		
860420	Ø 20	Rp 1/2″ F	-	12	60
860421	Ø 21	1/2″ F	without DVGW and SVGW certifications	12	60
860525	Ø 25	Rp 3/4″ F	-	10	50
860527	Ø 27	3/4″ F	without DVGW and SVGW certifications	10	50
860625	Ø 25	Rp 1″ F	-	10	60
860632	Ø 32	Rp 1″ F	-	10	50
860634	Ø 34	1″ F	without DVGW and SVGW certifications	10	50
860740	Ø 40	Rp 1 1/4″ F	-	10	50
860850	Ø 50	Rp 1 1/2″ F	-	5	25
860963	Ø 63	Rp 2″ F	-	1	8



860

Female fitting.
Stainless steel tie-rods.
For polyethylene pipes.

Maximum working pressure: 10 bar
Medium temperature range: 0–40 °C
Material: cast iron

Code	Pipe connection	Connection		
860075	Ø 75	Rp 2 1/2″ F	1	-
860090	Ø 90	Rp 3″ F	1	-
860110	Ø 110	Rp 4″ F	1	-



875

Reduced female fitting.
For polyethylene pipes.

Maximum working pressure: 16 bar
Medium temperature range: 0–40 °C
Material: brass

Code	Pipe diameter	Connection		
875425	Ø 25	Rp 1/2″ F	10	50
875532	Ø 32	Rp 3/4″ F	10	50
875640	Ø 40	Rp 1″ F	10	50



861

Male fitting.
For polyethylene pipes.

Maximum working pressure: 16 bar
Medium temperature range: 0–40 °C
Material: brass

Code	Pipe diameter	Connection	Notes		
861420	Ø 20	1/2″ M	-	12	60
861421	Ø 21	1/2″ M	without DVGW and SVGW certifications	12	60
861525	Ø 25	3/4″ M	-	10	50
861527	Ø 27	3/4″ M	without DVGW and SVGW certifications	10	50
861625	Ø 25	1″ M	-	10	60
861632	Ø 32	1″ M	-	10	50
861634	Ø 34	1″ M	without DVGW and SVGW certifications	10	50
861740	Ø 40	1 1/4″ M	-	10	50
861850	Ø 50	1 1/2″ M	-	5	25
861963	Ø 63	2″ M	-	1	8



861

Male fitting.
Stainless steel tie-rods.
For polyethylene pipes.

Maximum working pressure: 10 bar
Medium temperature range: 0–40 °C
Material: cast iron

Code	Pipe diameter	Connection		
861075	Ø 75	2 1/2″ M	1	-
861090	Ø 90	3″ M	1	-
861110	Ø 110	4″ M	1	-



876

Female fitting with union.
For polyethylene pipes.

Maximum working pressure: 16 bar
Medium temperature range: 0–40 °C
Material: brass

Code	Pipe diameter	Connection		
876520	Ø 20	Rp 3/4″ F	15	75
876525	Ø 25	Rp 3/4″ F	12	60
876625	Ø 25	Rp 1″ F	12	60
876632	Ø 32	Rp 1″ F	10	50



862

Reduced male fitting.
For polyethylene pipes.

Maximum working pressure: 16 bar
Medium temperature range: 0–40 °C
Material: brass

Code	Pipe diameter	Connection		
862320	Ø 20	3/8″ M	12	60
862425	Ø 25	1/2″ M	10	50
862532	Ø 32	3/4″ M	10	50
862640	Ø 40	1″ M	10	50
862750	Ø 50	1 1/4″ M	5	25
862863	Ø 63	1 1/2″ M	1	8



888

Flanged fitting, PN 10 EN 1092-1.
For polyethylene pipes.

Maximum working pressure: 10 bar
Medium temperature range: 0–40 °C
Material: cast iron

Code	Pipe diameter	Connection		
888075	Ø 75	DN 65 - PN 10	1	-
888090	Ø 90	DN 80 - PN 10	1	-
888110	Ø 110	DN 100 - PN 10	1	-
888125	Ø 125	DN 100 - PN 10	1	-



863

Sleeve coupling.
For polyethylene pipes.

Maximum working pressure: 16 bar
Medium temperature range: 0–40 °C
Material: brass

Code	Pipe diameter	Notes		
863020	Ø 20	-	15	75
863021	Ø 21	without DVGW and SVGW certifications	15	75
863025	Ø 25	-	12	60
863027	Ø 27	without DVGW and SVGW certifications	10	50
863032	Ø 32	-	10	50
863034	Ø 34	without DVGW and SVGW certifications	5	25
863040	Ø 40	-	5	25
863050	Ø 50	-	5	25
863063	Ø 63	-	1	6



863

Sleeve coupling.
For polyethylene pipes. Stainless steel tie-rods.

Maximum working pressure: 10 bar
Medium temperature range: 0–40 °C
Material: cast iron

Code	Pipe diameter		
863075	Ø 75	1	-
863090	Ø 90	1	-
863110	Ø 110	1	-
863125	Ø 125	1	-



864

Tee fitting.
For polyethylene pipes.

Maximum working pressure: 16 bar
Medium temperature range: 0–40 °C
Material: brass

Code	Pipe diameter	Notes		
864020	Ø 20	-	10	50
864021	Ø 21	without DVGW and SVGW certifications	10	50
864025	Ø 25	-	10	50
864027	Ø 27	without DVGW and SVGW certifications	5	25
864032	Ø 32	-	5	25
864034	Ø 34	without DVGW and SVGW certifications	4	20
864040	Ø 40	-	1	5
864050	Ø 50	-	1	5
864063	Ø 63	-	1	5



865

Reduced male-female tee fitting.
For polyethylene pipes.

Maximum working pressure: 16 bar
Medium temperature range: 0–40 °C
Material: brass

Code	Connection 1	Connection 2		
865420	1/2″ M, Ø 20	3/8″ F	10	50
865525	3/4″ M, Ø 25	1/2″ F	10	50
865632	1″ M, Ø 32	3/4″ F	5	25
865740	1 1/4″ F, Ø 40	1″ F	1	5
865850	1 1/2″ M, Ø 50	1 1/4″ F	1	5
865963	2″ M, Ø 63	1 1/2″ F	1	5



866

Elbow fitting.
For polyethylene pipes.

Maximum working pressure: 16 bar
Medium temperature range: 0–40 °C
Material: brass

Code	Pipe diameter		
866020	Ø 20	10	50
866025	Ø 25	10	50
866032	Ø 32	5	25
866040	Ø 40	4	20
866050	Ø 50	3	15
866063	Ø 63	1	5



867

Male elbow fitting.
For polyethylene pipes.

Maximum working pressure: 16 bar
Medium temperature range: 0–40 °C
Material: brass

Code	Pipe diameter	Connection		
867420	Ø 20	1/2″ M	10	50
867525	Ø 25	3/4″ M	10	50
867632	Ø 32	1″ M	10	50
867740	Ø 40	1 1/4″ M	4	20
867850	Ø 50	1 1/2″ M	4	20
867963	Ø 63	2″ M	1	5



868

Female elbow fitting.
For polyethylene pipes.

Maximum working pressure: 16 bar
Medium temperature range: 0–40 °C
Material: brass

Code	Pipe diameter	Connection		
868420	Ø 20	Rp 1/2″ F	10	50
868525	Ø 25	Rp 3/4″ F	10	50
868632	Ø 32	Rp 1″ F	10	50
868740	Ø 40	Rp 1 1/4″ F	4	20
868850	Ø 50	Rp 1 1/2″ F	4	20
868963	Ø 63	Rp 2″ F	1	5



869

Female elbow fitting with wall connections.
For polyethylene pipes.

Maximum working pressure: 16 bar
Medium temperature range: 0–40 °C
Material: brass

Code	Pipe diameter	Connection		
869420	Ø 20	Rp 1/2″ F	5	25
869425	Ø 25	Rp 1/2″ F	4	20
869525	Ø 25	Rp 3/4″ F	4	20



870

Coupling sleeve, for repairs, brass body.
For polyethylene pipes.
Allows pipe repairs with a maximum distance of 50 mm between pipe ends.

Maximum working pressure: 16 bar
Medium temperature range: 0–40 °C
Material: brass

Code	Pipe diameter		
870025	Ø 25	10	50
870032	Ø 32	5	25
870040	Ø 40	4	20
870050	Ø 50	3	15



871

Fitting with ball valve.
For polyethylene pipes.

Maximum working pressure: 16 bar
Medium temperature range: 0–40 °C
Material: brass

Code	Pipe diameter	Connection		
871425	Ø 25	Rp 1/2″ F	10	50
871525	Ø 25	Rp 3/4″ F	5	25
871532	Ø 32	Rp 3/4″ F	5	25



960

Female fitting.
For polyethylene pipes.

Maximum working pressure: 16 bar
Medium temperature range: 2–40 °C
Material: dezincification resistant brass DR

Code	Inlet connection	Outlet connection		
960420	Rp 1/2" F, Ø 20	Rp 1/2" F, Ø 20	12	60
960525	Rp 3/4" F, Ø 25	Rp 3/4" F, Ø 25	10	50
960625	Rp 1" F, Ø 25	Rp 1" F, Ø 25	10	60
960632	Rp 1" F, Ø 32	Rp 1" F, Ø 32	10	50
960740	Rp 1 1/4" F, Ø 40	Rp 1 1/4" F, Ø 40	10	50
960850	Rp 1 1/2" F, Ø 50	Rp 1 1/2" F, Ø 50	5	25
960963	Rp 2" F, Ø 63	Rp 2" F, Ø 63	1	8



975

Reduced female fitting.
For polyethylene pipes.

Maximum working pressure: 16 bar
Medium temperature range: 1–40 °C

Code	Inlet connection	Outlet connection		
975532	Ø 32	Rp 3/4" F	10	50
975640	Ø 40	Rp 1" F	10	50
975732	Ø 32	Rp 1 1/4" F	10	50
975750	Ø 50	Rp 1 1/4" F	5	25



961

Male fitting.
For polyethylene pipes.

Maximum working pressure: 16 bar
Medium temperature range: 2–40 °C
Material: dezincification resistant brass DR

Code	Inlet connection	Outlet connection		
961420	1/2" M, Ø 20	1/2" M, Ø 20	12	60
961520	3/4" M, Ø 20	3/4" M, Ø 20	10	50
961525	3/4" M, Ø 25	3/4" M, Ø 25	10	50
961625	Ø 25	1" M	10	60
961632	1" M, Ø 32	1" M, Ø 32	10	50
961732	1 1/4" M, Ø 32	1 1/4" M, Ø 32	10	50
961740	1 1/4" M, Ø 40	1 1/4" M, Ø 40	6	30
961840	1 1/2" M, Ø 40	1 1/2" M, Ø 40	5	25
961850	1 1/2" M, Ø 50	1 1/2" M, Ø 50	5	25
961950	2" M, Ø 50	2" M, Ø 50	1	8
961963	2" M, Ø 63	2" M, Ø 63	1	10



962

Reduced male fitting.
For polyethylene pipes.

Maximum working pressure: 16 bar
Medium temperature range: 2–40 °C
Material: dezincification resistant brass DR

Code	Inlet connection	Outlet connection		
962532	3/4" M, Ø 32	3/4" M, Ø 32	10	50
962640	1" M, Ø 40	1" M, Ø 40	6	30



963

Sleeve fitting.
For polyethylene pipes.

Maximum working pressure: 16 bar
Medium temperature range: 2–40 °C
Material: dezincification resistant brass DR

Code	Connection		
963020	Ø 20	15	75
963025	Ø 25	12	60
963032	Ø 32	10	50
963040	Ø 40	5	20
963050	Ø 50	5	25
963063	Ø 63	1	6



964

Tee fitting.
For polyethylene pipes.

Maximum working pressure: 16 bar
Medium temperature range: 2–40 °C
Material: dezincification resistant brass DR

Code	Connection		
964020	Ø 20	10	50
964025	Ø 25	6	30
964032	Ø 32	5	25
964040	Ø 40	1	5
964050	Ø 50	1	5



966

Elbow fitting.
For polyethylene pipes.

Maximum working pressure: 16 bar
Medium temperature range: 2–40 °C
Material: dezincification resistant brass DR

Code	Connection		
966025	Ø 25	10	50
966032	Ø 32	5	25
966040	Ø 40	4	20



967

Male elbow fitting.
For polyethylene pipes.

Maximum working pressure: 16 bar
Medium temperature range: 2–40 °C
Material: dezincification resistant brass DR

Code	Inlet connection	Outlet connection		
967632	1″ M, Ø 32	1″ M, Ø 32	10	50



968

Female elbow fitting.
For polyethylene pipes.

Maximum working pressure: 16 bar
Medium temperature range: 2–40 °C
Material: dezincification resistant brass DR

Code	Inlet connection	Outlet connection		
968632	Rp 1″ F, Ø 32	Rp 1″ F, Ø 32	10	50
968740	Rp 1 1/4″ F, Ø 40	Rp 1 1/4″ F, Ø 40	4	20



970

Long sleeve fitting.
For polyethylene pipes. Allows pipe repairs with a maximum distance of 50 mm between pipe ends.

Maximum working pressure: 16 bar
Medium temperature range: 1–40 °C

Code	Connection		
970032	Ø 32	5	25
970040	Ø 40	5	-
970050	Ø 50	4	-



986

Reduction kit.

Code	Inlet connection	Outlet connection		
986032	Ø 32	Ø 25	1	-
986043	Ø 40	Ø 32	1	-
986053	Ø 50	Ø 32	1	-
986054	Ø 50	Ø 40	1	-



980

Kit.

Code	Connection		
980025	Ø 25	100	-
980032	Ø 32	100	-
980040	Ø 40	50	-
980050	Ø 50	50	-
980063	Ø 63	50	-

Fittings for iron pipes



890

Female fitting.

Maximum working pressure: 16 bar
Medium temperature range: 0–40 °C
Material: brass

Code	Pipe diameter	Connection		
890421	Ø 21	1/2″ F	12	60
890527	Ø 27	3/4″ F	10	50
890634	Ø 34	1″ F	10	50



891

Male fitting.

Maximum working pressure: 16 bar
Medium temperature range: 0–40 °C
Material: brass

Code	Pipe diameter	Connection		
891421	Ø 21	1/2″ M	12	60
891527	Ø 27	3/4″ M	10	50
891634	Ø 34	1″ M	10	50



893

Sleeve fitting.
For steel pipes.
Without stop for as a repair joint.
Can join the pipe with a maximum gap of 15 mm between the ends.

Maximum working pressure: 16 bar
Medium temperature range: 0–40 °C
Material: brass

Code	Pipe diameter		
893021	Ø 21	15	75
893027	Ø 27	10	50
893034	Ø 34	5	25



894

Tee fitting.

Maximum working pressure: 16 bar
Medium temperature range: 0–40 °C
Material: brass

Code	Pipe diameter		
894021	Ø 21	10	50
894027	Ø 27	5	25
894034	Ø 34	4	20

Accessories and spare parts for deca-fittings



886

Reduction kit.

Code	Notes		
886022	from Ø25 to Ø20	1	-
886032	from Ø32 to Ø25	1	-
886043	from Ø40 to Ø32	1	-
886054	from Ø50 to Ø40	1	-
886065	from Ø63 to Ø50	1	-



887

Pipe stiffener.

Code	Pipe diameter	Notes		
887120	Ø 20x2	for PN 10 series	10	-
887223	Ø 25x2,3	for PN 10 series	10	-
887330	Ø 32x3	for S 5 PN 4 series	10	-
887437	Ø 40x3,7	for S 5 PN 4 series	5	-
887546	Ø 50x4,6	for S 5 PN 4 series	5	-
887658	Ø 63x5,8	for S 5 PN 4 series	5	-
887128	Ø 20x2,8	for REHAU pipes	10	-
887235	Ø 25x3,5	for REHAU pipes	10	-
887130	Ø 20x3	for S 5 PN 4 series	10	-
887230	Ø 25x3	for S 5 PN 4 series	10	-
887430	Ø 40x3	for S 8 PN 2,5–4 series	5	-
887530	Ø 50x3	for S 8 PN 2,5–4 series	10	-
887636	Ø 63x3,6	for S 8 PN 2,5–4 series	5	-



877

Pipe clenching ring.
Not chrome plated.

Code	Ø (mm)	Material		
877020	20	brass	50	-
877021	21	brass	1	-
877121	21	stainless steel	1	-
877025	25	brass	50	-
877027	27	brass	1	-
877127	27	stainless steel	1	-
877032	32	brass	50	-
877034	34	brass	1	-
877134	34	stainless steel	1	-
877040	40	brass	1	-
877050	50	brass	1	-
877063	63	brass	1	-



878

Brass washer.

Code	Ø (mm)		
878020	20	50	-
878021	21	1	-
878025	25	50	-
878027	27	1	-
878032	32	50	-
878034	34	1	-
878040	40	1	-
878050	50	1	-
878063	63	1	-



879

O-Ring.

Code	Ø (mm)		
879020	20	50	500
879021	21	1	-
879025	25	50	500
879027	27	1	-
879032	32	50	500
879034	34	1	-
879040	40	1	-
879050	50	1	-
879063	63	1	-

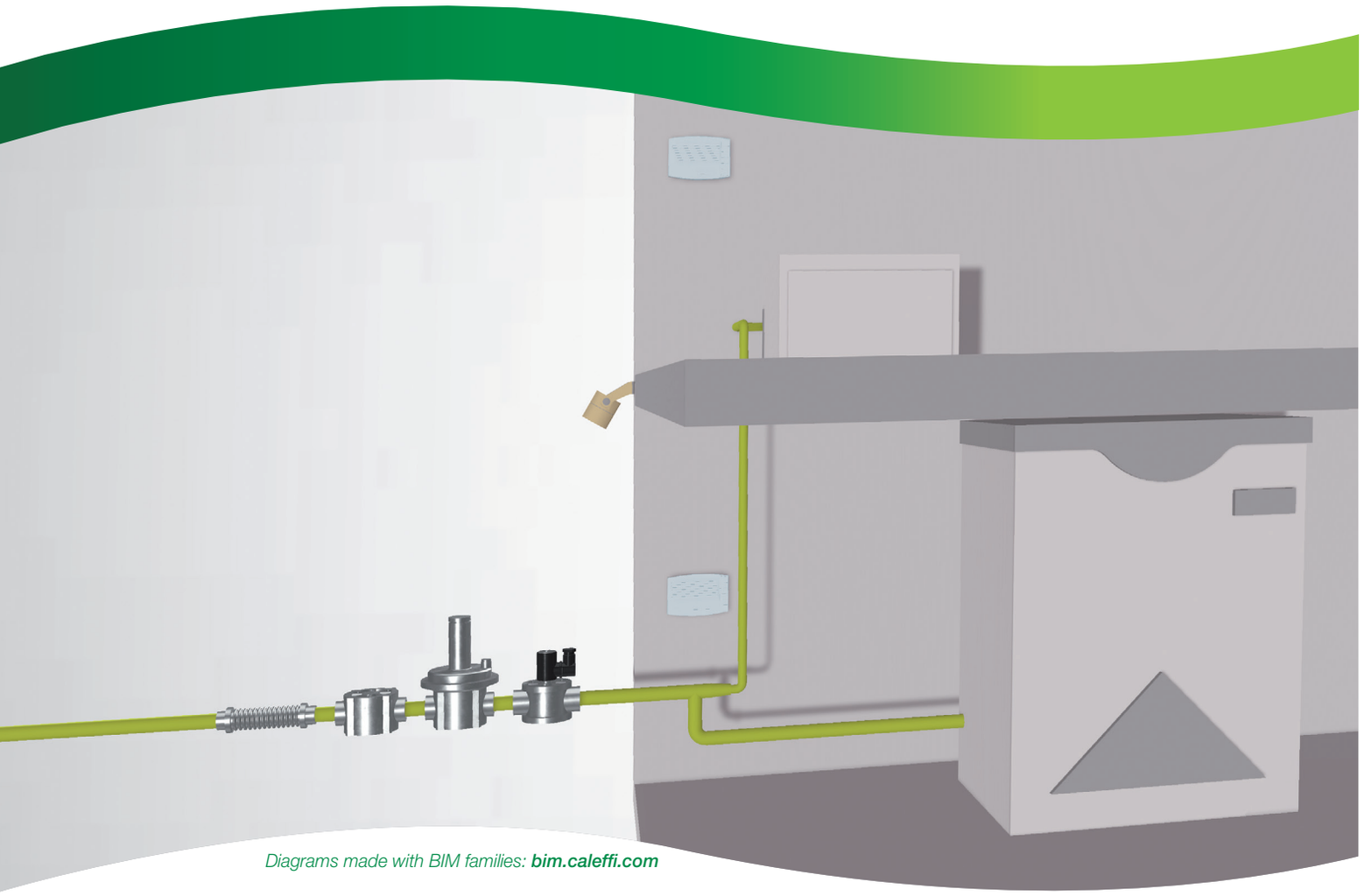

Diagrams made with BIM families: ***bim.caleffi.com***

Gas filters and regulators
Gas solenoid valves
Gas control devices and accessories

GAS FILTERS AND REGULATORS

Gas filters



847

Compact gas filter.
Filtering capacity: Ø ≥ 50 µm.

Maximum working pressure: 2 bar
Gas filtration class: G2 (according to EN 779)

CE

Code	Connection		
847004	Rp 1/2" F	1	20
847005	Rp 3/4" F	1	20



848

Gas filter.
Filtering capacity: Ø ≥ 50 µm.

Maximum working pressure: 2 bar
Gas filtration class: G2 (according to EN 779)

CE

Code	Connection		
848004	Rp 1/2" F	1	30
848005	Rp 3/4" F	1	30
848006	Rp 1" F	1	30
848007	Rp 1 1/4" F	1	15
848008	Rp 1 1/2" F	1	15
848009	Rp 2" F	1	10



848

Gas filter. Flanged connections.
To be coupled with flat counterflanges EN 1092-1.
Filtering capacity: Ø ≥ 50 µm.

Maximum working pressure: 2 bar
Gas filtration class: G2 (according to EN 779)

CE

Code	Connection		
848060	DN 65 - PN 16	1	-
848080	DN 80 - PN 16	1	-
848100	DN 100 - PN 16	1	-

Strandard gas filters and regulators



850

Gas pressure closing filter regulator, double diaphragm. Threaded connections.
Filtering capacity: Ø ≥ 50 µm.
Regulation and closing at null flow according to UNI EN 88.
Compliance with directive ATEX (II 2G - II 2D).

Maximum upstream pressure: 500 mbar
Medium temperature range: -15–60 °C
Gas filtration class: G2 (according to EN 779)

Ex CE

Code	Connection	Adjustment pressure range (mbar)		
850004	Rp 1/2" F	18–40	1	-
850005	Rp 3/4" F	18–40	1	-
850006	Rp 1" F	18–40	1	-
850007	Rp 1 1/4" F	13–23	1	-
850008	Rp 1 1/2" F	13–23	1	-
850009	Rp 2" F	13–23	1	-



850

Gas pressure closing filter regulator, double diaphragm. Flanged connections.
To be coupled with flat counterflanges EN 1092-1.
Filtering capacity: Ø ≥ 50 µm.
Regulation and closing at null flow according to UNI EN 88.
Compliance with directive ATEX (II 2G - II 2D).

Maximum upstream pressure: 500 mbar
Medium temperature range: -15–60 °C
Gas filtration class: G2 (according to EN 779)

Ex CE

Code	Connection	Adjustment pressure range (mbar)		
850060	DN 65 - PN 16	13–27	1	-
850080	DN 80 - PN 16	13–27	1	-
850100	DN 100 - PN 16	15–27	1	-

GAS SOLENOID VALVES

Solenoid valves for gas with manual reset - NC



852

Gas pressure closing regulator, double diaphragm. Threaded connections.
Regulation and closing at null flow according to UNI EN 88.
Compliance with directive ATEX (II 2G - II 2D).

Medium temperature range: -15–60 °C
Maximum upstream pressure: 500 mbar

Code	Connection	Adjustment pressure range (mbar)		
852004	Rp 1/2″F	18–40	1	-
852005	Rp 3/4″F	18–40	1	-
852006	Rp 1″F	18–40	1	-
852007	Rp 1 1/4″F	13–23	1	-
852008	Rp 1 1/2″F	13–23	1	-
852009	Rp 2″F	13–23	1	-



852

Gas pressure closing regulator, double diaphragm. Flanged connections.
To be coupled with flat counterflanges EN 1092-1.
Compliance with directive ATEX (II 2G - II 2D).
Regulation and closing at null flow according to UNI EN 88.

Medium temperature range: -15–60 °C
Maximum upstream pressure: 500 mbar

Code	Connection	Adjustment pressure range (mbar)		
852060	DN 65 - PN 16	13–27	1	-
852080	DN 80 - PN 16	13–27	1	-
852100	DN 100 - PN 16	15–27	1	-



8541

Solenoid valve for gas, normally closed, with manual reset.
Class A - Group 2.

Maximum working pressure: 500 mbar
Protection class: IP 65

Code	Connection	Electric supply		
854124	Rp 1/2″F	230 V AC	1	20
854125	Rp 3/4″F	230 V AC	1	20
854126	Rp 1″F	230 V AC	1	20
854144	Rp 1/2″F	24 V AC	1	20
854145	Rp 3/4″F	24 V AC	1	20
854146	Rp 1″F	24 V AC	1	20



837

Solenoid valve for gas, normally closed, with manual reset.
Class A - Group 2.

Maximum working pressure: 500 mbar
Protection class: IP 65

Code	Connection	Electric supply		
837005	Rp 3/4″F	230 V AC	1	
837006	Rp 1″F	230 V AC	1	-
837007	Rp 1 1/4″F	230 V AC	1	10
837008	Rp 1 1/2″F	230 V AC	1	10
837009	Rp 2″F	230 V AC	1	-
837105	Rp 3/4″F	24 V AC	1	10
837106	Rp 1″F	24 V AC	1	-
837107	Rp 1 1/4″F	24 V AC	1	-
837108	Rp 1 1/2″F	24 V AC	1	-
837109	Rp 2″F	24 V AC	1	-
837205	Rp 3/4″F	12 V DC	1	10
837206	Rp 1″F	12 V DC	1	10
837207	Rp 1 1/4″F	12 V DC	1	10
837208	Rp 1 1/2″F	12 V DC	1	10
837209	Rp 2″F	12 V DC	1	-



837

Solenoid valve for gas, normally closed, with manual reset. Flanged connections.
To be coupled with flat counterflanges EN 1092-1.
Class A - Group 2.

Maximum working pressure: 500 mbar
Protection class: IP 65

CE

Code	Connection	Electric supply		
837060	DN 65 - PN 16	230 V AC	1	-
837080	DN 80 - PN 16	230 V AC	1	-
837100	DN 100 - PN 16	230 V AC	1	-
837120	DN 125 - PN 16	230 V AC	1	-
837150	DN 150 - PN 16	230 V AC	1	-
837160	DN 65 - PN 16	24 V AC	1	-
837180	DN 80 - PN 16	24 V AC	1	-
837190	DN 100 - PN 16	24 V AC	1	-
837220	DN 125 - PN 16	24 V AC	1	-
837250	DN 150 - PN 16	24 V AC	1	-

Solenoid valves for gas with automatic reset - NC



838

Solenoid valve for gas, normally closed.
Class A - Group 2.

Maximum working pressure: 360 mbar
Protection class: IP 65

CE

Code	Connection	Notes	Electric supply		
838004	Rp 1/2″F	-	230 V AC	1	20
838005	Rp 3/4″F	-	230 V AC	1	-
838006	Rp 1″F	-	230 V AC	1	10
838007	Rp 1 1/4″F	with upper hexagonal fixing nut	230 V AC	1	5
838008	Rp 1 1/2″F	with upper hexagonal fixing nut	230 V AC	1	5
838009	Rp 2″F	with upper hexagonal fixing nut	230 V AC	1	5
838104	Rp 1/2″F	-	24 V AC	1	-
838105	Rp 3/4″F	-	24 V AC	1	20
838106	Rp 1″F	-	24 V AC	1	10
838107	Rp 1 1/4″F	with upper hexagonal fixing nut	24 V AC	1	-
838108	Rp 1 1/2″F	with upper hexagonal fixing nut	24 V AC	1	-
838109	Rp 2″F	with upper hexagonal fixing nut	24 V AC	1	-



838

Solenoid valve for gas, normally closed.
Flanged connections.
To be coupled with flat counterflanges EN 1092-1.
Class A - Group 2.

Maximum working pressure: 200 mbar
Protection class: IP 65

CE

Code	Connection	Electric supply		
838060	DN 65 - PN 16	230 V AC	1	-
838080	DN 80 - PN 16	230 V AC	1	-
838100	DN 100 - PN 16	230 V AC	1	-
838120	DN 125 - PN 16	230 V AC	1	-
838150	DN 150 - PN 16	230 V AC	1	-
838160	DN 65 - PN 16	24 V AC	1	-
838180	DN 80 - PN 16	24 V AC	1	-
838190	DN 100 - PN 16	24 V AC	1	-
838220	DN 125 - PN 16	24 V AC	1	-
838250	DN 150 - PN 16	24 V AC	1	-

Spare parts for gas solenoid valves



837

Spare coil, complete with connector.

CE

Code	Article use	Electric supply		
837A05	837005, 837006, 837007, 837008, 837009	230 V AC	1	-
837B05	837105, 837106, 837107, 837108, 837109	24 V AC	1	-
837C05	837205, 837206, 837207, 837208, 837209	12 V DC	1	-
837A60	837060, 837080, 837100, 837120, 837150	230 V AC	1	-
837B60	837160, 837180, 837190, 837220, 837250	24 V AC	1	-



838

Spare coil, complete with connector.

CE

Code	Article use	Electric supply		
838A04	838004, 838005	230 V AC	1	-
838A06	838006	230 V AC	1	-
838A07	838007, 838008, 838009	230 V AC	1	-
838A17	838007, 838008, 838009	230 V AC	1	-
838B04	838104, 838105	24 V AC	1	-
838B06	838106	24 V AC	1	-
838B07	838107, 838108, 838109	24 V AC	1	-
838B17	838107, 838108, 838109	24 V AC	1	-
838A60	838060, 838080	230 V AC	1	-
838A00	838100	230 V AC	1	-
838A20	838120, 838150	230 V AC	1	-
838B60	838160, 838180	24 V AC	1	-
838B00	838190	24 V AC	1	-
838B20	838220, 838250	24 V AC	1	-



839

Spare coil for normally open solenoid valve, complete with connector. **For 839 series.**

CE

Code	Article use	Electric supply		
839A05	839005, 839006, 839007, 839008, 839009, 839060, 839080, 839100, 839120, 839150	230 V AC	1	-
839B05	839105, 839106, 839107, 839108, 839109, 839160, 839180, 839190, 839220, 839250	24 V AC	1	-
839C05	839205, 839206, 839207, 839208, 839209	12 V DC	1	-



8540

Spare coil for normally open gas solenoid valve, with connector. **For 8540 series**.

CE

Code	Article use		
854012	854024, 854025	1	-
854014	854044, 854045	1	-
854002	854026	1	-
854004	854046	1	-



8541

Spare coil for normally closed gas solenoid valve, with connector. **For 8541 series**.

CE

Code	Article use		
854102	854124, 854125, 854126	1	-
854104	854144, 854145, 854146	1	-

Solenoid valves for gas with manual reset - NO



8540

Solenoid valve for gas, normally open, with manual reset.

Maximum working pressure: 500 mbar
Protection class: IP 65

CE

Code	Connection	Electric supply		
854024	Rp 1/2″ F	230 V AC	1	20
854025	Rp 3/4″ F	230 V AC	1	20
854044	Rp 1/2″ F	24 V AC	1	20
854045	Rp 3/4″ F	24 V AC	1	20



839

Solenoid valve for gas, normally open with manual reset.

Maximum working pressure: 500 mbar
Protection class: IP 65

CE

Code	Connection	Electric supply		
839005	Rp 3/4″ F	230 V AC	1	10
839006	Rp 1″ F	230 V AC	1	
839007	Rp 1 1/4″ F	230 V AC	1	
839008	Rp 1 1/2″ F	230 V AC	1	10
839009	Rp 2″ F	230 V AC	1	-
839105	Rp 3/4″ F	24 V AC	1	10
839106	Rp 1″ F	24 V AC	1	10
839107	Rp 1 1/4″ F	24 V AC	1	-
839108	Rp 1 1/2″ F	24 V AC	1	-
839109	Rp 2″ F	24 V AC	1	-
839205	Rp 3/4″ F	12 V DC	1	-
839206	Rp 1″ F	12 V DC	1	-
839207	Rp 1 1/4″ F	12 V DC	1	10
839208	Rp 1 1/2″ F	12 V DC	1	10
839209	Rp 2″ F	12 V DC	1	10

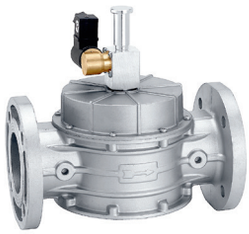

839

Solenoid valve for gas, normally open, with manual reset. Flanged connections.
To be coupled with flat counterflanges EN 1092-1.

Maximum working pressure: 500 mbar
Protection class: IP 65

CE

Code	Connection	Electric supply		
839060	DN 65 - PN 16	230 V AC	1	-
839080	DN 80 - PN 16	230 V AC	1	-
839100	DN 100 - PN 16	230 V AC	1	-
839120	DN 125 - PN 16	230 V AC	1	-
839150	DN 150 - PN 16	230 V AC	1	-
839160	DN 65 - PN 16	24 V AC	1	-
839180	DN 80 - PN 16	24 V AC	1	-
839190	DN 100 - PN 16	24 V AC	1	-
839220	DN 125 - PN 16	24 V AC	1	-
839250	DN 150 - PN 16	24 V AC	1	-

GAS CONTROL DEVICES AND ACCESSORIES

Gas accessories



841

Extendible stainless steel joint according to UNI 11353, for gas systems in domestic applications (max. 35 kW).
Fixed male connection: AISI 303.
Flexible: AISI 316L.
Captive female connection: AISI 303.

Maximum working pressure: 0,5 bar
Material: stainless steel

Code	Connection 1	Connection 2	Length (mm)		
841414	1/2″ M	1/2″ F	90–130	1	-
841514	3/4″ M	3/4″ F	90–130	1	-
841614	1″ M	1″ F	90–130	1	-
841420	1/2″ M	1/2″ F	120–210	1	-
841520	3/4″ M	3/4″ F	120–210	1	-
841620	1″ M	1″ F	120–210	1	-
841440	1/2″ M	1/2″ F	240–410	1	-
841540	3/4″ M	3/4″ F	240–410	1	-
841640	1″ M	1″ F	240–410	1	-



842

Antivibration joint for gas systems.
Conforms to standards UNI EN 676.
Threaded version: body AISI 316L, fixed male connection: FE 37.
Flanged version: body AISI 321, free flanged connections: ASTM A 105 - PN 10.
To be coupled with flat counterflanges EN 1092-1.

Maximum working pressure: 0,5 bar
Material: stainless steel

Code	Connection	Length (mm)		
842004	1/2″ M	145	1	-
842005	3/4″ M	150	1	-
842006	1″ M	165	1	-
842007	1 1/4″ M	180	1	-
842008	1 1/2″ M	210	1	-
842009	2″ M	230	1	-
842060	DN 65 - PN 10	175	1	-
842080	DN 80 - PN 10	175	1	-
842100	DN 100 - PN 10	195	1	-



8460

Tap for gas pressure gauge, with opening button.

Code	Connection	
846002	1/4″ F	1
846003	3/8″ F	1



8461

Pressure gauge for gas.
Sensitive element of diaphragm precision.
Radial connection.

Accuracy class: Pressure gauge UNI 1,6

Code	Connection	Pressure gauge scale (mbar)		
846101	1/4″ M radial connection	0–60	1	50
846102	1/4″ M radial connection	0–100	1	50
846103	3/8″ M radial connection	0–60	1	50
846104	3/8″ M radial connection	0–100	1	50

Gas detector

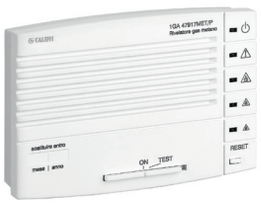

8563

Gas detector, with built-in sensor and relay outlet.
For solenoid valves 8540, 8541, 837, 838 and 839 series.
With BUS connection, for auxiliary remote sensor.
Outlet contact: 8 (2) A.
Domestic use.

Electric supply: 230 V AC
Protection class: IP 42

CE

Code	Notes		
856300	for methane gas	1	8
856302	for LPG	1	-



8563

Auxiliary remote sensor.
For gas detector 8563 series.
Domestic use.

Electric supply: 230 V AC
Protection class: IP 42

CE

Code	Notes		
856310	for methane gas	1	-
856312	for LPG	1	8

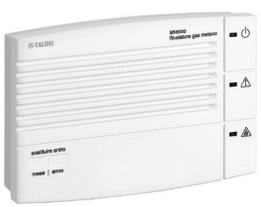

8565

Gas detector, with built-in sensor and relay outlet.
Without BUS connection.
Outlet contact: 8 (2) A.
For domestic use.

Electric supply: 230 V AC
Protection class: IP 42

CE

Code	Notes		
856500	for methane gas	1	8
856502	for LPG	1	8



855

Gas detector, with built-in sensor and relay outlet.
Without BUS connection.
With solenoid valve normally open.

Electric supply: 230 V AC
Protection class: IP 42

CE

Code	Connection	Notes		
855400	Rp 1/2" F	for methane gas	1	10
855500	Rp 3/4" F	for methane gas	1	4
855410	Rp 1/2" F	for LPG	1	4
855510	Rp 3/4" F	for LPG	1	8

Signal and alarm accessories



8561

Rotating siren.
112 dB/1m.

Electric supply: 230 V AC
Protection class: IP 14

CE

Code		
856102	1	-



8562

Electronic intermittence blinker.
Lamp power 40 W.

Electric supply: 230 V AC
Protection class: IP 65

CE

Code		
856202	1	-

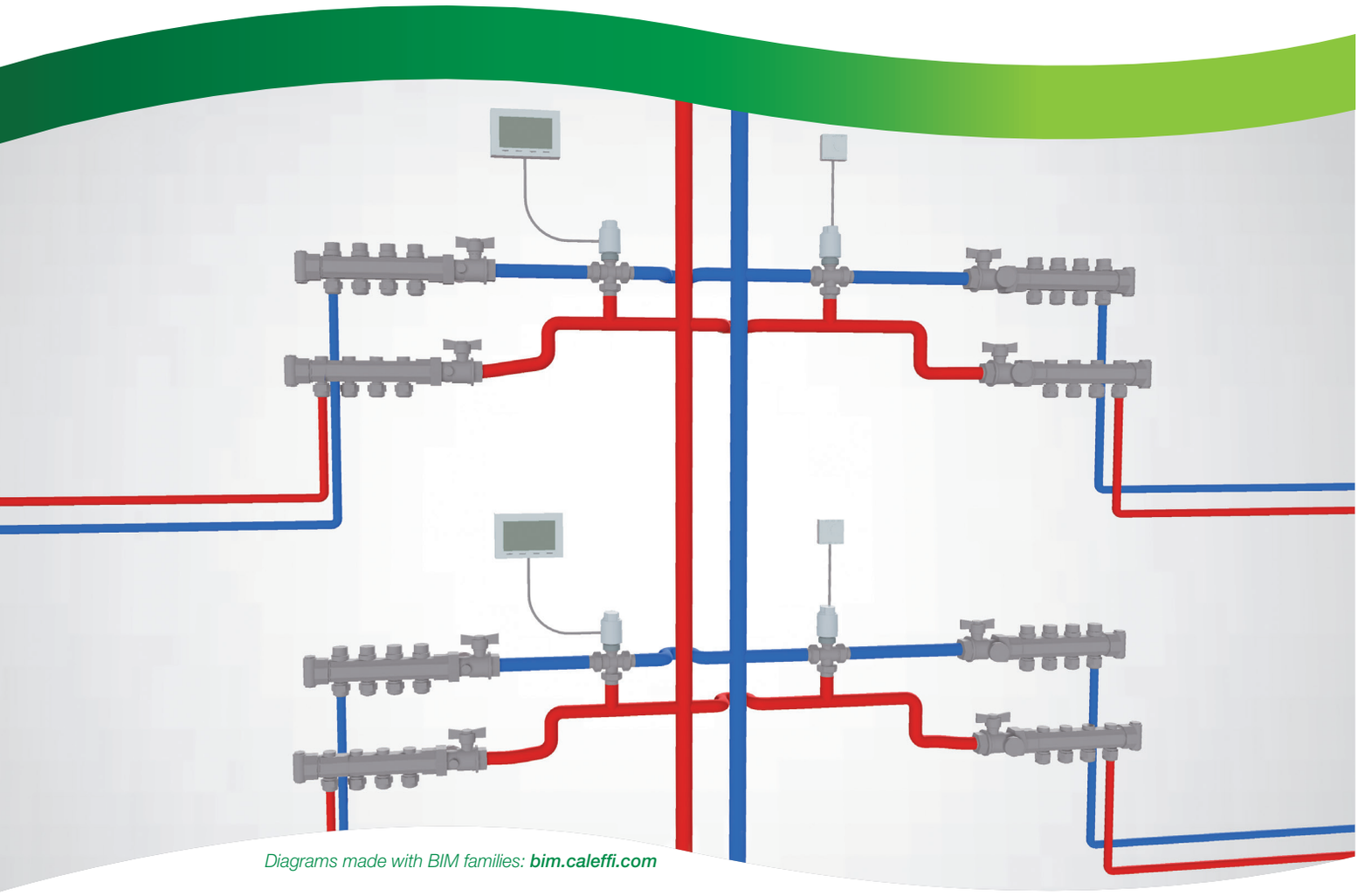

Diagrams made with BIM families: ***bim.caleffi.com***

Expansion vessels
Control devices for autoclaves
Temperature regulators, thermostats and chrono-thermostats

EXPANSION VESSELS

Expansion vessels for heating systems



556

Welded expansion vessel, for heating systems, EC certification.
Diaphragm membrane.
Conformity to EN 13831 standard.

Maximum working pressure: 6 bar
System working temperature range: -10–120 °C
Diaphragm temperature range: -10–70 °C
Maximum percentage of glycol: 50 %
Medium: water, glycol solutions
Pre-charge: 1,5 bar

CE 0045

Code	Connection	Volume (l)	
556008	3/4" M	8	1
556012	3/4" M	12	1
556018	3/4" M	18	1
556025	3/4" M	25	1



556

Welded expansion vessel, for heating systems, EC certification.
Diaphragm membrane.
Conformity to EN 13831 standard.

Maximum working pressure: 6 bar
System working temperature range: -10–120 °C
Diaphragm temperature range: -10–70 °C
Maximum percentage of glycol: 50 %
Medium: water, glycol solutions
Pre-charge: 1,5 bar

CE 0045

Code	Connection	Volume (l)	
556035	3/4" M	35	1
556050	3/4" M	50	1
556080	1" M	80	1
556100	1" M	100	1
556140	1" M	140	1
556200	1" M	200	1
556250	1" M	250	1



556

Welded expansion vessel, for heating systems, EC certification.
Diaphragm membrane.
Conformity to EN 13831 standard.

Maximum working pressure: 6 bar
System working temperature range: -10–120 °C
Diaphragm temperature range: -10–70 °C
Maximum percentage of glycol: 50 %
Medium: water, glycol solutions
Pre-charge: 1,5 bar

CE 0045

Code	Connection	Volume (l)	
556300	1" M	300	1
556400	1" M	400	1
556500	1" M	500	1
556600	1" M	600	1

Expansion vessels for domestic water systems



5557

Welded expansion vessel, for hot water systems, EC certification.
Bladder diaphragm.
Conforms to EN 13831 standard.

Maximum working pressure: 10 bar
System working temperature range: -10–100 °C
Diaphragm temperature range: -10–100 °C

CE 1370

Code	Connection	Volume (l)		
555702	1/2″ M	2	4	-
555705	3/4″ M	5	1	-
555708	3/4″ M	8	1	-



568

Welded expansion vessel, for domestic water systems, EC certification.
Bladder diaphragm.
Conformity to EN 13831 standard.

Maximum working pressure: 10 bar
System working temperature range: -10–70 °C
Diaphragm temperature range: -10–70 °C
Pre-charge: 2,5 bar

CE 0045

Code	Connection	Notes	Volume (l)		
568008	3/4″ M	-	8	1	
568012	3/4″ M	-	12	1	
568018	3/4″ M	-	18	1	
568025	3/4″ M	-	25	1	
568033	3/4″ M	complete with wall mounting brackets	33	1	



568

Welded expansion vessel, for hot water systems, EC certification.
Bladder diaphragm (replaceable for volumes from 60 to 500 l).
Conformity to EN 13831 standard.

Maximum working pressure: 10 bar
System working temperature range: -10–70 °C
Diaphragm temperature range: -10–70 °C
Pre-charge: 2,5 bar

CE 0045

Code	Connection	Volume (l)		
568050	1″ M	50	1	
568060	1″ M	60	1	
568080	1″ M	80	1	
568100	1″ M	100	1	
568200	1 1/4″ M	200	1	
568300	1 1/4″ M	300	1	
568400	1 1/4″ M	400	1	-
568500	1 1/4″ M	500	1	-

Accessories for expansion vessels



5580

Ball shut-off valve, for expansion vessels, with drain cock. **For domestic water system.**

Maximum working pressure: 6 bar
Medium temperature range: 5–85 °C

Code	Connection		
558050	3/4″ F	1	20
558060	1″ F	1	20
558070	1 1/4″ F	1	20



558

Automatic shut-off cock, for expansion vessels. **For domestic water circuit.**

Maximum working pressure: 10 bar
Medium temperature range: 5–110 °C

Code	Inlet connection	Outlet connection		
558500	3/4″ F	3/4″ M	1	50



558

Automatic shut-off cock, for expansion vessel, with drain cock. **For domestic water circuit.**

Maximum working pressure: 6 bar
Medium temperature range: 5–85 °C

Code	Inlet connection	Outlet connection		
558510	3/4″ F	3/4″ M	1	50

CONTROL DEVICES FOR AUTOCLAVES

Pressure switch and float switch



625

Pressure switch for boosting sets and domestic water applications.

Medium temperature range: 0–55 °C
Ambient temperature range: 0–55 °C
Protection class: IP 44
Contact rating (up to 500V tripolar): 16 (10) A

CE

Code	Connection	Maximum working pressure (bar)	Adjustment pressure range (bar)		
625005	1/4" F	5	1–5	1	10
625010	1/4" F	12	3–12	1	10



613

Float switch, 250 V 10 A.
Approved for heavy commissioning.

03

Code	Probe/cable length (m)		
613030	3	1	5
613050	5	1	5

TEMPERATURE REGULATORS, THERMOSTATS AND CHRONO-THERMOSTATS

Temperature regulators



161

Digital regulator with synoptic diagram **for heating and cooling**.
Complete with immersion flow probes with pocket and Pt1000 Ø 6 mm return probe (pocket to be chosen according to the pipe, see accessories).
Optional climatic probe.

Adjustment temperature range: 5–95 °C
Electric supply: 230 V AC
Protection class: IP 20
Probe/cable length: 1,5 m
Control signal: 3 point, 0–10 V

CE

Code		
161010	1	-



1520

Digital temperature controller for **heating and cooling**.
Complete with flow probe, outside probe and max. relative humidity probe.

Electric supply: 230 V AC
Running power consumption: 5,5 VA
Protection class: IP 40
Control signal: 3 point

CE

Code	Notes		
152021	1 channel	1	-



1520

Outside compensated digital temperature regulator, **only for heating**.
Complete with contact flow probe and outside probe.

Adjustment temperature range: 20–90 °C
Electric supply: 230 V AC
Protection class: IP 40
Control signal: 3 point

CE

Code	Notes		
152001	1 channel	1	-
152002	2 channels	1	-
152003	3 channels	1	-

Accessories for regulator 161010



161
Outside temperature probe.

Code			
161002		1	-



161
Pressure safety switch.
Complete with cable for wiring.

Medium temperature range: 5–100 °C
Supply cable length: 1 m
Adjustment pressure range: 0,5–10 bar

Code			
161003		1	-



161
Dew point detector.

Working range (humidity) UR: 30–100 %

Code			
161004		1	-



161
Remote regulator.
Functions:
- translation of the setting curves, from +15 K to -15 K;
- maximum temperature;
- position OFF.

Code			
161005		1	-



161
Pt1000 contact probe for pipes, Ø 6 mm.

Code	Notes	Article use		
161012	L cable 2,5 m	161010	1	-



161
Pt1000 probe pocket, size 1/2" M.

Code	Notes	Article use		
161013	L 60 mm	161010	1	-
161014	L 100 mm	161010, 150006, 257006	1	-



161
Pt1000 probe, Ø6 mm.

Code	Notes	Article use		
161015	L 20 mm, L cable 1,5 m	161010	1	-
161006	L 45 mm, L cable 2,5 m	161010	1	-

Thermostats



620
Room thermostat with changeover switch
16 (2,5) A - 250 V.
Ecodesign Directive Class: I.

Protection class: IP 30

CE

Code	Notes		
620000	without warning lamp	1	20
620100	with warning lamp	1	20
620110	with warning lamp ON/OFF switch	1	20
620120	with warning lamp and SUMMER - WINTER switch	1	20



620
Digital room thermostat with display.
With 5 (3) A switched contact.
ON/OFF function with adjustable differential from 0,2 to 2 °C or proportional.
Two temperature levels + antifreeze.
SUMMER - WINTER control.
Adjustable temperature with 0,1 °C steps.
Ecodesign Directive Class: I

Protection class: IP 30

CE

Code	Electric supply		
620300	with battery	1	10
620302	230 V AC	1	10



6205

Control bar.
Timer switch input.
Pump outlet control.
SUMMER - WINTER switch input.

Electric supply: 230 V AC
Running power consumption: 5,5 VA
Protection class: IP 30 (with rubber cable gland)
Contact rating on switch-over: 10 A

CE

Code	Notes		
620542	4 channels	1	8
620582	8 channels	1	8

Chrono-thermostats



618

Digital chrono-thermostat, with battery supply.
Daily and weekly programming.
Two temperature levels + antifreeze.
Fitted for phone programmer.
30-minute minimum programme.
Output contact: 8 (2) A.
Ecodesign Directive Class: I-IV.

Electric supply: with battery
Protection class: IP 30

CE

Code	Notes		
618101	daily	1	10
618107	weekly	1	10



739

Digital chrono-thermostat, with battery supply.
Weekly programming. Quickly programming.
SUMMER - WINTER switch.
Output contact 5 (2) A.
Ecodesign Directive Class: I-IV

Electric supply: with battery
Protection class: IP 30
Length: 135 mm
Depth: 28 mm
Height: 90 mm

CE

Code		
739107	1	10



738

Digital room chrono-thermostat with battery electric supply.
Backlit display and navigation via menu.
Weekly programmable clock. Fitted for phone programmer.
3 temperature levels + antifreeze.
30-minute minimum programme.
ON/OFF function with adjustable differential from 0,2 to 2 °C or proportional.
SUMMER - WINTER switch.
Adjustable temperature with 0,1°C steps.
Relais output with changeover switch contact: 5 (3) A / 250 V.
Ecodesign Directive Class: I-IV.

Electric supply: with battery
Protection class: IP 30

CE

Code		
738407	1	10



738

Digital room chrono-thermostat.
Backlit display and navigation via menu.
Weekly programmable clock.
Fitted for phone programmer.
3 temperature levels + antifreeze.
30-minute minimum programme.
ON/OFF function with adjustable differential from 0,2 to 2 °C or proportional.
SUMMER - WINTER switch.
Adjustable temperature with 0,1°C steps.
Relais output with changeover switch contact: 5 (3) A / 250 V.
Ecodesign Directive Class: I-IV.

Electric supply: 230 V AC
Protection class: IP 30

CE

Code		
738427	1	-

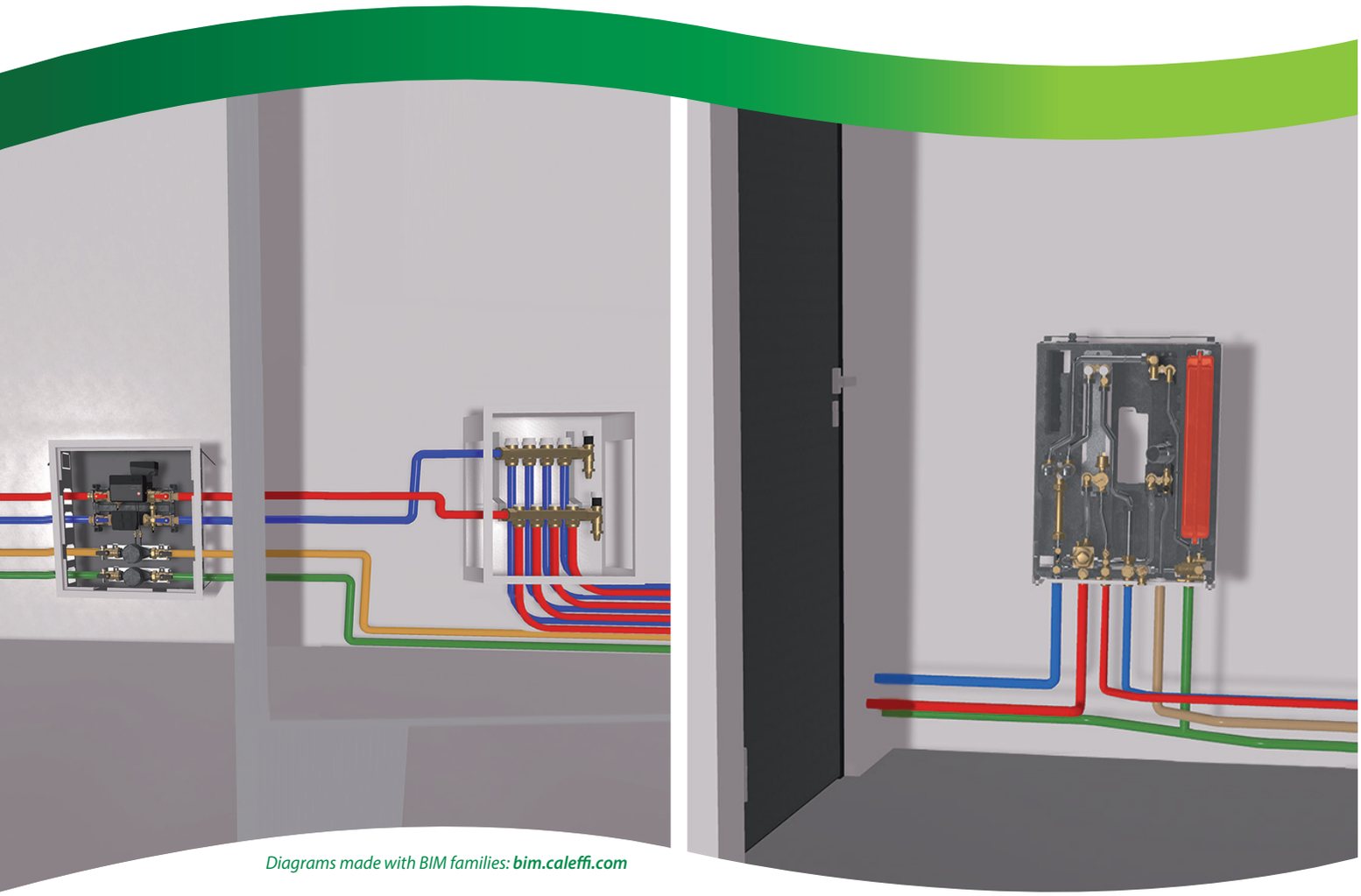

Diagrams made with BIM families: ***bim.caleffi.com***

Heat meters
Water meters
Compact user modules
Compact user modules with dynamic balancing
Cooling interface unit
Supply units suitable for heat metering
Wall mounted heat interface units with electronic regulation
Mechanical wall mounted heat interface unit
Recess mounted heat interface unit with electronic regulation
Complementary heat meters
Communication protocol converters

HEAT METERS

Turbine heat meters

7504
CONTECA® EASY

Direct heat meter for heating and cooling systems (*).
Complete with:
- electronic integrator with LCD display;
- pair of temperature probes ;
- pair of Y fitting probe pockets;
- turbine volume meter with pulse output;
- 2 pulse inlets for DCW and DHW reading.

Can be integrated with additional configuration options, to be ordered concurrently (*).

Medium temperature range: 2–90 °C
Nominal pressure: PN 16
Accuracy class: 3
Probe/cable length: 1,9 m
Electric supply: 24 V AC
Running power consumption: 1 W
Protection class: IP 54
Communication protocol: M-Bus on RS485



CE 2014/32/UE (MI004)

Code	Connection	Permanent flow rate (Qp) (m^3/h)	Minimum flow rate (Qi) (l/h)	Measure type		
750404	1/2" M	1,5	30	single nozzle	1	-
750405	3/4" M	2,5	50	single nozzle	1	-
750406	1" M	3,5	70	multi-nozzle	1	-
750407	1 1/4" M	6	120	multi-nozzle	1	-
750408	1 1/2" M	10	200	multi-nozzle	1	-
750409	2" M	15	300	multi-nozzle	1	-

7504
CONTECA® EASY

Direct heat meter for heating and cooling systems (*).
Complete with:
- electronic integrator with LCD display;
- pair of temperature probes ;
- pair of weld sleeve and probe pockets;
- turbine volume meter with pulse output;
- 2 pulse inlets for DCW and DHW reading.

Can be integrated with additional configuration options, to be ordered concurrently (*).

Medium temperature range: 2–90 °C
Nominal pressure: PN 16
Accuracy class: 3
Probe/cable length: 1,9 m
Electric supply: 24 V AC
Running power consumption: 1 W
Protection class: IP 54
Communication protocol: M-Bus on RS485
Measure type: woltmann



CE 2014/32/UE (MI004)

Code	Connection	Permanent flow rate (Qp) (m^3/h)	Minimum flow rate (Qi) (l/h)		
750410	DN 65 - PN 16	25	2500	1	-
750411	DN 80 - PN 16	32	3200	1	-
750412	DN 100 - PN 16	50	5000	1	-
750413	DN 125 - PN 16	80	8000	1	-
750414	DN 150 - PN 16	150	6000	1	-
750415	DN 200 - PN 16	250	10000	1	-

(*) Available configuration options:
- Cooling metering option (cod. 755810)
- MODBUS-RTU transmission option (cod. 750811)
- Flow rate scanning software option for DHW recirculation (cod. 755826)
- Couple of 8 m temperature probes (cod. 750931)

Ultrasonic heat meters

7507
CONTECA® EASY ULTRA

Direct heat meter for heating and cooling systems (*).
Complete with:
- electronic integrator with LCD display;
- pair of temperature probes ;
- pair of Y fitting probe pockets;
- ultrasonic volume meter with pulse output;
- 2 pulse inlets for DCW and DHW reading.

Can be integrated with additional configuration options, to be ordered concurrently (*).

Medium temperature range: 2–90 °C
Nominal pressure: PN 16
Accuracy class: 2
Probe/cable length: 1,9 m
Electric supply: 24 V AC
Running power consumption: 1 W
Protection class: IP 54
Communication protocol: M-Bus on RS485



CE 2014/32/UE (MI004)

Code	Connection	Minimum flow rate (Qi) (l/h)	Permanent flow rate (Qp) (m^3/h)		
750704	1/2″ M	6	1,5	1	-
750705	3/4″ M	10	2,5	1	-
750706	1″ M	35	3,5	1	-
750707	1 1/4″ M	24	6	1	-
750708	1 1/2″ M	40/100	10	1	-

7507
CONTECA® EASY ULTRA

Direct heat meter for heating and cooling systems (*).
Complete with:
- electronic integrator with LCD display;
- pair of temperature probes ;
- pair of weld sleeve and probe pockets;
- ultrasonic volume meter with pulse output;
- 2 pulse inlets for DCW and DHW reading.

Can be integrated with additional configuration options, to be ordered concurrently (*).

Medium temperature range: 2–90 °C
Accuracy class: 2
Probe/cable length: 1,9 m
Electric supply: 24 V AC
Running power consumption: 1 W
Protection class: IP 54
Communication protocol: M-Bus on RS485



CE 2014/32/UE (MI004)

Code	Connection	Permanent flow rate (Qp) (m^3/h)	Minimum flow rate (Qi) (l/h)		
750709	DN 50 - PN 25	15	60/150	1	-
750710	DN 65 - PN 25	25	250	1	-
750711	DN 80 - PN 25	40	400	1	-
750712	DN 100 - PN 16	60	600	1	-
750713	DN 125 - PN 16	100	1000	1	-
750714	DN 150 - PN 16	150	1500	1	-
750715	DN 200 - PN 16	250	2500	1	-

(*) Available configuration options:
- Cooling metering option (cod. 755810)
- MODBUS-RTU transmission option (cod. 750811)
- Flow rate scanning software option for DHW recirculation (cod. 755826)
- Couple of 8 m temperature probes (cod. 750931)

Configuration options



7558

Cooling metering option.
The configuration option allows the upgrade on CONTECA EASY heat meters.

Code		
755810	1	-



7508

MODBUS-RTU transmission option.
The option allows to add the function to CONTECA EASY heat meter devices.
Max n. devices on Modbus network: 50
Communication parameters: 9600,8,N,1

Code		
750811	1	-



7558

Flow rate scanning software option for DHW recirculation.
The option allows to add the function to CONTECA EASY heat meters.
The option must be ordered in combination with 755826 00. or 755826 105 DHW meter and AUTOFLOW kit.

Code		
755826	1	-



7509

Couple of temperature probes.
For Conteca Easy heat meters.

Probe/cable length: 8 m

Code		
750931	1	-

Compact ultrasonic heat meters



CAL1918 SENSONICAL ULTRA

Compact direct ultrasonic heat meter for heating and cooling systems.
Complete with:
- electronic integrator with LCD display;
- pair of temperature probes;
- ultrasonic volume meter.

Non-replaceable battery (up to 10 years life).

Nominal pressure: PN 16
Permanent flow rate (Qp): 2,5 m^3/h
Minimum flow rate (Qi): 25 l/h
Accuracy class: 2
Probe/cable length: 1,5 m
Electric supply: with battery
Protection class: IP 54

CE 2014/32/UE (MI004)

Code	Connection	Notes	Communication protocol		
CAL19185MI	3/4" M	with 3 pulse inputs	M-Bus	1	10



CAL1918

3/4" F ball shut-off valve with connection for M10x1 probe.

Code	Connection		
CAL19180	3/4" F	1	5



CAL1918

3/4" tee with connection for M10x1 probe.

Code	Connection		
CAL19181	3/4" F	1	5

WATER METERS

Water meters



7942

Water meter **with pulse output**.
Complete with fittings.

Medium: domestic water
Pulse weight: 10 l/pulse
Nominal pressure: PN 16
Probe/cable length: 1 m

ATTESTATION DE CONFORMITÉ SANITAIRE ACS

2014/32/UE (MI001)

Code	Connection	Notes	Medium temperature range (°C)	Permanent flow rate (DW) (Q3) (m^3/h)		
794204	1/2" M	DCW*	0–50	2,5	1	5
794205	3/4" M	DCW*	0–50	4,0	1	5
794206	1" M	DCW**	0–50	6,3	1	-
794207	1 1/4" M	DCW**	0–50	10	1	-
794208	1 1/2" M	DCW**	0–50	16	1	-
794209	2" M	DCW**	0–50	25	1	-
794204/C	1/2" M	DHW*	30–90	2,5	1	5
794205/C	3/4" M	DHW*	30–90	4,0	1	5
794206/C	1" M	DHW**	30–90	6,3	1	-
794207/C	1 1/4" M	DHW**	30–90	10	1	-
794208/C	1 1/2" M	DHW**	30–90	16	1	-
794209/C	2" M	DHW**	30–90	25	1	-



7942

Water meter **with pulse output**.

Medium: domestic water
Pulse weight: 100 l/pulse
Nominal pressure: PN 16
Medium temperature range: 0–50 °C
Probe/cable length: 1.5 m

2014/32/UE (MI001)

Code	Connection	Notes	Permanent flow rate (DW) (Q3) (m^3/h)		
794210	DN 65 - PN 16	**	63	1	-
794211	DN 80 - PN 16	**	100	1	-
794212	DN 100 - PN 16	**	160	1	-

* for installation with horizontal dial facing upwards or in vertical position

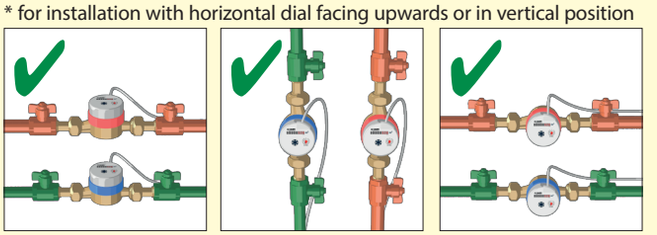

** for installation with dial horizontal facing upwards

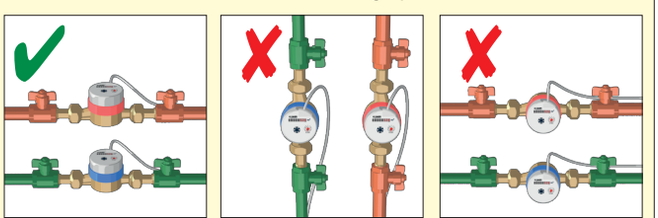

Maximum extension of the volume meter/logger connection cable: 50 m. For use with a shielded cable with the same cross-section and routed in a dedicated raceway.

Water metering for domestic hot water recirculation systems



750 NEW
AQUAPRO EASY

Multiple data acquisition device for domestic hot and cold water consumption.
Complete with:
- electronic integrator with LCD display;
- 4 pulse inputs;

Supports DHW recircuation loops for up to two units.

Electric supply: 24 V AC
Running power consumption: 1 W
Protection class: IP 54
Communication protocol: ModBus

CE

Code		
750947 601	1	-



7558

Hydraulic kit for water metering with DHW recirculation.
For standalone installation.
Complete with:
- water meter with pulse output;
- AUTOFLOW 127 series.

Pulse weight: 1 l/pulse

ATTESTATION DE CONFORMITE SANITAIRE ACS 2014/32/UE (MI001)

Code	attacco contatore volumetrico	attacco AUTOFLOW	Nominal flow rate (l/h)	Permanent flow rate (DW) (Q3) (m^3/h)		
755826 004	1/2″ M	1/2″	40	2,5	1	5
755826 005	3/4″ M	1/2″	40	4,0	1	5
755826 006	1″ M	3/4″ F	60	6,3	1	-



7558

Hydraulic kit for water metering with DHW recirculation.
For installation on templates code 700009.
Complete with:
- water meter with pulse output;
- 128 series AUTOFLOW® flow rate regulator.

Pulse weight: 1 l/pulse

ATTESTATION DE CONFORMITE SANITAIRE ACS 2014/32/UE (MI001)

Code	attacco contatore volumetrico	attacco AUTOFLOW	Nominal flow rate (l/h)	Permanent flow rate (DW) (Q3) (m^3/h)		
755826 105	3/4″ M	3/4″ M	40	4,0	1	5

Application diagram: 755826 00. kit for double DHW recirculation scan system

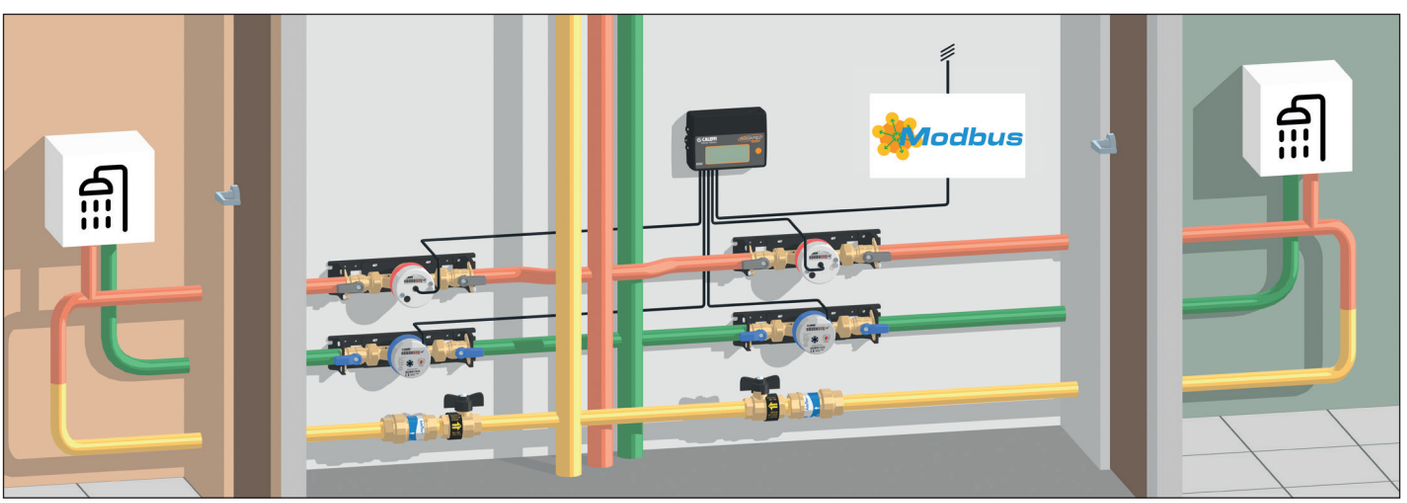

COMPACT USER MODULES

PLURIMOD user modules



7008 PLURIMOD®

Compact pre-assembled user module for heating and cooling systems (*).
Complete with:
- strainer cartrdige with stainless steel mesh;
- suitable for AUTOFLOW cartridge or static balancing headwork;
- 2 way ball zone valve;
- actuator with auxiliary microswitch;
- **CONTECA® EASY** (24 V AC) heat meter with turbine flow meter.

Reversible installation for primary side on left-hand (factory setting) or right-hand side.
Can be integrated with additional configuration options, to be ordered concurrently (*).

Nominal pressure: PN 10
Maximum recommended flow rate: 1600 l/h
Medium temperature range: 3–90 °C

CE 2014/32/UE (MI001)

Code	Electric supply		
700815	230 V AC	1	2
700816	24 V AC	1	2



7008 PLURIMOD® ULTRA

Compact pre-assembled user module for heating and cooling systems (*).
Complete with:
- strainer cartrdige with stainless steel mesh;
- suitable for AUTOFLOW cartridge or static balancing headwork;
- 2 way ball zone valve;
- actuator with auxiliary microswitch;
- **CONTECA® EASY ULTRA** (24 V AC) heat meter with ultrasonic flow meter.

Reversible installation for primary side on left-hand (factory setting) or right-hand side.
Can be integrated with additional configuration options, to be ordered concurrently (*).

Nominal pressure: PN 10
Maximum recommended flow rate: 1800 l/h
Medium temperature range: 3–90 °C

CE 2014/32/UE (MI001)

Code	Electric supply		
700815 007	230 V AC	1	2
700816 007	24 V AC	1	2



7008 PLURIMOD®

Compact user module with heat meter template for heating and cooling systems (*).
Complete with:
- strainer cartrdige with stainless steel mesh;
- suitable for AUTOFLOW cartridge or static balancing headwork;
- 2 way ball zone valve;
- actuator with auxiliary microswitch;
- copper template for heat meter.

Nominal pressure: PN 10
Medium temperature range: 3–90 °C

Code	Electric supply		
700815 001	230 V AC	1	2
700816 001	24 V AC	1	2



7008

Spare technopolymer AUTOFLOW cartridge.
Suitable for PLUIRIMOD user modules.

Code	Notes		
700875 1M0	1,00	1	-
700875 1M2	1,20	1	-
700875 1M4	1,40	1	-
700875 1M6	1,60	1	-
700875 M12	0,12	1	-
700875 M15	0,15	1	-
700875 M20	0,20	1	-
700875 M25	0,25	1	-
700875 M30	0,30	1	-
700875 M35	0,35	1	-
700875 M40	0,40	1	-
700875 M50	0,50	1	-
700875 M60	0,60	1	-
700875 M70	0,70	1	-
700875 M80	0,80	1	-
700875 M90	0,90	1	-



7008

Headwork for static balancing.
Suitable for PLURIMOD user modules.

Code		
700801	1	-

(*) Available configuration options:
- Cooling metering option (cod. 755810);
- MODBUS-RTU transmission option (cod. 750811);
- Flow rate scanning software option for DHW recirculation (cod. 755826);
- Couple of 8 m temperature probes (cod. 750931).

PLURIMOD EASY self-balanced user modules



7002 PLURIMOD® EASY

Compact pre-assembled user module for heating and cooling systems (*).
Complete with:
- strainer cartrdige with stainless steel mesh;
- fixed setting pressure differential control valve;
- 2 way zone valve with presetting;
- thermoelectric actuator with auxiliary microswitch;
- **CONTECA® EASY** (24 V AC) heat meter with turbine flow meter.

Reversible installation for primary side on left-hand (factory setting) or right-hand side.
Can be integrated with additional configuration options, to be ordered concurrently (*).

Nominal pressure: PN 10
Medium temperature range: 3–90 °C

CE 2014/32/UE (MI004)

Code	Electric supply	Max. recommended flow rate (l/h)	Differential pressure fixed setting (kPa)		
700213	230 V AC	900	20	1	2
700214	24 V AC	900	20	1	2
700215	230 V AC	1400	30	1	2
700216	24 V AC	1400	30	1	2



7002 PLURIMOD® EASY ULTRA

Compact pre-assembled user module for heating and cooling systems (*).
Complete with:
- strainer cartrdige with stainless steel mesh;
- fixed setting pressure differential control valve;
- 2 way zone valve with presetting;
- thermoelectric actuator with auxiliary microswitch;
- **CONTECA® EASY ULTRA** (24 V AC) heat meter with ultrasonic flow meter.

Reversible installation for primary side on left-hand (factory setting) or right-hand side.
Can be integrated with additional configuration options, to be ordered concurrently (*).

Nominal pressure: PN 10
Medium temperature range: 3–90 °C

CE 2014/32/UE (MI004)

Code	Electric supply	Max. recommended flow rate (l/h)	Differential pressure fixed setting (kPa)	x		
700213 007	230 V AC	900	20		1	2
700214 007	24 V AC	900	20		1	2
700215 007	230 V AC	1400	30		1	2
700216 007	24 V AC	1400	30		1	2

(*) Available configuration options:
- Cooling metering option (cod. 755810);
- MODBUS-RTU transmission option (cod. 750811);
- Flow rate scanning software option for DHW recirculation (cod. 755826);
- Couple of 8 m temperature probes (cod. 750931).



7002 PLURIMOD® EASY

Compact user module with heat meter template for heating and cooling systems (*).
Complete with:
- strainer cartrdige with stainless steel mesh;
- fixed setting pressure differential control valve;
- 2 way zone valve with presetting;
- thermoelectric actuator with auxiliary microswitch;
- copper template for heat meter.

Code	Electric supply	Max. recommended flow rate (l/h)	Differential pressure fixed setting (kPa)		
700215 001	230 V AC	600	15	1	2
700216 001	24 V AC	600	15	1	2
700217 001	230 V AC	900	20	1	2
700218 001	24 V AC	900	20	1	2
700219 001	230 V AC	1400	30	1	2
700220 001	24 V AC	1400	30	1	2

Configuration options



7558

Cooling metering option.
The configuration option allows the upgrade on CONTECA EASY heat meters.

Code		
755810	1	-



7508

MODBUS-RTU transmission option.
The option allows to add the function to CONTECA EASY heat meter devices.
Max n. devices on Modbus network: 50
Communication parameters: 9600,8,N,1

Code		
750811	1	-



7558

Flow rate scanning software option for DHW recirculation.
The option allows to add the function to CONTECA EASY heat meters.
The option must be ordered in combination with 755826 00. or 755826 105 DHW meter and AUTOFLOW kit.

Code		
755826	1	-

(*) Configuration options needs to be chosen when placing the order on heat meter in which they have to be enabled.

Installation templates



7000

Recessed box for PLURIMOD® and PLURIMOD EASY® user modules.
Complete with:
- painted door for interior installation;
- technopolymer mounting bracket with thermal break;
- full EPP insulation;
- 2 pairs of ball shut-off valves;
- 2 technopolymer flushing pipes (T max. 55 °C);
- 2 positioning hooks for 7000 series domestic water outlets.

Height: 480 mm
Width: 480 mm
Depth: 130–160 mm

Code	Connection		
700000	3/4" M	1	-



7000

Recessed box with painted door for interior installation.
5 positioning hooks.

Height: 550 mm
Width: 550 mm
Depth: 120–150 mm

Code		
700024	1	-



7000

Recessed box with painted door for interior installation.
12 positioning hooks.

Height: 1175 mm
Width: 550 mm
Depth: 140–180 mm

Code	Notes		
700025		1	-



7000

Wall hanging steel plate for PLURIMOD® and PLURIMOD® EASY user modules.
Complete with:
- painted door for interior installation;
- technopolymer mounting bracket with thermal break;
- full EPP insulation;
- 2 pairs of ball shut-off valves;
- 2 technopolymer flushing pipes (T max. 55 °C);
- 3 positioning hooks for 7000 series domestic water outlets.

Height: 610 mm
Width: 480 mm

Code	Connection		
700000 003	3/4" M	1	-

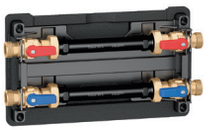

7000

Template for PLURIMOD® and PLURIMOD EASY® user modules.
Complete with:
- painted door for interior installation;
- technopolymer mounting bracket with thermal break;
- full EPP insulation;
- 2 pairs of ball shut-off valves;
- 2 technopolymer flushing pipes (T max. 55 °C).

Code	Connection		
700000 002	3/4" M	1	-

Water meters



7000

Template for domestic water meter.
Complete with:
- BALLSTOP ball shut-off valve with check valve;
- water meter;
- ball shut-off valve with male terminal;
- technopolymer flushing pipe template (T max. 55 °C);
- mounting bracket.

Medium: domestic water
Permanent flow rate (Domestic water circuit) (Q3): 4,0 m^3/h
Nominal pressure: PN 16

ATTESTATION DE CONFORMITÉ SANITAIRE ACS 2014/32/UE (MI001)

Code	Connection	Notes	Medium temperature range (°C)	Pulse weight		
700050	3/4" M	DHW	30–90	-	1	-
700051	3/4" M	DHW	30–90	10 l/pulse	1	-
700052	3/4" M	DCW	0–50	-	1	-
700053	3/4" M	DCW	0–50	10 l/pulse	1	-



7000

Template for domestic water meter.
For 7942 series meter, 3/4" connections.
Complete with:
- BALLSTOP ball shut-off valve with check valve (inlet);
- ball shut-off valve (outlet);
- technopolymer flushing pipe template (T max. 55 °C);
- mounting bracket.

Code	Connection		
700009	3/4" M	2	10

Completion elements - single user with manifold



70028

Recessed box for PLURIMOD® and PLURIMOD® EASY.
Complete with:
- **couple of manifolds 662 series (3–8 connections) for fan coil systems**;
- painted door for interior use;
- composite mounting bracket with thermal break;
- full EPP insulation;
- 2 pairs of ball shut-off valves;
- 2 technopolymer flushing pipes (T max. 55 °C);
- 2 positioning hooks for 7000 series domestic water outlets with condensation collection tank.

Reversible installation for primary side on left-hand (factory setting) or right-hand side.

Height: 866 mm
Width: 600 mm
Depth: 140–180 mm

Code	Connection	Outlet connection		
70028C	3/4" M	3/4" M - 3 out.	1	-
70028D	3/4" M	3/4" M - 4 out.	1	-
70028E	3/4" M	3/4" M - 5 out.	1	-
70028F	3/4" M	3/4" M - 6 out.	1	-
70028G	3/4" M	3/4" M - 7 out.	1	-
70028H	3/4" M	3/4" M - 8 out.	1	-

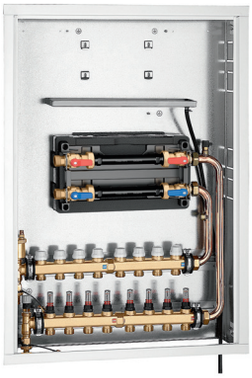

70026

Recessed box for PLURIMOD® and PLURIMOD® EASY.
Complete with:
- **couple of manifolds 664 series (3–8 connections) for underfloor heating systems**;
- painted door for interior use;
- composite mounting bracket with thermal break;
- full EPP insulation;
- 2 pairs of ball shut-off valves;
- 2 technopolymer flushing pipes (T max. 55 °C);
- 2 positioning hooks for 7000 series domestic water outlets with condensation collection tank.

Reversible installation for primary side on left-hand (factory setting) or right-hand side.

Height: 866 mm
Width: 600 mm
Depth: 140–180 mm

Code	Connection	Outlet connection		
70026C	3/4" M	3/4" M - 3 out.	1	-
70026D	3/4" M	3/4" M - 4 out.	1	-
70026E	3/4" M	3/4" M - 5 out.	1	-
70026F	3/4" M	3/4" M - 6 out.	1	-
70026G	3/4" M	3/4" M - 7 out.	1	-
70026H	3/4" M	3/4" M - 8 out.	1	-

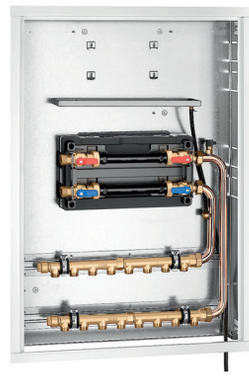

70029

Recessed box for PLURIMOD® and PLURIMOD® EASY.
Complete with:
- **couple of manifolds 350 series (3–8 connections) for radiator systems**;
- painted door for interior use;
- composite mounting bracket with thermal break;
- full EPP insulation;
- 2 pairs of ball shut-off valves;
- 2 technopolymer flushing pipes (T max. 55 °C);
- 2 positioning hooks for 7000 series domestic water outlets with condensation collection tank.

Reversible installation for primary side on left-hand (factory setting) or right-hand side.

Height: 866 mm
Width: 600 mm
Depth: 140–180 mm

Code	Connection	Outlet connection		
70029C	3/4" M	23 p. 1,5 - 3 out.	1	-
70029D	3/4" M	23 p. 1,5 - 4 out.	1	-
70029E	3/4" M	23 p. 1,5 - 5 out.	1	-
70029F	3/4" M	23 p. 1,5 - 6 out.	1	-
70029G	3/4" M	23 p. 1,5 - 7 out.	1	-
70029H	3/4" M	23 p. 1,5 - 8 out.	1	-

For applications in cooling systems, provide insulation of the connection pipes (to be carried out on site) and of the manifolds (insulation for series 662 and 664).

COMPACT USER MODULES WITH DYNAMIC BALANCING

PLURIMOD XM user modules

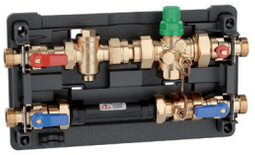

7004
PLURIMOD® XM

Self balanced user module.
Complete with:
- 2 pairs of 3/4" M ball valves;
- differential pressure control valve with presetting;
- technopolymer template for flow meter (T max. 55 °C);
- inspectable strainer with probe connection;
- technopolymer mounting bracket with thermal break;
- first flushing strainer;
- full EPP insulation;

To be coupled with thermo-elettric actuators 6565/6566 series.
With insulation.

Medium temperature range: 3–90 °C

Code	Flow rate working range (m^3/h)		
700475 002	0,04–0,34	1	-
700485 002	0,20–1,05	1	-

Compact user modules with automatic flow rate control



7002

User module with heat meter template.
Complete with:
- 2 pairs of 3/4" M ball valves;
- pressure independent control valve with presetting;
- technopolymer template for flow meter (T max. 55 °C);
- inspectable strainer with probe connection;
- technopolymer mounting bracket.

To be coupled with thermo-electric actuators 6565/6566 series.

Medium temperature range: 3–90 °C

Code	Flow rate regulation (m^3/h)		
700255 H20	0,02–0,20	1	-
700255 1H2	0,12–1,20	1	-
700255 H40	0,08–0,40	1	-

Actuators



6565

Thermo-electric actuator for FLOWMATIC 145 series control valve and 149 series kit.
Quick-coupling installation with fixing clip adaptor.
Normally closed.

Ambient temperature range: 0–60 °C
Running power consumption: 1 W
Protection class: IP 54
Supply cable length: 1 m
Control signal: ON/OFF

CE

Code	Electric supply		
656502	230 V AC	1	100
656504	24 V AC/DC	1	100



6566

Thermo-electric actuator.
For FLOWMATIC 145 series control valve,149 series kit, user modules 7002 and 7004 series.
Quick-coupling installation with fixing clip adaptor.
Normally open.

Ambient temperature range: 0–60 °C
Running power consumption: 1 W
Protection class: IP 54
Supply cable length: 1 m
Control signal: ON/OFF

CE

Code	Electric supply		
656602	230 V AC	1	100
656604	24 V AC/DC	1	100

COOLING INTERFACE UNIT

Cooling interface unit

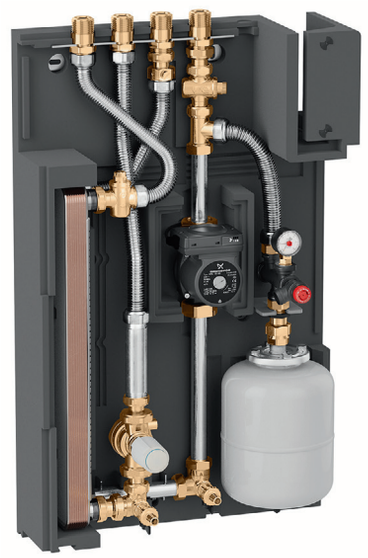

797

Wall-hanging cooling interface unit.
Complete with:
- pressure independant control valve;
- electro-thermic actuator;
- plate heat exchanger;
- high efficiency pump;
- 5 L expansion vessel;
- safety relief valve (3 bar setting);
- suitable for CONTECA EASY codes 750405G or 750705G heat meters, with 755810 option.

With insulation.

Maximum working pressure: 16 bar
Medium temperature range: 3–85 °C
Electric supply: 230 V AC
Maximum percentage of glycol: 30 %
Medium: water, glycol solutions
Height: 780 mm
Width: 480 mm
Depth: 220 mm
△p max.: 4 bar

Code	Connection	Nominal heat exchanger capacity (kW)		
797601	1" M	3	1	-
797603	1" M	8	1	-
797605	1" M	15	1	-

Hydraulic diagram 797 series

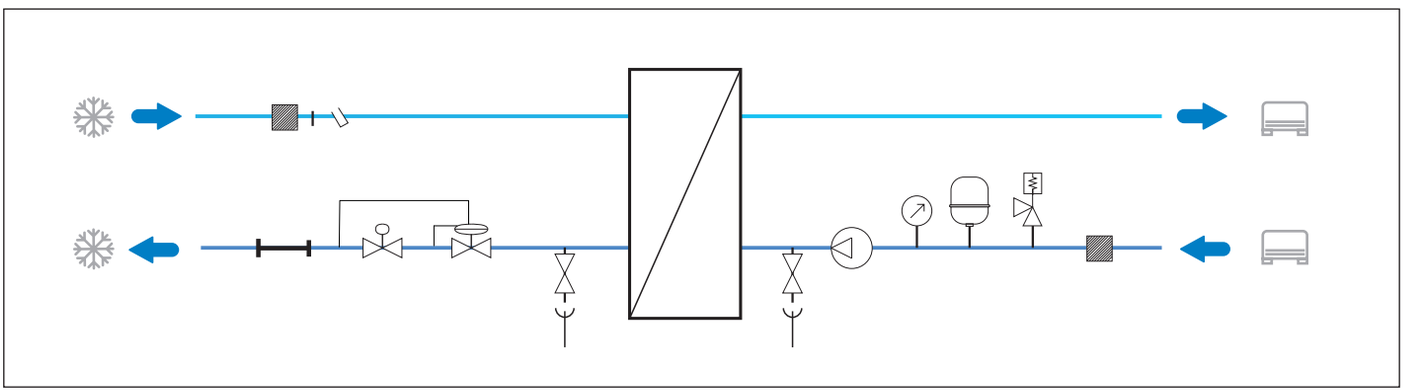

SUPPLY UNITS SUITABLE FOR HEAT METERING

Direct supply units

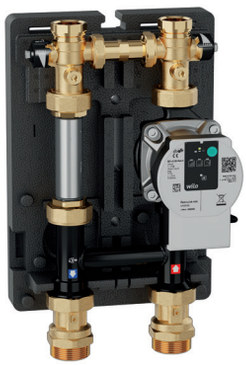

765

Direct supply unit DN 25 for **heating and cooling systems**.
Factory configuration: upstream flow - supply on the RH side.
Complete with:
- high efficiency pump;
- designed for the installation of CONTECA EASY code 750405G or 750705G heat meters.

RH/LH reversible.
With insulation.

Maximum working pressure: 10 bar
Medium temperature range: 5–90 °C
Electric supply: 230 V AC
Main centre distance: 125 mm
Flow rate with available head 4 m w.g.: 2,1 m^3/h
Type of pump: Para 25-9

CE

Code	Boiler side connection	System side connection		
765600HE	1 1/2″M	1″F	1	-

Motorised regulating units



767

Motorised regulating unit DN 25, for **heating and cooling systems**.
Factory configuration: upstream flow - supply on the RH side.
Complete with:
- high-efficiency pump;
- motorised mixing valve;
- designed for heat meter installation CONTECA EASY codes 750405G or 750705G.

RH/LH reversible.
With insulation.
With auxiliary microswitch.

Maximum working pressure: 10 bar
Medium temperature range: 5–90 °C
Adjustment temperature range: 25–50 °C
Main centre distance: 125 mm
Type of pump: Para 25-9

CE

Code	Boiler side connection	System side connection	Electric supply	Control signal		
767662HE2	1 1/2″M	1″F	230 V AC	3 point	1	-
767664HE2	1 1/2″M	1″F	24 V AC/DC	0–10 V	1	-

Thermostatic regulating units



766

Thermostatic regulating unit DN 25 for **heating systems**.
Factory configuration: upstream flow - supply on the RH side.
Complete with:
- high efficiency pump;
- designed for the installation of CONTECA EASY code 750405G or 750705G heat meters.

RH/LH reversible.
With insulation.

Maximum working pressure: 10 bar
Medium temperature range: 5–90 °C
Adjustment temperature range: 25–50 °C
Electric supply: 230 V AC
Main centre distance: 125 mm
Flow rate with available head 4 m w.g.: 2,1 m^3/h
Type of pump: Para 25-9

CE

Code	Boiler side connection	System side connection		
766600HE	1 1/2″M	1″F	1	-

WALL MOUNTED HEAT INTERFACE UNITS WITH ELECTRONIC REGULATION

Direct heat interface unit with advanced electronic regulation

SATK22

Electronic wall-hanging HIU **for low temperature heating system**.
Complete with:
- differential pressure control valve;
- modulating control valves;
- thermal safety thermostat and valve;
- high efficiency pump (primary circuit);
- plate heat excganger (DHW circuit);
- user interface with chronothermostat option;
- suitable to CONTECA EASY 7504K and 7507K series heat meters.

Main electronic functions:
- DHW exchanger preheating programmable on hourly base;
- primary flow limitation;
- outside compensated temperature regulation.

With insulation.

Maximum working pressure: 10 bar
△p max.: 6 bar
Primary inlet working temperature range: 2–90 °C
Adjustment temperature range (heating system): 25–45 °C
Adjustment temperature range (DHW): 42–60 °C
Maximum DHW instantaneous production: 24 l/min
Electric supply: 230 V AC
Running power consumption: 80 W
Height: 500 mm
Width: 490 mm
Depth: 245 mm



CE

Code	Notes	Nominal heat exchanger capacity		
SATK22103	-	50 kW	1	-
SATK22105	-	60 kW	1	-
SATK22107	for systems with low primary temperature	-	1	-

Hydraulic diagram SATK22 - LOW temperature

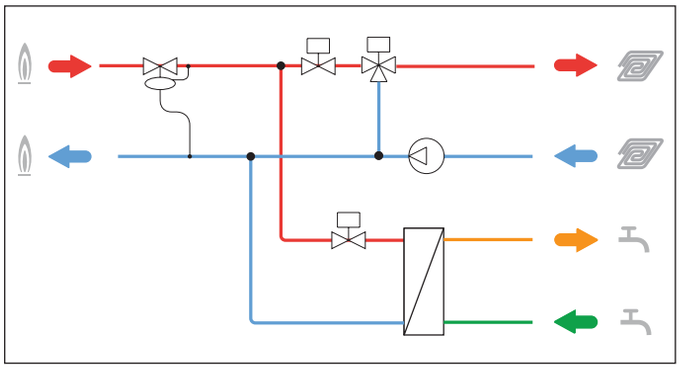

SATK22

Electronic wall-hanging HIU **for medium temperature heating system**.
Complete with:
- differential pressure control valve;
- modulating control valves;
- high efficiency pump (primary circuit);
- plate heat excganger (DHW circuit);
- user interface with chronothermostat option;
- suitable to CONTECA EASY 7504K and 7507K series heat meters.

Main electronic functions:
- DHW exchanger preheating programmable on hourly base;
- primary flow limitation;
- outside compensated temperature regulation.

With insulation.

Maximum working pressure: 10 bar
△p max.: 6 bar
Primary inlet working temperature range: 2–90 °C
Adjustment temperature range (heating system): 45–75 °C
Adjustment temperature range (DHW): 42–60 °C
Maximum DHW instantaneous production: 24 l/min
Electric supply: 230 V AC
Running power consumption: 80 W
Height: 500 mm
Width: 490 mm
Depth: 245 mm



CE

Code	Notes	Nominal heat exchanger capacity		
SATK22203	-	50 kW	1	-
SATK22205	-	60 kW	1	-
SATK22207	for systems with low primary temperature	-	1	-

Hydraulic diagram SATK22 - MEDIUM temperature

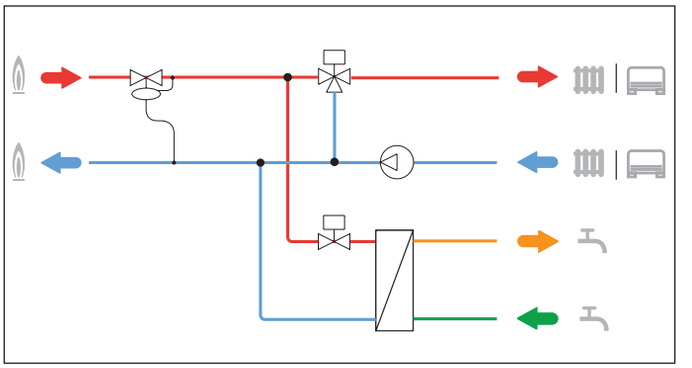

SATK22

Electronic wall-hanging HIU **for high temperature heating system**.
Complete with:
- differential pressure control valve;
- modulating control valves;
- plate heat excganger (DHW circuit);
- user interface with chronothermostat option;
- suitable to CONTECA EASY 7504K and 7507K series heat meters.

Main electronic functions:
- DHW exchanger preheating programmable on hourly base;
- primary flow limitation;
- outside compensated temperature regulation.

With insulation.

Maximum working pressure: 10 bar
△p max.: 6 bar
Primary inlet working temperature range: 2–90 °C
Adjustment temperature range (DHW): 42–60 °C
Maximum DHW instantaneous production: 24 l/min
Electric supply: 230 V AC
Running power consumption: 20 W
Height: 500 mm
Width: 490 mm
Depth: 245 mm

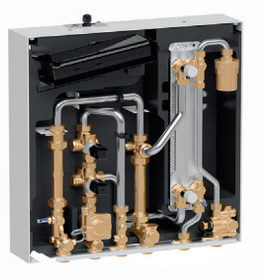

CE

Code	Notes	Nominal heat exchanger capacity		
SATK22303	-	50 kW	1	-
SATK22305	-	60 kW	1	-
SATK22307	for systems with low primary temperature	-	1	-

Hydraulic diagram SATK22 - HIGH temperature

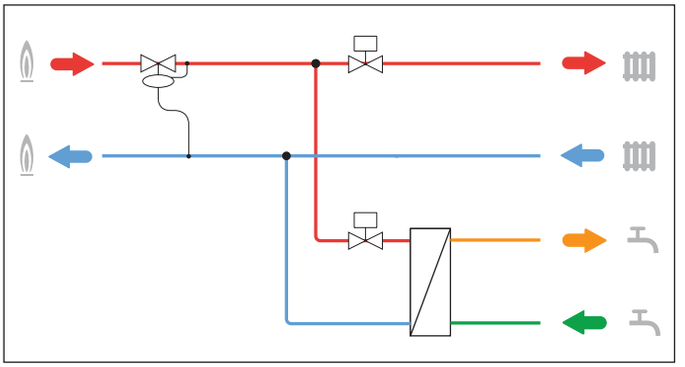

SATK22

Electronic wall-hanging HIU **for high temperature heating system with primary pump**.
Complete with:
- differential pressure control valve;
- modulating control valves;
- high efficiency pump (primary circuit);
- plate heat excganger (DHW circuit);
- user interface with chronothermostat option;
- suitable to CONTECA EASY 7504K and 7507K series heat meters.

Main electronic functions:
- DHW exchanger preheating programmable on hourly base;
- primary flow limitation;
- outside compensated temperature regulation.

With insulation.

Maximum working pressure: 10 bar
△p max.: 6 bar
Primary inlet working temperature range: 2–90 °C
Adjustment temperature range (DHW): 42–60 °C
Maximum DHW instantaneous production: 24 l/min
Electric supply: 230 V AC
Running power consumption: 80 W
Height: 500 mm
Width: 490 mm
Depth: 245 mm



CE

Code	Notes	Nominal heat exchanger capacity		
SATK22403	-	50 kW	1	-
SATK22405	-	60 kW	1	-
SATK22407	for systems with low primary temperature	-	1	-

Hydraulic diagram SATK22 - HIGH temperature, with booster pump

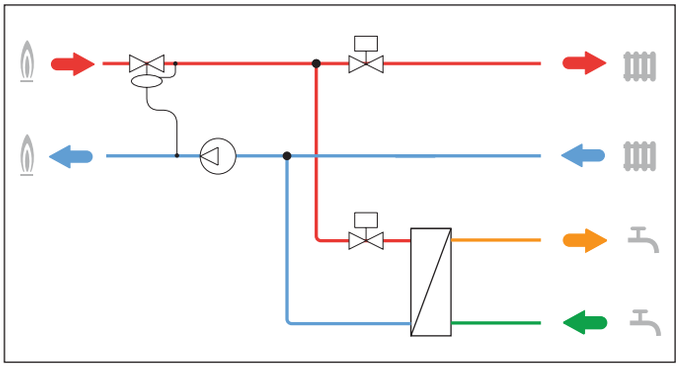

Indirect heat interface unit with advanced electronic regulation

SATK32

Electronic wall-hanging HIU **with hydraulic separation**.
Complete with:
- differential pressure control valve;
- modulating control valves;
- thermal safety thermostat;
- high efficiency pump (heating circuit);
- plate heat excganger (DHW circuit);
- plate heat excganger (heating circuit);
- 7 L expansion vessel;
- safety relief valve (3 bar setting);
- automatic filling unit with CB type backflow preventer;
- suitable to CONTECA EASY 7504K and 7507K series heat meters.

Main electronic functions:
- DHW exchanger preheating programmable on hourly base;
- return temperature control;
- primary flow limitation;
- outside compensated temperature regulation.

With insulation.

Maximum working pressure: 16 bar
△p max.: 6 bar
Primary inlet working temperature range: 2–90 °C
Adjustment temperature range (heating system): 25–75 °C
Adjustment temperature range (DHW): 42–60 °C
Maximum DHW instantaneous production: 24 l/min
Electric supply: 230 V AC
Running power consumption: 80 W
Height: 630 mm
Width: 490 mm
Depth: 245 mm

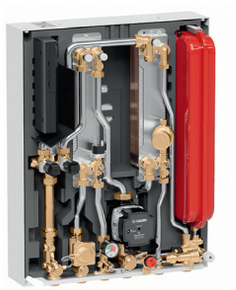

CE

Code	Notes	Nominal heat exchanger capacity		
SATK32103	-	50 kW	1	-
SATK32105	-	60 kW	1	-
SATK32107	for systems with low primary temperature	-	1	-

Hydraulic diagram SATK32

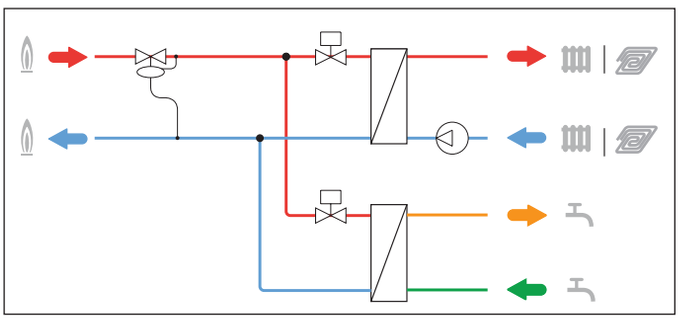

Completion codes for heat interface units with advanced electronic regulation



572

Filling loop with CB type backflow preventer.

Code	Article use		
572120	SATK32103, SATK32105, SATK32107	1	10



789

Mounting template with shut-off valve.

Code	Connection		
789023	3/4" M	1	-



789

Insulation for code 789023.
Material: closed cell expanded PE-X.
Minimum thickness: 10 mm
Reaction to fire (DIN 4102): B2 class.

Code	Article use		
789332	789023	10	-



789

Outside temperature probe for SATK22 and SATK32.
For SATK22 and SATK32 series.

Code			
789833		1	10



789

Drain conveyor pipe for SATK32.

Code	Article use		
789832	SATK32103, SATK32105, SATK32107	1	30

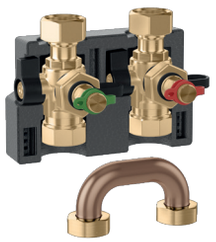

789 NEW

Pair of three-way flushing valves with removable bypass and preinstalled PT ports.
Complete with:
- lateral levers with flow direction markings;
- frontal caps with preinstalled PT ports;
- U-shaped copper by-pass pipe;
- full EPP insulation with internal by-pass holder.

With insulation.

Maximum working pressure: 16 bar
Medium temperature range: 5–90 °C
Main centre distance: 70 mm

Code	HIU side connection	Primary connection		
789112	3/4" F	Ø 22	1	5

Direct heat interface unit with basic electronic regulation

SATK20

Mechanical wall-hanging HIU **for low temperature heating system**.
Complete with:
- modulating control valves;
- thermal safety thermostat and valve;
- high efficiency pump (heating circuit);
- plate heat excganger (DHW circuit);
- PPE insulation cover;
- suitable to CONTECA EASY 7504K and 7507K series heat meters.

Main electronic functions:
- DHW exchanger preheating;
- compensated set point regulation.

Maximum working pressure: 10 bar
△p max.: 0,9 bar
Primary inlet working temperature range: 2–85 °C
Adjustment temperature range (heating system): 25–45 °C
Adjustment temperature range (DHW): 42–60 °C
Maximum DHW instantaneous production: 18 l/min
Electric supply: 230 V AC
Running power consumption: 80 W
Height: 550 mm
Width: 450 mm
Depth: 265 mm



CE

Code	Nominal heat exchanger capacity (kW)		
SATK20103HE	40	1	-

SATK20

Electronic wall-hanging HIU **for medium temperature heating system**.
Complete with:
- modulating control valves;
- high efficiency pump (heating circuit);
- plate heat excganger (DHW circuit);
- PPE insulation cover;
- suitable to CONTECA EASY 7504K and 7507K series heat meters.

Main electronic functions:
- DHW exchanger preheating;
- compensated set point regulation.

Maximum working pressure: 10 bar
△p max.: 0,9 bar
Primary inlet working temperature range: 2–85 °C
Adjustment temperature range (heating system): 45–75 °C
Adjustment temperature range (DHW): 42–60 °C
Maximum DHW instantaneous production: 18 l/min
Electric supply: 230 V AC
Running power consumption: 80 W
Height: 550 mm
Width: 450 mm
Depth: 265 mm



CE

Code	Nominal heat exchanger capacity (kW)		
SATK20203HE	40	1	-

Hydraulic diagram SATK20 - LOW temperature

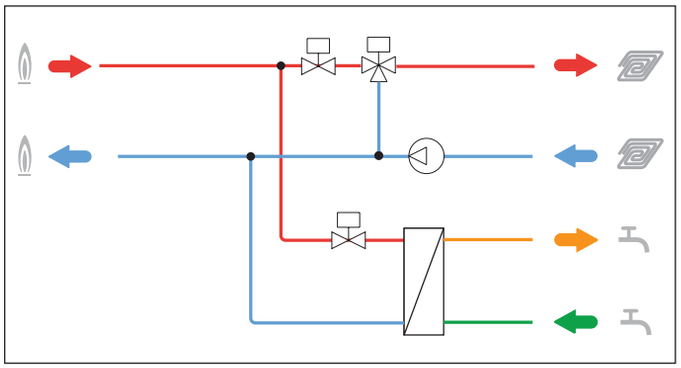

Hydraulic diagram SATK20 - MEDIUM temperature

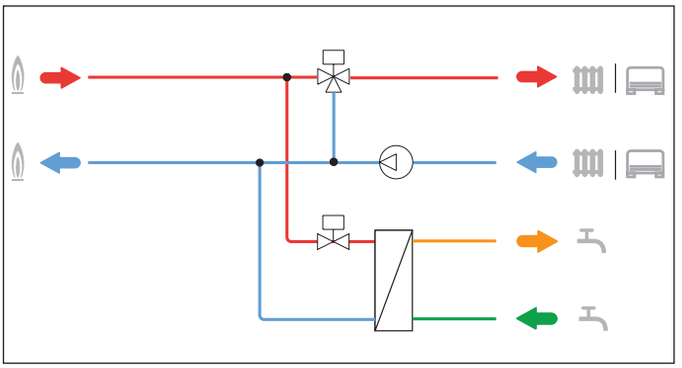

SATK20

Electronic wall-hanging HIU **for high temperature heating system**.
Complete with:
- modulating control valves;
- plate heat excganger (DHW circuit);
- PPE insulation cover;
- suitable to CONTECA EASY 7504K and 7507K series heat meters.

Main electronic functions:
- DHW exchanger preheating.

Maximum working pressure: 10 bar
△p max.: 0,9 bar
Primary inlet working temperature range: 2–85 °C
Adjustment temperature range (DHW): 42–60 °C
Electric supply: 230 V AC
Running power consumption: 20 W
Height: 550 mm
Width: 450 mm
Depth: 265 mm



CE

Code	Nominal heat exchanger capacity (kW)	Maximum DHW instantaneous production (l/min)		
SATK20303	40	18	1	-
SATK20305	65	27	1	-

SATK20

Electronic wall-hanging HIU **for high temperature heating system with primary pump**.
Complete with:
- modulating control valves;
- high efficiency pump (primary circuit);
- plate heat excganger (DHW circuit);
- PPE insulation cover;
- suitable to CONTECA EASY 7504K and 7507K series heat meters.

Main electronic functions:
- DHW exchanger preheating.

Maximum working pressure: 10 bar
△p max.: 0,9 bar
Primary inlet working temperature range: 2–85 °C
Adjustment temperature range (DHW): 42–60 °C
Maximum DHW instantaneous production: 18 l/min
Electric supply: 230 V AC
Running power consumption: 80 W
Height: 550 mm
Width: 450 mm
Depth: 265 mm



CE

Code	Nominal heat exchanger capacity (kW)		
SATK20403HE	40	1	-

Hydraulic diagram SATK20 - HIGH temperature

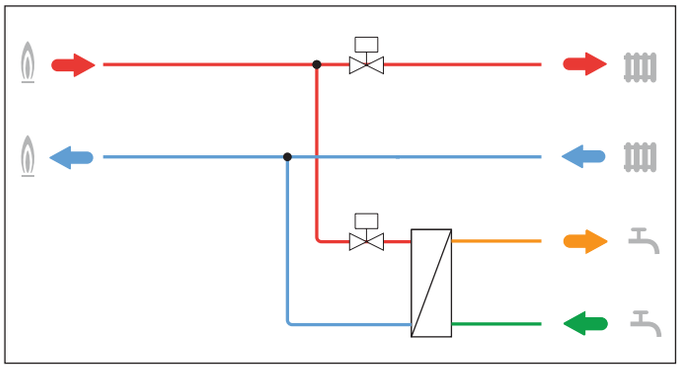

Hydraulic diagram SATK20 - HIGH temperature, with booster pump

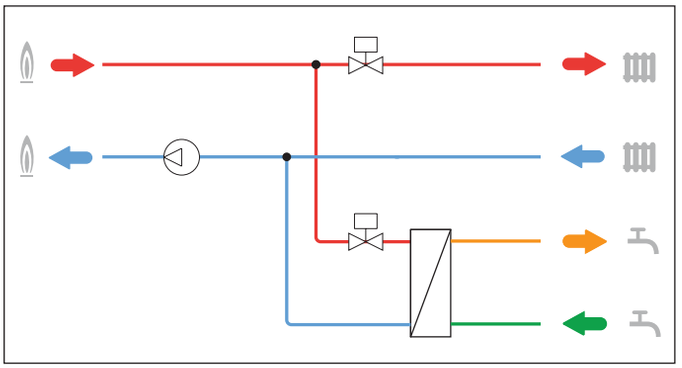

Indirect heat interface unit with basic electronic regulation

SATK30

Electronic wall-hanging HIU **with hydraulic separation**.
Complete with:
- modulating control valves;
- thermal safety thermostat;
- high efficiency pump (heating circuit);
- plate heat excganger (DHW circuit);
- plate heat excganger (heating circuit);
- 7 L expansion vessel;
- safety relief valve (3 bar setting);
- automatic filling unit with CB type backflow preventer;
- PPE insulation cover;
- suitable to CONTECA EASY 7504K and 7507K series heat meters.

Main electronic functions:
- DHW exchanger preheating programmable on hourly base;
- outside compensated temperature regulation.

Maximum working pressure: 16 bar
△p max.: 1,65 bar
Primary inlet working temperature range: 2–85 °C
Adjustment temperature range (heating system): 25–75 °C
Adjustment temperature range (DHW): 42–60 °C
Electric supply: 230 V AC
Running power consumption: 80 W
Height: 630 mm
Width: 550 mm
Depth: 265 mm



CE

Code	Nominal heat exchanger capacity (kW)	Maximum DHW instantaneous production (l/min)		
SATK30103HE	40	18	1	-
SATK30105HE	65	27	1	-

Hydraulic diagram SATK30

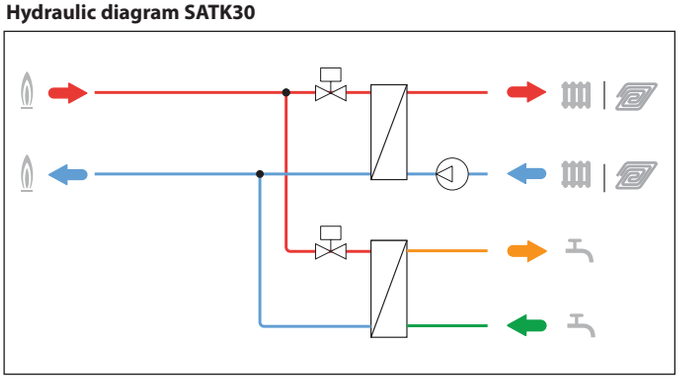

Indirect heat interface unit for storage DHW production

SATK40

Electronic wall-hanging HIU **with hydraulic separation for storage DHW production**.
Complete with:
- modulating control valve;
- diverting valve;
- thermal safety thermostat;
- high efficiency pump;
- plate heat excganger;
- 7 L expansion vessel;
- safety relief valve (3 bar setting);
- automatic filling unit with CB type backflow preventer;
- PPE insulation cover;
- suitable to CONTECA EASY 7504K and 7507K series heat meters.

Main electronic functions:
- outside compensated temperature regulation.

Maximum working pressure: 16 bar
△p max.: 1,65 bar
Primary inlet working temperature range: 2–85 °C
Electric supply: 230 V AC
Running power consumption: 80 W
Height: 630 mm
Width: 550 mm
Depth: 265 mm



CE

Code		
SATK40103HE	1	-

Hydraulic diagram SATK40

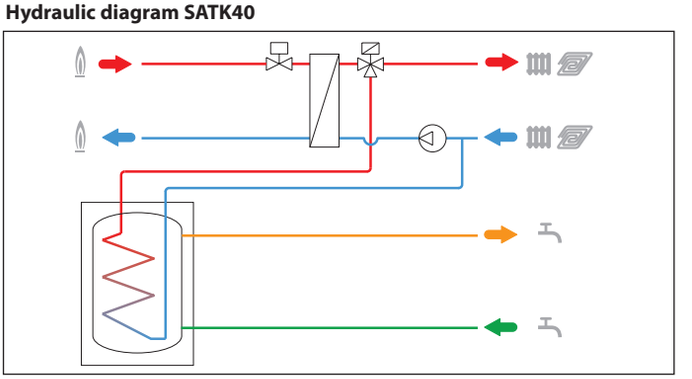

Heat interface unit for DHW production only

SATK10

Electronic wall-hanging HIU for domestic hot water production only.

Maximum working pressure: 10 bar
△p max.: 0,9 bar
Primary inlet working temperature range: 2–85 °C
Adjustment temperature range (DHW): 42–60 °C
Electric supply: 230 V AC
Running power consumption: 80 W
Height: 350 mm
Width: 476 mm
Depth: 188 mm

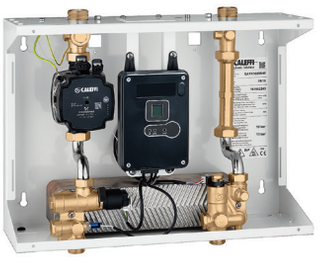

CE

Code	Notes	Nominal heat exchanger capacity (kW)	Maximum DHW instantaneous production (l/min)		
SATK10203HE	-	40	18	1	-
SATK10204HE	-	65	25	1	-
SATK10205HE	-	75	27	1	-
SATK10253	without primary pump	40	18	1	-
SATK10254	without primary pump	65	25	1	-
SATK10255	without primary pump	75	27	1	-

Completion codes for heat interface units with electronic regulation



789

Mounting template with shut-off valves for supply connection on the bottom side.
Complete with bottom-up system connection pipes.

Depth: 60 mm

Code	Notes		
789020	for SATK20 series	1	-
789030	for SATK30 and SATK40 series	1	-



789

System flushing valve with shut-off by-pass.
For SATK20, SATK30 and SATK40 series.

Code	Connection		
789100	3/4″ M	1	25



789

Ball shut-off valve kit for secondary circuit.

Maximum working pressure: 10 bar
Medium temperature range: 5–90 °C
Maximum percentage of glycol: 30 %
Medium: water, glycol solutions

Code	Notes		
789103	for SATK20 and SATK30 series	1	10
789104	for SATK40 series.	1	10

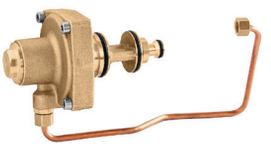

789

Differential pressure control valve with fixed setting.
For SATK20, SATK30 and SATK40 series.

Maximum working pressure: 16 bar
△p max.: 6 bar

Code		
789603	1	-



7945

Template for domestic water meter.
Complete with:
- ball shut-off valve with built-in check valve BALLSTOP (inlet);
- flushing pipe template.

For SATK20, SATK30, SATK50 and SATK60 series.
Suitable for the use with volume meter cod 794204.

Code	Connection		
794540	3/4″ M	1	-



7942

Water meter with pulse output.
Complete with fittings.

Medium: domestic water
Pulse weight: 10 l/pulse
Nominal pressure: PN 16
Probe/cable length: 1 m

ATTESTATION DE CONFORMITÉ SANITAIRE ACS 2014/32/UE (MI001)

Code	Connection	Notes	Medium temperature range (°C)	Permanent flow rate (DW) (Q3) (m^3/h)		
794204	1/2″ M	DCW*	0–50	2,5	1	5

MECHANICAL WALL MOUNTED HEAT INTERFACE UNIT

Mechanical wall mounted heat interface unit

SATK15

Mechanical wall-hanging HIU for high temperature heating system.
Complete with:
- differential pressure control valve with fixed setting;
- diverter valve for DHW priority;
- proportional mechanical flow rate control valve;
- plate heat exchanger (DHW circuit).

Maximum working pressure: 10 bar
△p max.: 2 bar
Maximum DHW instantaneous production: 18 l/min

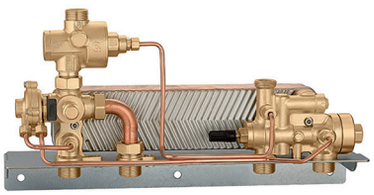

Code	Notes		
SATK15324 DPCV	-	1	-
SATK15325 DPCV	for systems with low primary temperature	1	-

SATK15

Mechanical wall-hanging HIU for high temperature heating system wit bottom connections.
Complete with:
- differential pressure control valve with fixed setting;
- diverter valve for DHW priority;
- proportional mechanical flow rate control valve;
- plate heat exchanger (DHW circuit);
- suitable to CONTECA EASY codes 750405G or 750705G heat meters.

Instantaneous DHW production.

Maximum working pressure: 10 bar
△p max.: 2 bar
Maximum DHW instantaneous production: 18 l/min

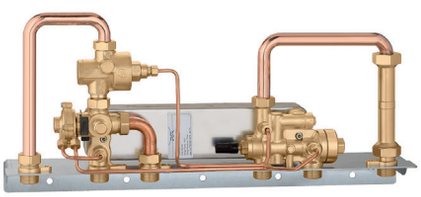

Code	Notes		
SATK15324 ABC	-	1	-
SATK15325 ABC	for systems with low primary temperature	1	-

SATK16

Mechanical wall-hanging HIU.
Complete with:
- differential pressure control valve with fixed setting;
- diverter valve for DHW priority;
- proportional mechanical flow rate control valve;
- plate heat exchanger (DHW circuit);
- heating zone valve with thermoeelctri actuator;
- thermostatic mixing valve;
- suitable to CONTECA EASY codes 750405G or 750705G heat meters.

Instantaneous DHW production.

Maximum working pressure: 10 bar
Depth: 200 mm
Height: 450 mm
Width: 420 mm
△p max.: 2 bar
△p max. - Notes: primary circuit
Primary inlet working temperature range: 2–85 °C

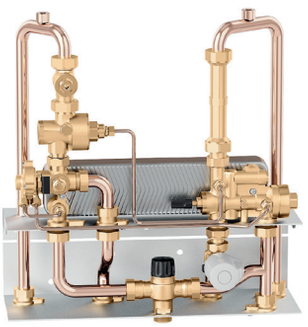

Code			
SATK16315		1	-

Completion codes for mechanical heat interface units



789

Insulation for SATK15 series.

Code	Article use		
789323	SATK15324 DPCV	1	-
789325	SATK15325 DPCV	1	-
789314	SATK15324 ABC, SATK15325 ABC	1	-



789

Ball shut-off valve kit.
For serie SATK15.

Maximum working pressure: 10 bar
Medium temperature range: 5–90 °C

Code			
789101		1	10

RECESS MOUNTED HEAT INTERFACE UNIT WITH ELECTRONIC REGULATION

Recess mounted direct heat interface unit with basic regulation

SATK50

Electronic recessed HIU **for low temperature heating system**.
Complete with:
- high temperature additional outlet;
- modulating control valve;
- thermal safety thermostat;
- high efficiency pump (heating circuit);
- plate heat excganger (DHW circuit);
- suitable to CONTECA EASY 7504K and 7507K heat meters.

Main electronic functions:
- DHW exchanger preheating programmable on hourly base;
- outside compensated temperature regulation.

Maximum working pressure: 10 bar
△p max.: 0,9 bar
Primary inlet working temperature range: 2–85 °C
Adjustment temperature range (DHW): 42–60 °C
Adjustment temperature range (heating system): 25–45 °C
Maximum DHW instantaneous production: 18 l/min
Electric supply: 230 V AC
Running power consumption: 80 W
Height: 410 mm
Width: 570 mm
Depth: 110 mm

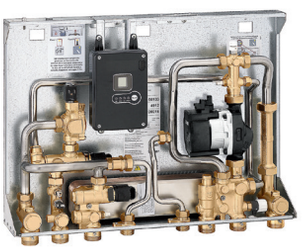

CE

Code	Notes	Nominal heat exchanger capacity (kW)		
SATK50103HE	for recessed box installation	40	1	-
SATK50193HE	for wall hanging installation, without box (*)	40	1	-
SATK50193HE 001	for wall hanging installation, without box (*)	40	1	-

(*) It is necessary to use the shut-off valve kit code F0001495.

SATK50

Electronic recessed HIU **for medium temperature heating system**.
Complete with:
- modulating control valves;
- high efficiency pump (heating circuit);
- plate heat excganger (DHW circuit);
- suitable to CONTECA EASY 7504K and 7507K heat meters.

Main electronic functions:
- DHW exchanger preheating programmable on hourly base;
- outside compensated temperature regulation.

Maximum working pressure: 10 bar
△p max.: 0,9 bar
Primary inlet working temperature range: 2–85 °C
Adjustment temperature range (DHW): 42–60 °C
Adjustment temperature range (heating system): 45–75 °C
Maximum DHW instantaneous production: 18 l/min
Electric supply: 230 V AC
Running power consumption: 80 W
Height: 410 mm
Width: 570 mm
Depth: 110 mm

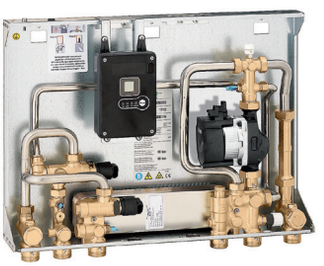

CE

Code	Notes	Nominal heat exchanger capacity (kW)		
SATK50203HE	for recessed box installation	40	1	-
SATK50293HE	for wall hanging installation, without box (*)	40	1	-

(*) It is necessary to use the shut-off valve kit code F0001495.

Hydraulic diagram SATK50 - LOW temperature

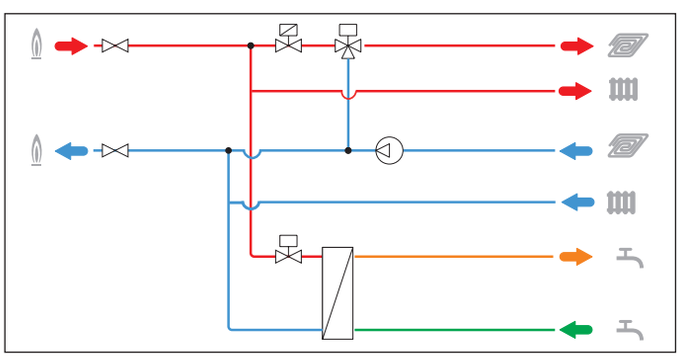

Hydraulic diagram SATK50 - MEDIUM temperature

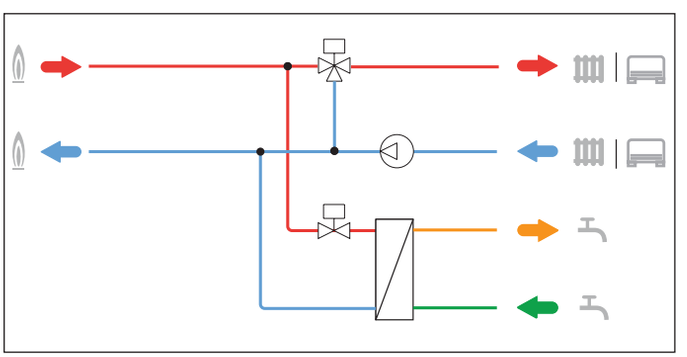

SATK50

Electronic recessed HIU **for high temperature heating system.**
Complete with:
- modulating control valves;
- plate heat exchanger (DWH circuit);
- suitable to CONTECA EASY cod. 750405G o 750705G heat meters.

Main electronic functions:
- DWS heat exchanger preheating.

Maximum working pressure: 10 bar
△p max.: 0,9 bar
△p max. - Notes: primary circuit
Primary inlet working temperature range: 2–85 °C
Adjustment temperature range (DHW): 42–60 °C
Maximum DHW instantaneous production: 18 l/min
Electric supply: 230 V AC
Running power consumption: 20 W
Height: 410 mm
Width: 570 mm
Depth: 110 mm

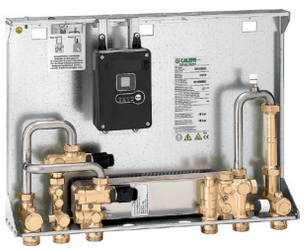

CE

Code	Notes	Nominal heat exchanger capacity (kW)		
SATK50303	for recessed box installation	40	1	-
SATK50393	for wall hanging installation, without box (*)	40	1	-
SATK50393 001	for wall hanging installation, without box, with insulation cover (*)	40	1	-

(*) It is necessary to use the shut-off valve kit code F0001495.

Hydraulic diagram SATK50 - HIGH temperature

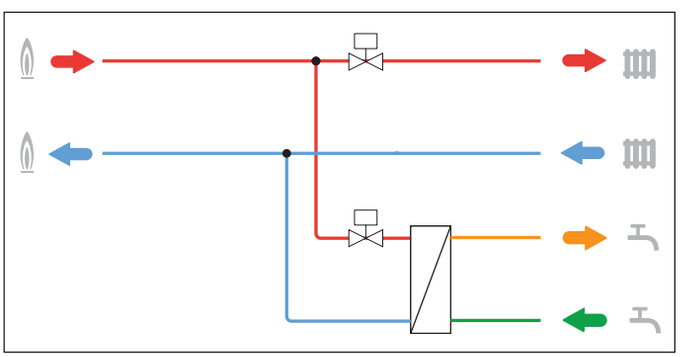



Ball shut-off valves kit.

Maximum working pressure: 10 bar
Medium temperature range: 5–90 °C

Code	Notes		
F0001495	valve kit for SATK50.93HE/SATK60193HE	1	5



7945

Template for domestic water meter.
Complete with:
- ball shut-off valve with built-in check valve BALLSTOP (inlet);
- flushing pipe template.

For SATK20, SATK30, SATK50 and SATK60 series.
Suitable for the use with volume meter cod 794204.

Code	Connection		
794540	3/4" M	1	-



7942

Water meter with pulse output.
Complete with fittings.

Medium: domestic water
Pulse weight: 10 l/pulse
Nominal pressure: PN 16
Probe/cable length: 1 m

ATTESTATION DE CONFORMITÉ SANITAIRE ACS 2014/32/UE (MI001)

Code	Connection	Notes	Medium temperature range (°C)	Permanent flow rate (DW) (Q3) (m^3/h)		
794204	1/2" M	DCW*	0–50	2,5	1	5



7949

Recessed box for SATK50.
Complete with:
- painted sheet metal box;
- ball shut-off valves.

For SATK50 series.

Height: 700 mm
Width: 600 mm
Depth: 120 mm

Code		
794950	1	-

Recess mounted indirect heat interface unit with basic regulation

SATK60

Compact recessed indirect heat interface unit **with hydraulic separation**.
Complete with:
- modulating control valves;
- thermal safety thermostat;
- high-efficiency pump (heating circuit);
- plate heat exchanger (DWS circuit);
- plate heat exchanger (heating circuit);
- expansion vessel 7 L;
- safety valve (setting 3 bar);
- charging unit with CB-type backflow preventer;
- suitable to CONTECA EASY cod. 750405G o 750705G heat meters.

Main electronic functions:
- DWS heat exchanger preheating;
- compensated set point regulation.

Maximum working pressure: 16 bar
△p max.: 1,65 bar
Primary inlet working temperature range: 2–85 °C
Adjustment temperature range (DHW): 42–60 °C
Adjustment temperature range (heating system): 25–75 °C
Maximum DHW instantaneous production: 18 l/min
Electric supply: 230 V AC
Running power consumption: 80 W
Height: 590 mm
Width: 570 mm
Depth: 110 mm

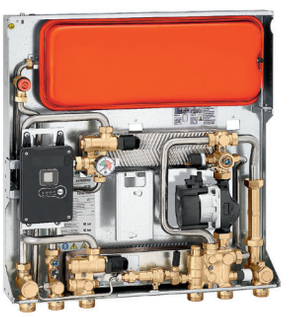

CE

Code	Notes	Nominal heat exchanger capacity (kW)		
SATK60103HE	for recessed box installation	40	1	-
SATK60193HE	for wall hanging installation, without box (*)	40	1	-

(*) It is necessary to use the shut-off valve kit code F0001495.

Hydraulic diagram SATK60

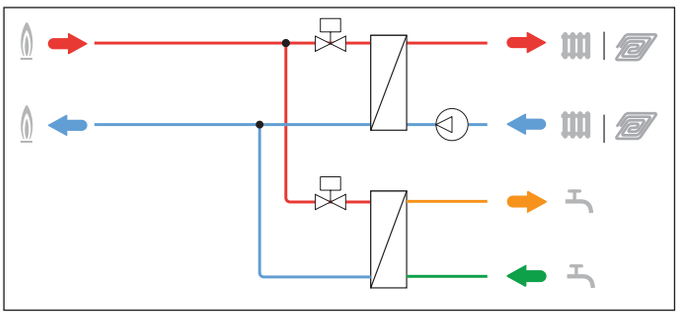



Ball shut-off valves kit.

Maximum working pressure: 10 bar
Medium temperature range: 5–90 °C

Code	Notes		
F0001495	valve kit for SATK50.93HE/SATK60193HE	1	5

7945



Template for domestic water meter.
Complete with:
- ball shut-off valve with built-in check valve BALLSTOP (inlet);
- flushing pipe template.

For SATK20, SATK30, SATK50 and SATK60 series.
Suitable for the use with volume meter cod 794204.

Code	Connection		
794540	3/4″ M	1	-

7942



Water meter **with pulse output**.
Complete with fittings.

Medium: domestic water
Pulse weight: 10 l/pulse
Nominal pressure: PN 16
Probe/cable length: 1 m

ATTESTATION DE CONFORMITÉ SANITAIRE ACS 2014/32/UE (MI001)

Code	Connection	Notes	Medium temperature range (°C)	Permanent flow rate (DW) (Q3) (m^3/h)		
794204	1/2″ M	DCW*	0–50	2,5	1	5

7949



Recessed box for SATK60.
Complete with:
- painted sheet metal box;
- ball shut-off valves.

For SATK60 series.

Height: 890 mm
Width: 625 mm
Depth: 120 mm

Code		
794960	1	-

COMPLEMENTARY HEAT METERS

Complementary heat meters



7504G CONTECA® EASY

Direct heat meter for heating and cooling systems (*).
Complete with:
- electronic integrator with LCD display;
- pair of immersion temperature probes;
- turbine volume meter with pulse output;
- 2 pulse inputs for DHW and DCW.

Upgradable with configuration options to be ordered together (*).

Medium temperature range: 2–90 °C
Nominal pressure: PN 16
Accuracy class: 3
Probe/cable length: 1 m
Electric supply: 24 V AC
Running power consumption: 1 W
Protection class: IP 54
Communication protocol: M-Bus on RS485

CE 2014/32/UE (MI004)

Code	Connection	Permanent flow rate (Qp) (m^3/h)	Minimum flow rate (Qi) (l/h)	Measure type		
750405G	1″M	2,5	50	single nozzle	1	-



7504K CONTECA® EASY

Direct heat meter for heating and cooling systems (*).
Complete with:
- electronic integrator with LCD display;
- pair of immersion temperature probes;
- turbine volume meter with pulse output;
- mounting brackets;
- pulse input for DCW.

Upgradable with configuration options to be ordered together (*).

Medium temperature range: 2–90 °C
Nominal pressure: PN 16
Accuracy class: 3
Probe/cable length: 1 m
Electric supply: 24 V AC
Running power consumption: 1 W
Protection class: IP 54
Communication protocol: M-Bus on RS485

CE 2014/32/UE (MI004)

Code	Connection	Permanent flow rate (Qp) (m^3/h)	Minimum flow rate (Qi) (l/h)	Measure type		
750405K	1″M	2,5	50	single nozzle	1	-



7507G CONTECA® EASY ULTRA

Direct heat meter for heating and cooling systems(*).
Complete with:
- electronic integrator with LCD display
- pair of immersion temperature probes;
- ultrasonic volume meter with pulse output;
- 2 pulse inputs for DHW and DCW.

Upgradable with configuration options to be ordered together (*).

Medium temperature range: 2–90 °C
Nominal pressure: PN 16
Accuracy class: 2
Probe/cable length: 1 m
Electric supply: 24 V AC
Running power consumption: 1 W
Protection class: IP 54
Communication protocol: M-Bus on RS485

CE 2014/32/UE (MI004)

Code	Connection	Permanent flow rate (Qp) (m^3/h)	Minimum flow rate (Qi) (l/h)		
750705G	1″M	2,5	10	1	-



7507K CONTECA® EASY ULTRA

Direct heat meter for heating and cooling systems (*).
Complete with:
- electronic integrator with LCD display;
- pair of immersion temperature probes;
- ultrasonic volume meter with pulse output;
- mounting brackets;
- pulse input for DCW.

Upgradable with configuration options to be ordered together (*).

Medium temperature range: 2–90 °C
Nominal pressure: PN 16
Accuracy class: 2
Probe/cable length: 1 m
Electric supply: 24 V AC
Running power consumption: 1 W
Protection class: IP 54
Communication protocol: M-Bus on RS485

CE 2014/32/UE (MI004)

Code	Connection	Permanent flow rate (Qp) (m^3/h)	Minimum flow rate (Qi) (l/h)		
750705K	1″M	2,5	10	1	-



7558

Cooling metering option.
The configuration option allows the upgrade on CONTECA EASY heat meters.

Code		
755810	1	-



7508

MODBUS-RTU transmission option.
The option allows to add the function to CONTECA EASY heat meter devices.
Max n. devices on Modbus network: 50
Communication parameters: 9600,8,N,1

Code		
750811	1	-

(*) Configuration options needs to be chosen when placing the order on heat meter in which they have to be enabled.

COMMUNICATION PROTOCOL CONVERTERS

Communication protocol converters



7550

BACnet/MODBUS-RTU converter for connection with BMS systems.
Pre-configured for communication with:
- CONTECA EASY heat meters and AQUAPRO EASY data acquisition devices (max. 35 devices).
- LEGIOMIX (max. 32 devices) and LEGIOMIX 2.0 (max. 25 devices) electronic mixing valves.
To be mounted on DIN rail.

Ambient temperature range: -20–70 °C
Electric supply: 12-24 V DC, 24 V AC
Running power consumption: 3 W

CE

Code	Notes		
755052		1	-



7550

M-Bus/RS-485 slave converter.
For CONTECA EASY heat meters and AQUAPRO EASY data acquisition devices.

Ambient temperature range: -10–60 °C
Electric supply: 230 V AC

CE

Code	Notes		
755058	M-Bus/RS-485 slave converter, max. 250 devices	1	-



755

M-Bus/RS-485 slave converter.
For CONTECA EASY heat meters and AQUAPRO EASY data acquisition devices.

Ambient temperature range: -10–60 °C

Code	Notes		
755158	M-Bus/RS-485 slave converter, max. 5 devices	1	-

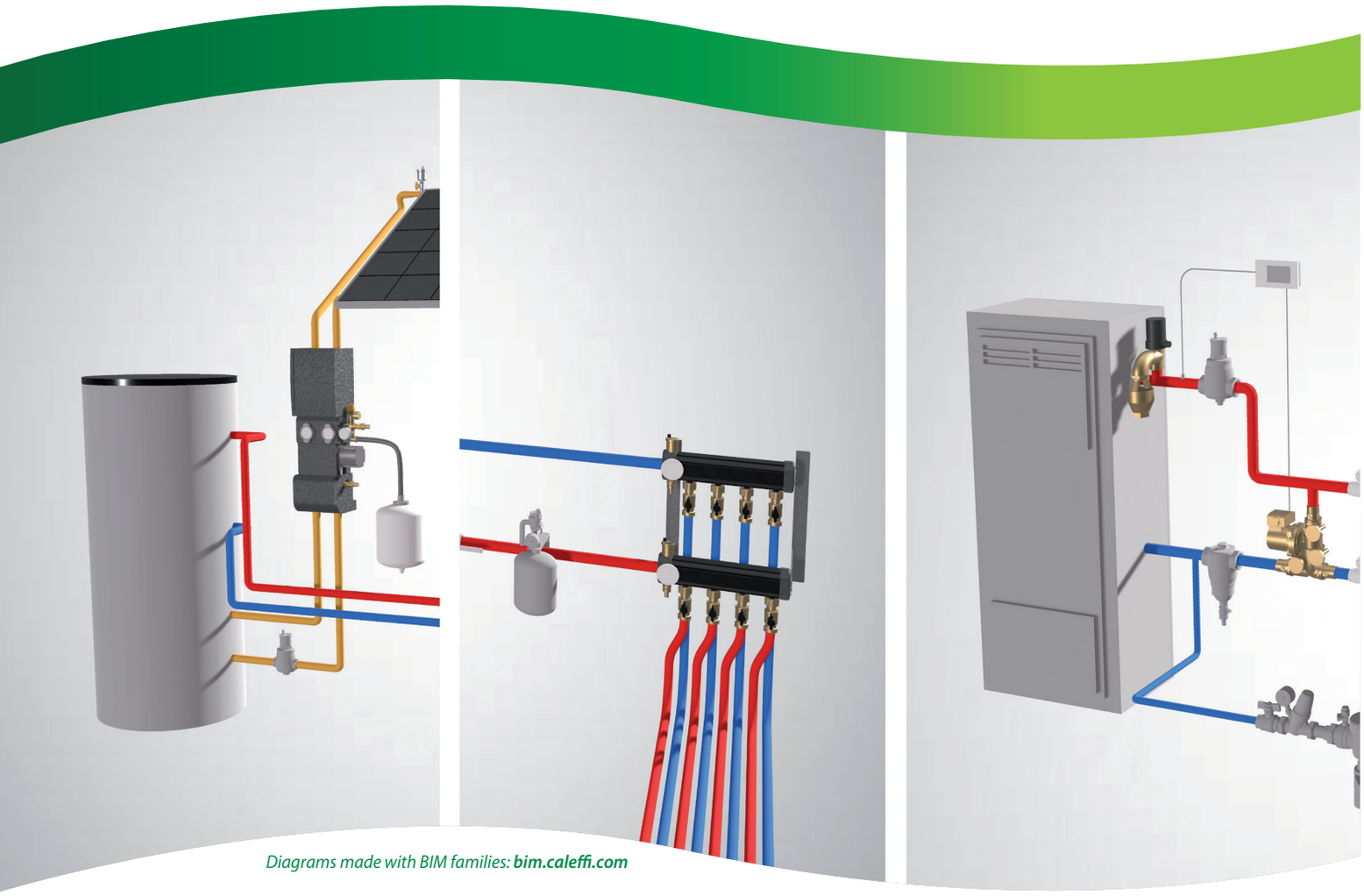

Diagrams made with BIM families: ***bim.caleffi.com***

Safety devices for solar thermal systems
Automatic air vents and deaerators for solar thermal systems
Pump stations for solar thermal systems
Spare parts for circulation units
Fittings for solar thermal systems
Direct heat meter
Shut-off and balancing valves for solar thermal systems
Zone/diverter valves
Motorised diverter valve for solar thermal systems
Thermostatic mixing valve for solar thermal systems
Solar storage-to-boiler connection kit
Geothermal manifold
Safety relief valves for biomass systems
Control devices for biomass systems

COMPONENTS FOR SOLAR THERMAL SYSTEMS

The CALEFFI SOLAR product range has been specifically developed for use in solar thermal systems, where high temperatures can normally be reached and where, depending on the kind of system, there can be glycol. Materials and performance of the components must necessarily take into account these particular operating conditions.

- Components for closed systems

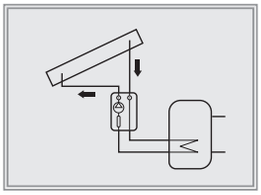

- Components for opened systems

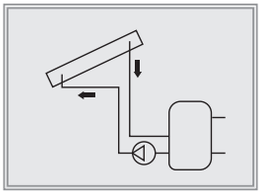

COMPONENTS FOR GEOTHERMAL SYSTEMS

The products in the CALEFFI GEO series have been specifically designed for use in heat pump systems. In ground source heat pumps a mixture of water and antifreeze fluid is generally used to protect against freezing temperatures.
The components are made with high-performance materials for this type of applications.

- Components for water-water heat pumps

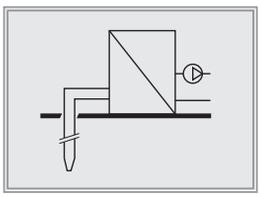

COMPONENTS FOR BIOMASS SYSTEMS

The CALEFFI BIOMASS® product series has been created specifically to be used in circuits of systems with wood solid fuel generators, operating at high temperature with water or glycol solutions as thermal medium. The materials of the components and their performance take account of the specific system needs in terms of efficiency and safety of the generators and systems.

- Safety and protection components

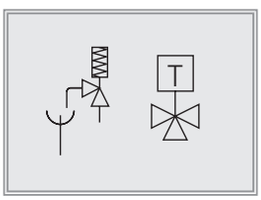

- Control units

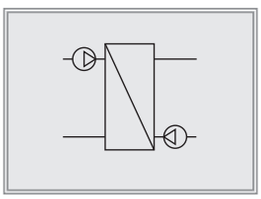

COMPONENTS FOR SOLAR THERMAL SYSTEMS

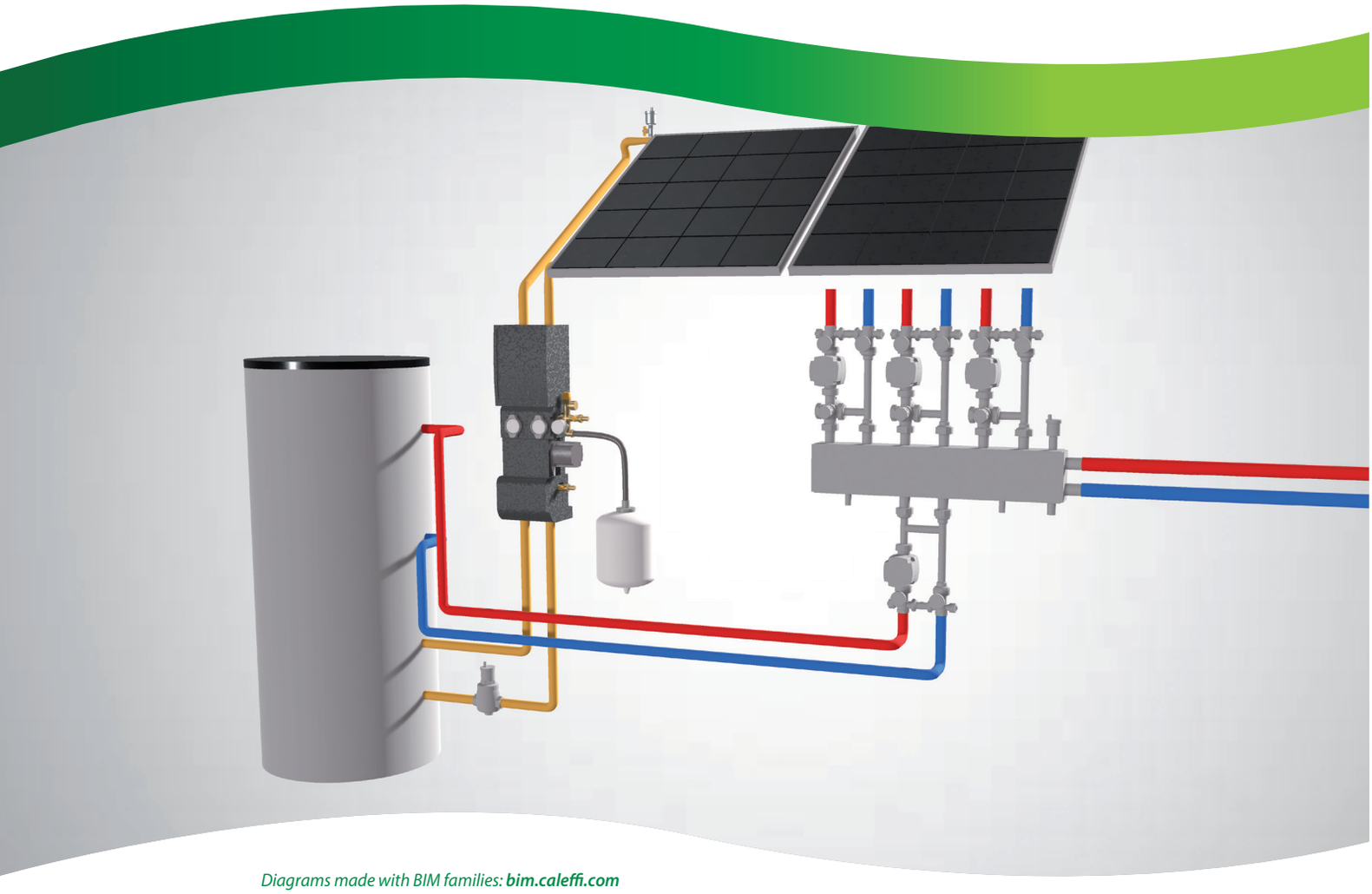

Diagrams made with BIM families: ***bim.caleffi.com***

Safety relief valves for solar thermal systems
Anti-freeze devices
Temperature and pressure relief valves for solar thermal systems
Automatic air vents for solar thermal systems
Deaerators for solar thermal systems
Manual air separator for solar thermal systems
Pump stations for solar thermal systems
Regulator for solar thermal systems
Expansion vessels for solar thermal systems
Accessories and spare parts for pump stations for solar thermal systems
Spare parts for circulation
Spare parts for circulation
Mechanical O-ring seal for solar thermal systems
Three-piece union fitting
Turbine heat meter for solar systems
Balancing valves for solar thermal systems
Shut-off valves for solar thermal systems
Zone/diverter ball valves (three-way)
Thermostatic diverter valves for solar thermal systems
Solar thermostatic mixing valve
Solar storage-to-boiler
Accessories and spare parts for connection kit

Domestic Water Sizer

DOMESTIC WATER SYSTEM SIZER ALSO FOR SMARTPHONE
Available on www.caleffi.com and app for smartphone.
Download the version for your iOS and Android® mobile phone.

SAFETY DEVICES FOR SOLAR THERMAL SYSTEMS

Safety relief valves for solar thermal systems



253

Safety relief valves for solar systems.

TÜV approved according to TRD 721 - SV 100 § 7.7.

Medium temperature range: -30–160 °C
Nominal pressure: PN 10
Finish: nickel plated
Maximum percentage of glycol: 50 %
Medium: water, glycol solutions
Material: brass

Code	Connection	Drain connection	Maximum discharge rating (kW)	Pressure setting (bar)		
253042	1/2″F	3/4″F	50	2,5	1	50
253043	1/2″F	3/4″F	50	3	1	50
253044	1/2″F	3/4″F	50	4	1	50
253046	1/2″F	3/4″F	50	6	1	50
253048	1/2″F	3/4″F	50	8	1	50
253040	1/2″F	3/4″F	50	10	1	50
253052	Rp 3/4″F	Rp 1″F	100	2,5	1	25
253053	Rp 3/4″F	Rp 1″F	100	3	1	25
253054	Rp 3/4″F	Rp 1″F	100	4	1	25
253056	Rp 3/4″F	Rp 1″F	100	6	1	25
253058	Rp 3/4″F	Rp 1″F	100	8	1	25
253050	Rp 3/4″F	Rp 1″F	100	10	1	25

Anti-freeze devices



603 ICECAL®

Anti-freeze safety device.
For solar thermal systems, to protect the hot water storage.
PATENT

Maximum working pressure: 10 bar
Ambient temperature range: -30–90 °C
Opening temperature: 3 °C
Closing temperature: 4 °C
Material: dezincification resistant brass DR

Code	Connection		
603040	1/2″F captive nut	1	50

Temperature and pressure relief valves for solar thermal systems



309

Temperature and pressure relief valve.
For solar thermal systems, to protect the hot water storage.
For solar thermal systems, to protect the hot water storage.
Certified to EN 1490 with settings: 7 - 10 bar.

Finish: chrome plated
Material: dezincification resistant brass DR
Temperature setting: 90 °C

Code	Connection	Drain connection	Maximum discharge rating (kW)	Pressure setting (bar)		
309461	1/2″M	Ø 15	10	6	1	20
309471	1/2″M	Ø 15	10	7	1	20
309401	1/2″M	Ø 15	10	10	1	20
309561	3/4″M	Ø 22	25	6	1	20
309571	3/4″M	Ø 22	25	7	1	20
309501	3/4″M	Ø 22	25	10	1	20

AUTOMATIC AIR VENTS AND DEAERATORS FOR SOLAR THERMAL SYSTEMS

Automatic air vents for solar thermal systems



250

Automatic air vent for solar thermal systems.
Complete with:
- automatic air vent for solar thermal systems;
- shut-off cock complete with seal.

Maximum working pressure: 10 bar
Maximum air discharge pressure: 5 bar
Medium temperature range: -30–180 °C
Maximum percentage of glycol: 50 %
Medium: water, glycol solutions
Material: brass
Finish: nickel plated

Code	Connection	Notes		
250031	3/8″M	without cock	1	25
250131	3/8″M	-	1	25
250041	1/2″M	without cock	1	25

The automatic air vent must be shut off after the system has been filled.





250

Shut-off cock.
Complete with seal.

Maximum working pressure: 10 bar
Medium temperature range: -30–200 °C
Maximum percentage of glycol: 50 %
Medium: water, glycol solutions
Material: brass
Finish: nickel plated

WRAS APPROVED PRODUCT CERTIFICATION MARK

Code	Connection 1	Connection 2	Notes		
250300	3/8″ M	3/8″ F	butterfly handle	1	10
250400	1/2″ M	1/2″ F	lever handle	1	10



250

Automatic air vent for solar thermal systems.
Complete with:
- automatic air vent for solar thermal systems;
- shut-off cock complete with seal.

Maximum working pressure: 10 bar
Maximum air discharge pressure: 2,5 bar
Medium temperature range: -30–180 °C
Maximum percentage of glycol: 50 %
Medium: water, glycol solutions
Material: brass
Finish: nickel plated

Code	Connection	Notes		
250831	3/8″ M	without cock	10	50
250931	3/8″ M	-	1	50



251 DISCALAIR®

High-performance automatic air vent for solar thermal systems.

Maximum working pressure: 10 bar
Maximum air discharge pressure: 10 bar
Medium temperature range: -30–160 °C
Maximum percentage of glycol: 50 %
Medium: glycol solutions
Material: brass
Finish: nickel plated

Code	Connection		
251004	1/2″ F	1	10

Deaerators for solar thermal systems



251 DISCAL®

Deaerator for solar thermal systems.

Maximum working pressure: 10 bar
Maximum air discharge pressure: 10 bar
Medium temperature range: -30–160 °C
Maximum percentage of glycol: 50 %
Medium: water, glycol solutions
Material: brass

Code	Connection		
251003	3/4″ F	1	10



251 DISCAL®

Deaerator for solar thermal systems.
With drain.

Maximum working pressure: 10 bar
Maximum air discharge pressure: 10 bar
Medium temperature range: -30–160 °C
Maximum percentage of glycol: 50 %
Medium: water, glycol solutions
Material: brass

Code	Connection		
251006	1″ F	1	-
251007	1 1/4″ F	1	-

Manual air separator for solar thermal systems



251

Manual air separator for solar thermal systems.

Maximum working pressure: 10 bar
Medium temperature range: -30–200 °C
Maximum percentage of glycol: 50 %
Medium: water, glycol solutions
Material: brass

Code	Connection		
251093	3/4″ F	1	10

Application diagram of DISCAL® 251 series

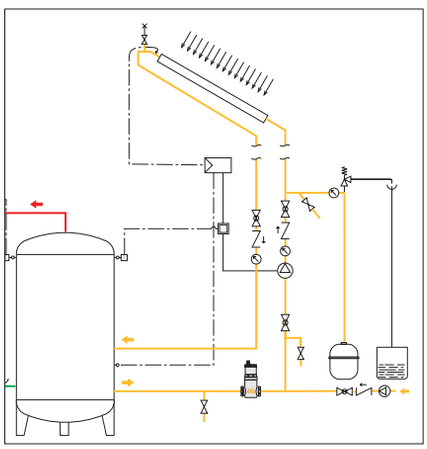

PUMP STATIONS FOR SOLAR THERMAL SYSTEMS

Pump stations for solar thermal systems

278

Pump station for solar thermal systems, return connection.
With PWM control.
Complete with:
- Solar circulation pump;
- 253 series safety relief valve for solar thermal systems;
- filler/drain cock;
- instrument holder fitting with pressure gauge;
- flow meter;
- return temperature gauge;
- shut-off and check valve;
- 2 hose connections.

With insulation.

Maximum working pressure: 10 bar
Medium temperature range: -10–110 °C
Medium: water, glycol solutions
Maximum percentage of glycol: 50 %
Type of pump: UPM3 15-75
Electric supply: 230 V AC



CE

Code	Connection	Notes	Flow meter scale (l/min)		
278050HE	3/4" F	with PWM control	1–13	1	-
278052HE	3/4" F	-	8–30	1	-

Can be combined with controller featuring PWM or ON/OFF control.

279

Pump station for solar thermal systems, flow and return connection.
With PWM control.
Complete with:
- Solar circulation pump;
- 253 series safety relief valve for solar thermal systems;
- filler/drain cock;
- instrument holder fitting with pressure gauge;
- flow meter;
- return temperature gauge;
- shut-off and check valve;
- 2 hose connections.

With insulation.

Maximum working pressure: 10 bar
Medium temperature range: -10–110 °C
Medium: glycol solutions, water
Maximum percentage of glycol: 50 %
Type of pump: UPM3 15-75
Electric supply: 230 V AC



CE

Code	Connection	Flow meter scale (l/min)		
279050HE	3/4" F	1–13	1	-
279052HE	3/4" F	8–30	1	-

Can be combined with controller featuring PWM or ON/OFF control.

255

Pump station for solar thermal systems, flow and return connection.
With PWM control.
Complete with:
- Grundfos Solar circulation pump with PWM control only;
- 253 series safety relief valve for solar thermal systems;
- 2 filler/drain cocks complete with hose connection;
- instrument holder fitting with pressure gauge;
- flow regulator with flow meter;
- air vent device;
- flow temperature gauge;
- return temperature gauge;
- 2 shut-off and check valves.

Can be combined with controller featuring PWM control.
(For other settings refer to 253).
With insulation.

Maximum working pressure: 10 bar
Medium temperature range: -30–120 °C
Medium: water, glycol solutions
Maximum percentage of glycol: 50 %
Type of pump: PML 25-145
Electric supply: 230 V AC

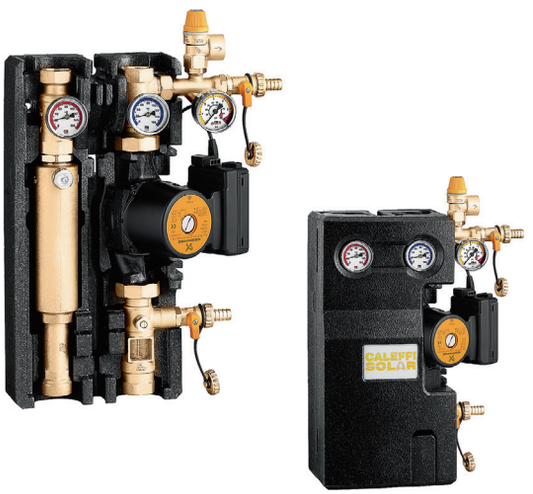

CE

Code	Connection	Flow meter scale (l/min)		
255266HE	1″F	5–40	1	-

Can be combined with controller featuring PWM control.

Regulator for solar thermal systems



278

Digital regulator DeltaSol SLL with PWM control.
Complete with 3 Pt1000 probes, with optional fourth probe.
Functions: differential temperature regulator with supplementary and optional functions.
Inlet: for 4 Pt1000 temperature probes.
Outputs: 3 semiconductor relays. 2 PWM.
With insulation.

Electric supply: 230 V AC

CE

Code		
278005	1	-



Cable with PWM connector.

Electric supply: 230 V AC
Supply cable length: 1 m

Code	Notes		
F29883		1	-



161

Pt1000 probe pocket, size 1/2″ M.

Code	Notes	Article use		
161014	L 100 mm	161010, 150006, 257006	1	-

Expansion vessels for solar thermal systems



259

Welded expansion vessel only for primary circuit of solar thermal systems, EC certification.
Bladder membrane.
Conforms to EN standard 13831.

Maximum working pressure: 10 bar
System working temperature range: -10–120 °C
Diaphragm temperature range: -10–70 °C
Medium: water, glycol solutions
Maximum percentage of glycol: 50 %

Pre-charge: 2,5 bar

CE 0045

Code	Connection	Volume (l)	
259008	3/4″ M	8	1
259012	3/4″ M	12	1
259018	3/4″ M	18	1
259025	3/4″ M	25	1
259033	3/4″ M	33	1



259

Welded expansion vessel only for primary circuit of solar thermal systems, EC certification.
Diaphragm membrane.
Conforms to EN standard 13831.

Maximum working pressure: 10 bar
System working temperature range: -10–120 °C
Diaphragm temperature range: -10–70 °C
Medium: water, glycol solutions
Maximum percentage of glycol: 50 %

Pre-charge: 2,5 bar

CE 0045

Code	Connection	Volume (l)	
259050	3/4″ M	50	1
259080	1″ M	80	1



5580

Ball shut-off valve for expansion vessels, **with drain cock. For solar thermal systems.**

Maximum working pressure: 6 bar
Medium temperature range: 5–120 °C
Medium: water, glycol solutions
Maximum percentage of glycol: 50 %

Code	Connection		
558052	3/4″ F	1	20
558062	1″ F	1	20

Accessories and spare parts for pump stations for solar thermal systems



255

Expansion vessel connection kit.
Complete with:
- stainless steel hose (L=610 mm);
- automatic shut-off cock;
- wall mounting bracket (for vessels up to 24 litres).

Maximum working pressure: 10 bar
Medium temperature range: -10–110 °C
Maximum percentage of glycol: 50 %
Medium: water, glycol solutions

Code	Connection		
255007	3/4″ F	1	-



255

System filling pump for pump stations 279, 278 and 255 series.
For 255, 256, 267, 266, 279 and 278 series circulation units.

Code		
255010	1	-



Accessory for circulation units in the 266, 267, 268, 269, 278 and 279 series.
For use during installation of 253 series 1/2″ valves.

Code	Notes		
F21224	adapter	1	-

SPARE PARTS FOR CIRCULATION UNITS

Spare parts for circulation units for 278-279 series



Spare pump UPM3 15-75 for 278HE and 279HE series, complete with cable.

Code	Type of pump		
F29885	UPM3 15-75	1	-

Spare parts for circulation units for 255 series



Spare pump UPML Solar 25-145 for 255266 unit.
May only be used in conjunction with controller featuring PWM control.

CE

Code	Notes		
F0000565	PML 25-145 pump, with PWM control only	1	-

FITTINGS FOR SOLAR THERMAL SYSTEMS

Mechanical O-ring seal for solar thermal systems



2540

Female fitting, mechanical O-Ring seal for solar thermal systems.
For annealed copper, hard copper, brass, mild steel and stainless steel pipes.
Black nickel-plated nut.

Maximum working pressure: 16 bar
Medium temperature range: -30–160 °C
Maximum percentage of glycol: 50 %
Medium: water, glycol solutions

Code	Connection	Pipe diameter		
254055	3/4″ F	Ø 15	1	25
254058	3/4″ F	Ø 18	1	25
254052	3/4″ F	Ø 22	1	25
254062	1″ F	Ø 22	1	25
254068	1″ F	Ø 28	1	10



2543

Coupling sleeve, mechanical O-Ring seal for solar thermal systems.
For annealed copper, hard copper, brass, mild steel and stainless steel pipes.
Black nickel-plated nut.

Maximum working pressure: 16 bar
Medium temperature range: -30–160 °C
Maximum percentage of glycol: 50 %
Medium: water, glycol solutions

Code	Pipe diameter		
254305	Ø 15	1	25
254308	Ø 18	1	25
254302	Ø 22	1	25



2544

Male fitting, mechanical O-Ring seal for solar thermal systems.
For annealed copper, hard copper, brass, mild steel and stainless steel pipes.
Black nickel-plated nut.

Maximum working pressure: 16 bar
Medium temperature range: -30–160 °C
Maximum percentage of glycol: 50 %
Medium: water, glycol solutions

Code	Connection	Pipe diameter		
254455	3/4″ M	Ø 15	1	25
254458	3/4″ M	Ø 18	1	25
254452	3/4″ M	Ø 22	1	25
254465	1″ M	Ø 15	1	25
254462	1″ M	Ø 22	1	25



2545

Elbow coupling sleeve, mechanical O-Ring seal for solar thermal systems.
For annealed copper, hard copper, brass, mild steel and stainless steel pipes.
Black nickel-plated nut.

Maximum working pressure: 16 bar
Medium temperature range: -30–160 °C
Maximum percentage of glycol: 50 %
Medium: water, glycol solutions

Code	Pipe diameter		
254505	Ø 15	1	25
254508	Ø 18	1	25
254502	Ø 22	1	25



2546

Elbow coupling sleeve, mechanical O-Ring seal for solar thermal systems.
For annealed copper, hard copper, brass, mild steel and stainless steel pipes.
Black nickel-plated nut.

Maximum working pressure: 16 bar
Medium temperature range: -30–160 °C
Maximum percentage of glycol: 50 %
Medium: water, glycol solutions

Code	Pipe diameter		
254602	Ø 22	1	20



2547

Male elbow fitting, mechanical O-Ring seal for solar thermal systems.
For annealed copper, hard copper, brass, mild steel and stainless steel pipes.
Black nickel-plated nut.

Maximum working pressure: 16 bar
Medium temperature range: -30–160 °C
Maximum percentage of glycol: 50 %
Medium: water, glycol solutions

Code	Connection	Pipe diameter		
254755	3/4″ M	Ø 15	1	25
254758	3/4″ M	Ø 18	1	25
254752	3/4″ M	Ø 22	1	25



2548

Female elbow fitting, mechanical O-Ring seal for solar thermal systems.
For annealed copper, hard copper, brass, mild steel and stainless steel pipes.
Black nickel-plated nut.

Maximum working pressure: 16 bar
Medium temperature range: -30–160 °C
Maximum percentage of glycol: 50 %
Medium: water, glycol solutions

Code	Connection	Pipe diameter		
254855	3/4″ F	Ø 15	1	25
254858	3/4″ F	Ø 18	1	25
254852	3/4″ F	Ø 22	1	25



2540

Plug for Ø 22 copper pipe.

Code	Pipe diameter		
254002	Ø 22	1	25

Three-piece union fitting



588

Three-piece union fitting for solar thermal systems.
Black nickel-plated nut.

Maximum working pressure: 16 bar
Medium temperature range: -30–160 °C
Maximum percentage of glycol: 50 %
Medium: water, glycol solutions

Code	Connection 1	Connection 2		
588052	3/4″ F	3/4″ M	1	25
588062	1″ F	1″ M	1	20

DIRECT HEAT METER

Turbine heat meter for solar systems

75025
CONTECA® EASY SOLAR

Compact direct heat meter for heating solar systems.
The metering module is supplied complete with:
- pair of temperature probes with immersion pockets;
- Y pockets for immersion probes;
- electronic integrator with LCD display.

Local reading via LCD display/centralised reading via BUS transmission.

Medium temperature range: 5–120 °C
Nominal pressure: PN 16
Accuracy class: 3
Maximum percentage of glycol: 50 %
Probe/cable length: 1,9 m
Electric supply: 24 V AC/DC
Running power consumption: 1 W
Protection class: IP 54
Communication protocol: M-Bus on RS485



CE 2014/32/UE (MI004)

Code	Connection	Nominal flow rate (m^3/h)	Minimum flow rate (Qi) (l/h)	Measure type		
750254	1/2″ M	1,5	30	single nozzle	1	-
750255	3/4″ M	2,5	50	single nozzle	1	-
750256	1″ M	3,5	70	multi-nozzle	1	-
750257	1 1/4″ M	6	120	multi-nozzle	1	-
750258	1 1/2″ M	10	200	multi-nozzle	1	-
750259	2″ M	15	300	multi-nozzle	1	-

SHUT-OFF AND BALANCING VALVES FOR SOLAR THERMAL SYSTEMS

Balancing valves for solar thermal systems



258

Balancing valve with flow meter, for solar thermal systems.
Direct reading of flow rate.
Ball valve for flow rate adjustment.
Graduated scale flow meter with magnetic movement flow rate indicator.
With insulation.
PATENT

Maximum working pressure: 10 bar
Medium temperature range: -30–130 °C
Maximum percentage of glycol: 50 %
Medium: glycol solutions, water

Material: brass

Code	Connection	Flow rate regulation		
258503	3/4″ F		1	5
258523	3/4″ F		1	5
258533	3/4″ F		1	5
258603	1″ F		1	5

Shut-off valves for solar thermal systems



240

Ball valve for solar thermal system, AISI 304 stainless steel.
AISI 304 stainless steel basket.

Medium temperature range: -30–200 °C
Nominal pressure: PN 63
Maximum percentage of glycol: 50 %
Medium: glycol solutions, water
Material: stainless steel

Code	Connection		
240400	1/2″ F	1	5
240500	3/4″ F	1	5
240600	1″ F	1	5

Application diagram of heat meter 75025 series and balancing valve 258 series

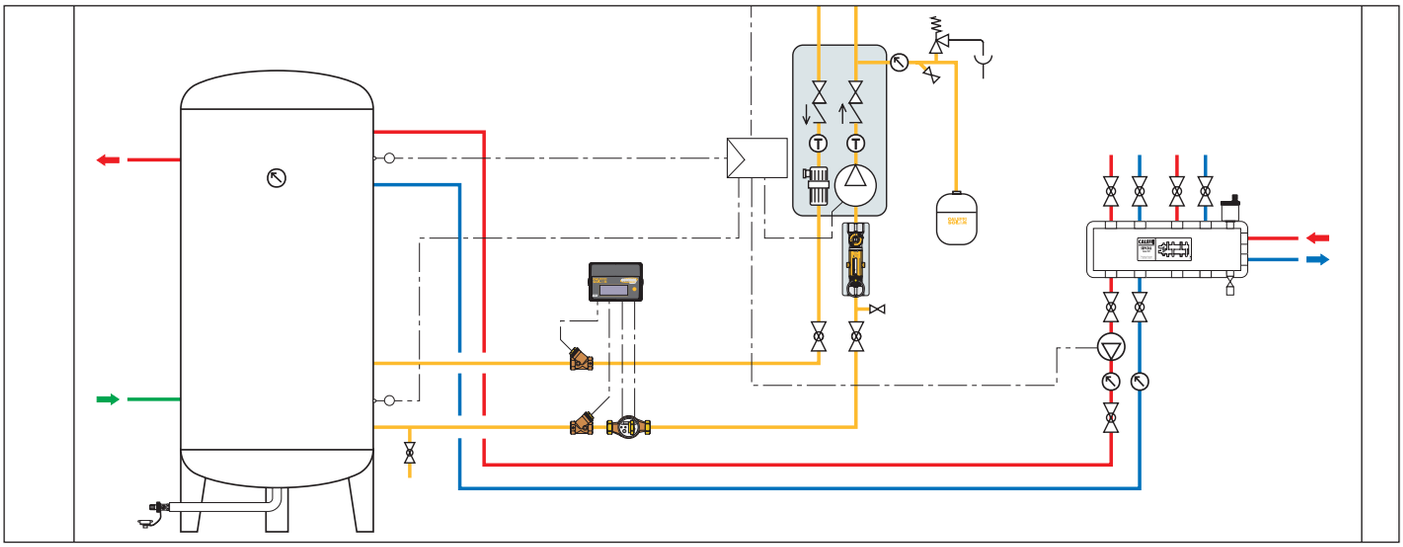

ZONE/DIVERTER VALVES

Zone/diverter ball valves (three-way)



6443

Motorised three-way ball diverter valve.
Complete with **three-point control** actuator.
With auxiliary microswitch.
Maximum working pressure: 10 bar
Medium temperature range: -5–110 °C
Ambient temperature range: 0–55 °C

Protection class: IP 54
Supply cable length: 1 m
Auxiliary microswitch contact rating (230 V): 0,8 A
Opening-Closing time: 10 s (90° rot.)

Code	Connection	Electric supply	Kv (m^3/h)		
644346	1/2″ M	230 V AC	3,9	1	5
644356	3/4″ M	230 V AC	3,9	1	5
644357	3/4″ M	230 V AC	8,6	1	5
644366	1″ M	230 V AC	9,0	1	5
644348	1/2″ M	24 V AC	3,9	1	5
644358	3/4″ M	24 V AC	3,9	1	5
644359	3/4″ M	24 V AC	8,6	1	5
644368	1″ M	24 V AC	9,0	1	5

MOTORISED DIVERTER VALVE FOR SOLAR THERMAL SYSTEMS

Thermostatic diverter valves for solar thermal systems



2620

Thermostatic diverter valve for solar thermal systems.

Medium temperature range: 2–100 °C
Maximum working pressure: 10 bar
Material: dezincification resistant brass DR

Code	Connection	Adjustment temperature (°C)	Kv (m^3/h)		
262040	1/2″ M	35–55	1,5	1	10
262050	3/4″ M	35–55	1,7	1	10



2620

Thermostatic diverter valve for solar thermal systems.

Maximum working pressure: 10 bar
Medium temperature range: 2–100 °C
Temperature setting: 45 °C
Material: dezincification resistant brass DR
Finish: nickel plated

Code	Connection	Adjustment temperature (°C)	Kv (m^3/h)		
262060	1″ M	38–52	2,6	1	5

Application diagram of thermostatic mixing valve 2521 series

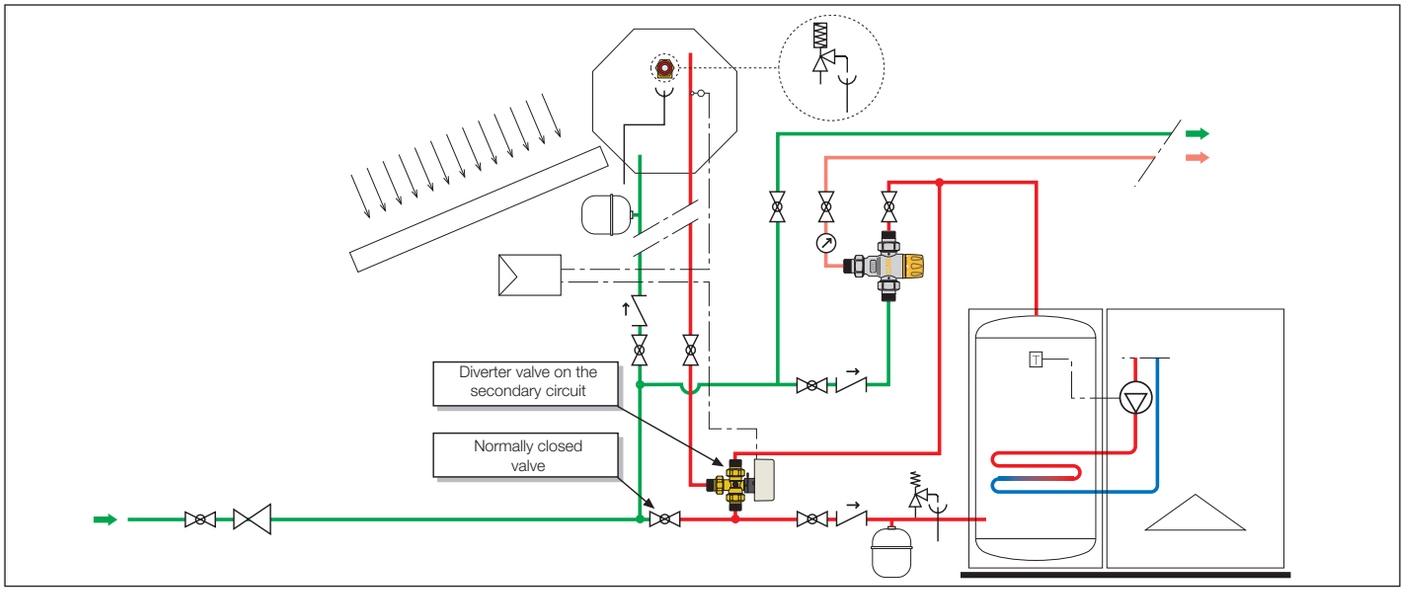

THERMOSTATIC MIXING VALVE FOR SOLAR THERMAL SYSTEMS

Solar thermostatic mixing valve for domestic applications



2521

Adjustable thermostatic mixing valve for solar thermal systems.

Maximum working pressure: 14 bar
Medium temperature range: 2–100 °C
Material: dezincification resistant brass DR "low lead"
Finish: nickel plated

Code	Connection	Notes	Adjustment temperature (°C)	Kv (m^3/h)		
252140	1/2″ M	-	30–65	2,6	1	10
252150	3/4″ M	-	30–65	2,6	1	10
252153	3/4″ M	with check valves	30–65	2,6	1	10



2521 NEW

Adjustable thermostatic mixing valve for solar thermal systems.

Maximum working pressure: 14 bar
Medium temperature range: 2–100 °C
Material: dezincification resistant brass DR "low lead"
Finish: yellow brass

Code	Connection	Notes	Adjustment temperature (°C)	Kv (m^3/h)		
252142	1/2″ M	-	30–65	2,6	1	10
252152	3/4″ M	-	30–65	2,6	1	10
252155	3/4″ M	with check valves	30–65	2,6	1	10



2527

Adjustable anti-scald thermostatic mixing valve, for solar thermal systems.
With check valves and strainers.
High thermal performance device **with anti-scald safety function**.
Performance to standards NF 079 doc. 8, EN 15092, EN 1111, EN 1287.

Maximum working pressure: 10 bar
Medium temperature range: 2–100 °C
Material: brass

Code	Connection	Adjustment temperature (°C)	Kv (m^3/h)		
252714	1/2″ M	35–55	1,5	1	10
252713	3/4″ M	35–55	1,7	1	10



2522

High performance adjustable anti-scald tempering valve **with check valves and strainers at the inlets**.
Suitable for solar and instantaneous hot water systems.
Certification AS 4032.1.
Maximum working pressure: 14 bar
Medium temperature range: 2–100 °C
Material: dezincification resistant brass DR "low lead"

Code	Connection	Adjustment temperature (°C)	DN	Kv (m^3/h)		
252212HP AUS	1/2″ M	35–55	DN 15	1,5	1	10
252219HP AUS	3/4″ M	30–50	DN 20	1,7	1	5

Solar thermostatic mixing valve for commercial applications



2521

Thermostatic mixing valve for centralised solar thermal systems.
Composite anti-scale internal regulator.

Maximum working pressure: 14 bar
Medium temperature range: 2–100 °C
Material: dezincification resistant brass DR

Code	Connection	Adjustment temperature (°C)	Kv (m^3/h)		
252151	3/4″ M	35–65	4,5	1	-
252160	1″ M	35–65	5,5	1	-
252170	1 1/4″ M	35–65	7,6	1	-
252180	1 1/2″ M	35–65	11,0	1	-
252190	2″ M	35–65	13,3	1	-



2523

Thermostatic mixing valve with interchangeable cartridge for solar thermal systems.

Maximum working pressure: 14 bar
Medium temperature range: 2–110 °C
Material: brass

Code	Connection	Adjustment temperature (°C)	Kv (m^3/h)		
252340	1/2″ M	30–65	4,0	1	-
252350	3/4″ M	30–65	4,5	1	-
252360	1″ M	30–65	6,9	1	-
252370	1 1/4″ M	30–65	9,1	1	-
252380	1 1/2″ M	35–65	14,5	1	-
252390	2″ M	35–65	19,0	1	-

Solar thermostatic mixing valve for point of use

2522

Adjustable thermostatic mixing valve **with check valves and strainers**, for solar thermal systems.
Enhanced thermal performance device **with anti-scald safety function**.
With override function for thermal disinfection.
Certification AS 4032.1.

Maximum working pressure: 14 bar
Medium temperature range: 2–100 °C
Material: dezincification resistant brass DR "low lead"



Code	Connection	Notes	DN	Adjustment temperature (°C)	Kv (m^3/h)		
252212TMF AUS	1/2" M	without union	DN 15	30–50	1,3	1	10
252219TMF AUS	3/4" M	-	DN 20	30–50	1,7	1	6



2522

Adjustable thermostatic mixing valve with check valves and strainers, for solar thermal systems.
Enhanced thermal performance device with anti-scald safety function.
Certification AS 4032.1.

Maximum working pressure: 14 bar
Medium temperature range: 2–100 °C
Material: dezincification resistant brass DR "low lead"

Code	Connection	DN	Adjustment temperature (°C)	Kv (m^3/h)		
25225TM AUS	1" M	DN 25	30–50	3	1	5

SOLAR STORAGE-TO-BOILER CONNECTION KIT

Solar storage-to-boiler motorised connection kit

264 SOLARNOCAL

Solar storage-to-boiler connection kit, **without thermal integration**.
Three-contact type actuator.
Complete with:
- anti-scald thermostatic mixing valve with knob, for solar systems;
- inlet strainers and check valves;
- diverter valve with three-contact actuator and auxiliary microswitch;
- thermostat with probe to actuate diverter valves in solar systems;
- temperature display;
- protective pre-formed shell cover. Mixing valve-valve coupling with adjustable inlet and outlet connection positions.

With auxiliary microswitch.

Maximum working pressure: 10 bar
Medium temperature range: 5–110 °C
Adjustment temperature range: 35–55 °C
Electric supply: 230 V AC
Material: dezincification resistant brass DR



Code	Connection		
264352	3/4" M	1	-

265 SOLARINCAL

Solar storage-to-boiler connection kit, with thermal integration.
Complete with:
- anti-scald thermostatic mixing valve with knob, for solar systems;
- inlet strainers and check valves;
- diverter valve with three-contact actuator and auxiliary microswitch;
- thermostat with probe to actuate diverter valves in solar systems;
- temperature display;
- protective pre-formed shell cover.
- Mixing valve-valve coupling with adjustable inlet and outlet connection positions.

With auxiliary microswitch.

Maximum working pressure: 10 bar
Medium temperature range: 5–110 °C
Adjustment temperature range: 35–55 °C
Electric supply: 230 V AC
Material: dezincification resistant brass DR



Code	Connection		
265352	3/4" M	1	-

265

265 series kit without thermostat and probe.



Code	Connection	Article use		
265359	3/4" M	265352	1	-

Application diagram of SOLARNOCAL kit 264 series

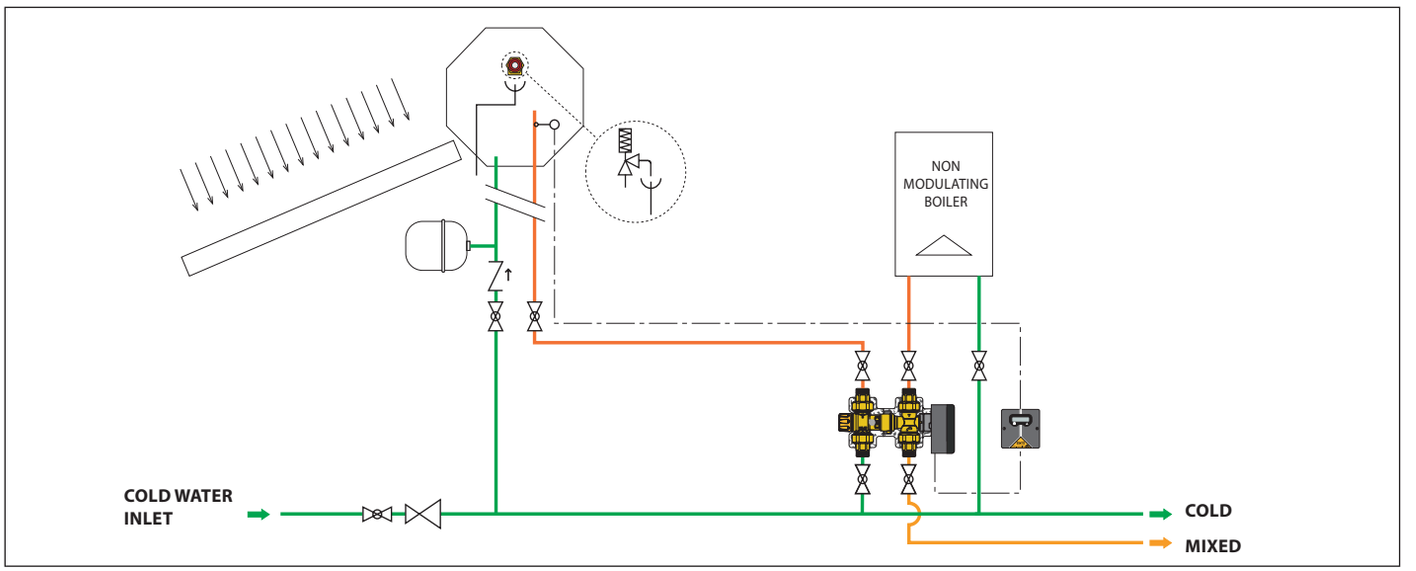

Application diagram of SOLARINCAL kit 265 series

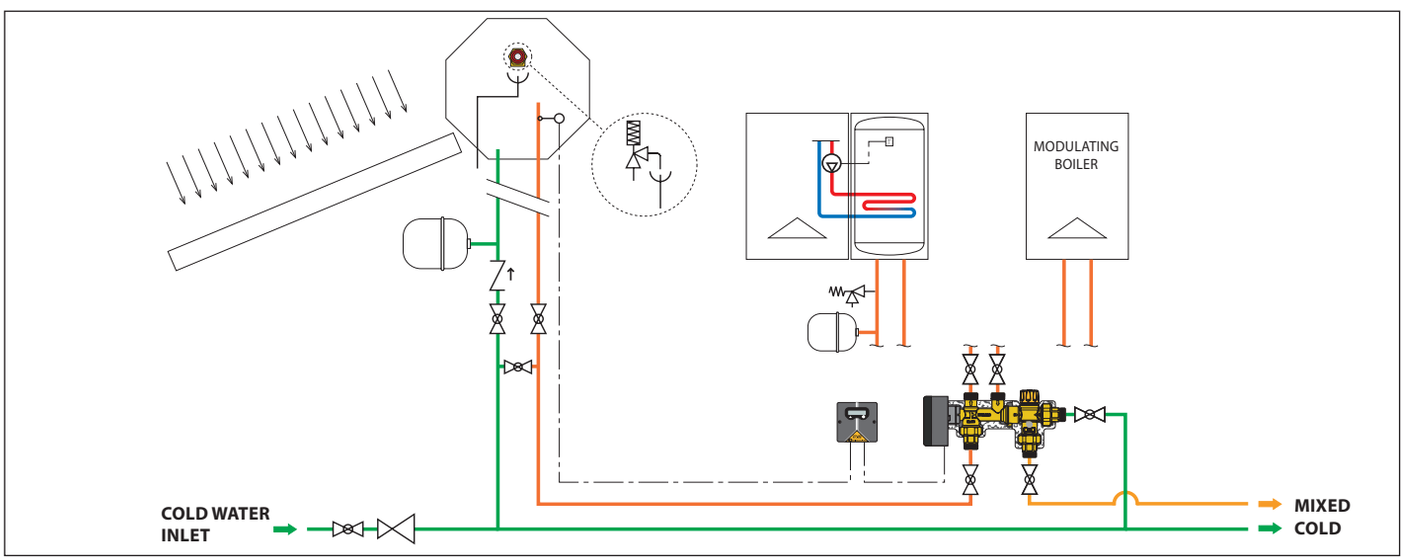

Application diagram of SOLARINCAL kit 265 series with recirculation system

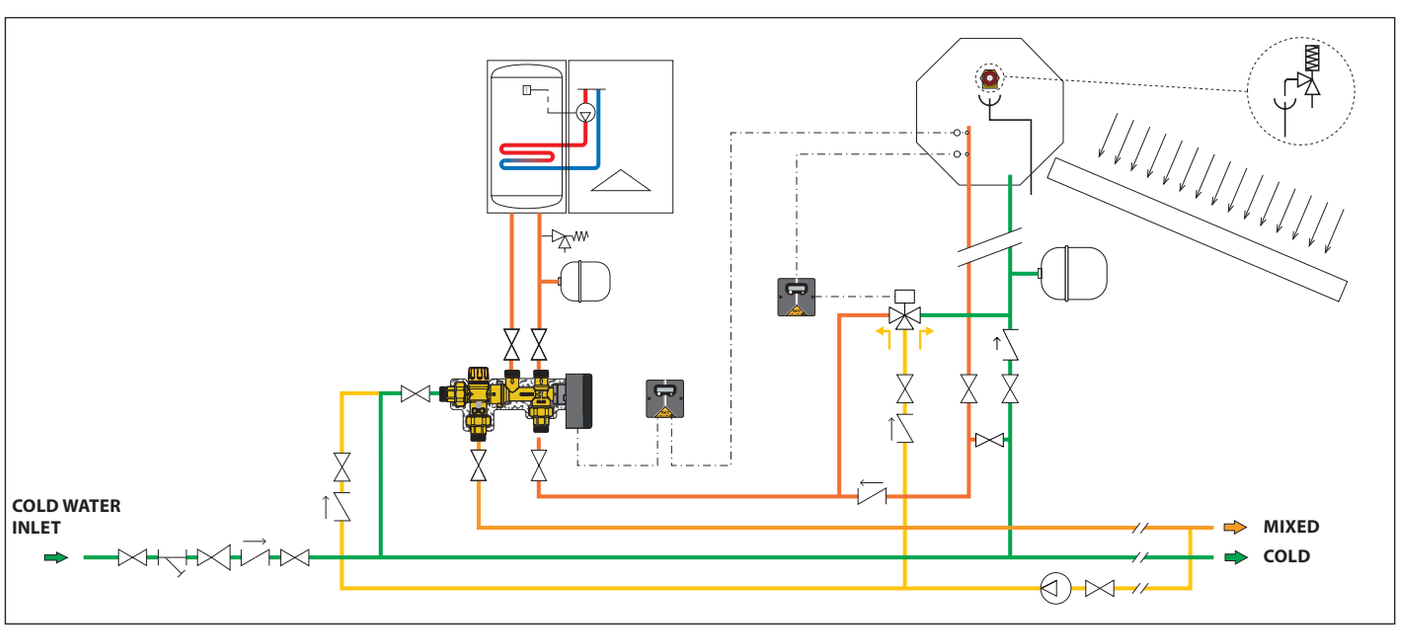

Solar storage-to-boiler thermostatic connection kit



262 SOLARINCAL-T

Solar storage-to-boiler connection kit, with thermal integration.
Complete with:
- anti-scald thermostatic mixing valve with knob, for solar systems;
- inlet check valve;
- thermostatic diverter valve;
- thermostatic control device;
- protective pre-formed shell cover.

Performance according to the NF 079 doc. 8, EN 15092, EN 1111, EN 1287.

Maximum working pressure: 10 bar
Medium temperature range: 2–100 °C
Adjustment temperature range: 35–55 °C
Diverting valve set: 45 °C
Material: dezincification resistant brass DR

Code	Connection		
262350	3/4" M	1	-



263 SOLARINCAL-T PLUS

Solar storage-to-boiler connection kit, with thermal integration.
Complete with:
- anti-scald thermostatic mixing valve with knob, for solar systems;
- inlet check valve;
- thermostatic diverter valve;
- thermostatic control device;
- protective pre-formed shell cover.

Performance according to the NF 079 doc. 8, EN 15092, EN 1111, EN 1287.
PATENT

Maximum working pressure: 10 bar
Medium temperature range: 2–100 °C
Adjustment temperature range: 35–55 °C
Diverting valve set: 45 °C
Material: dezincification resistant brass DR

Code	Connection		
263350	3/4" M	1	-

Application diagram of kit SOLARINCAL-T kit 262 series

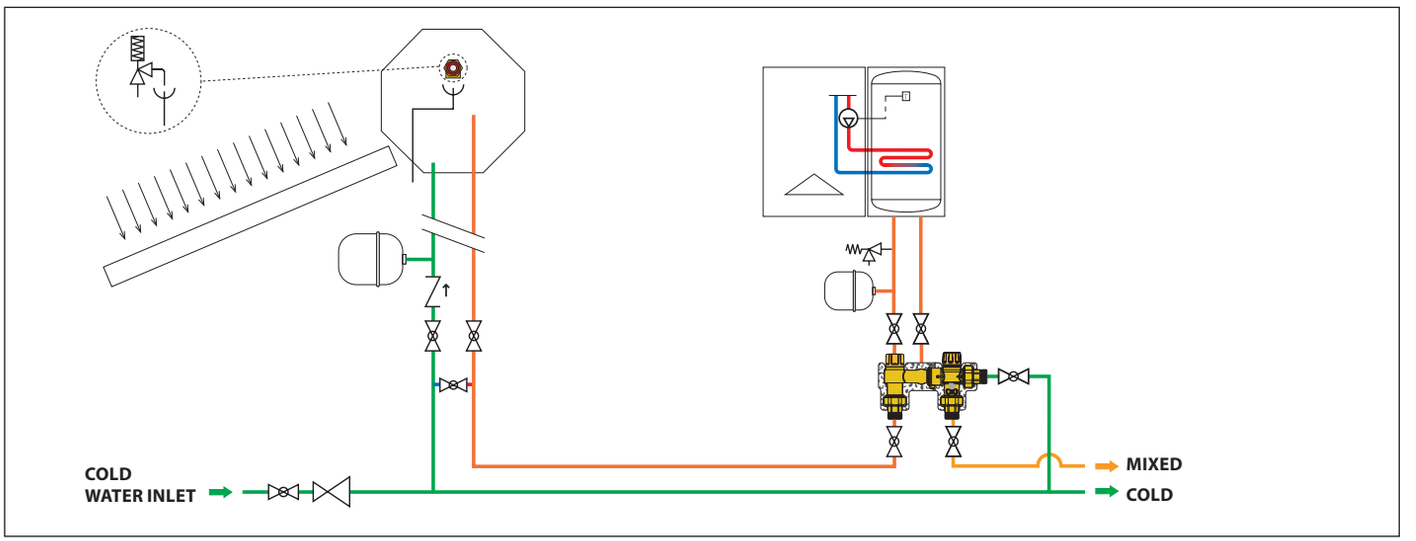

Application diagram of kit SOLARINCAL-T PLUS kit 263 series

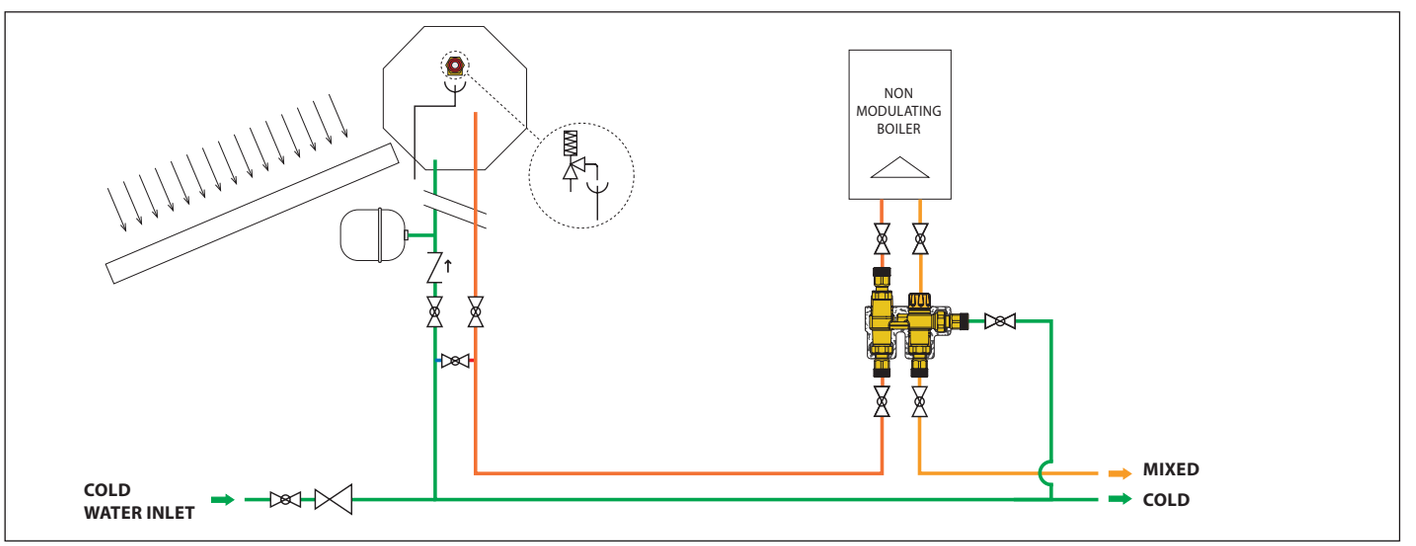

Application diagram of kit SOLARINCAL-T PLUS with recirculation system

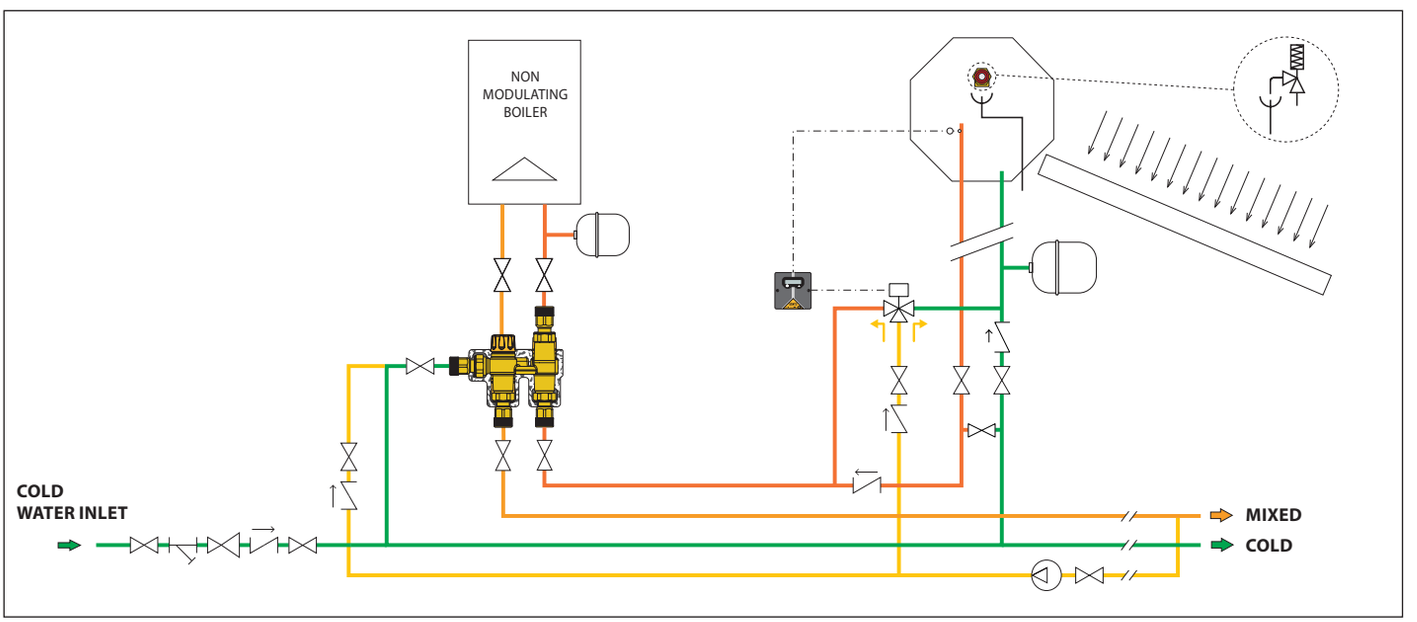

COMPONENTS FOR GEOTHERMAL SYSTEMS

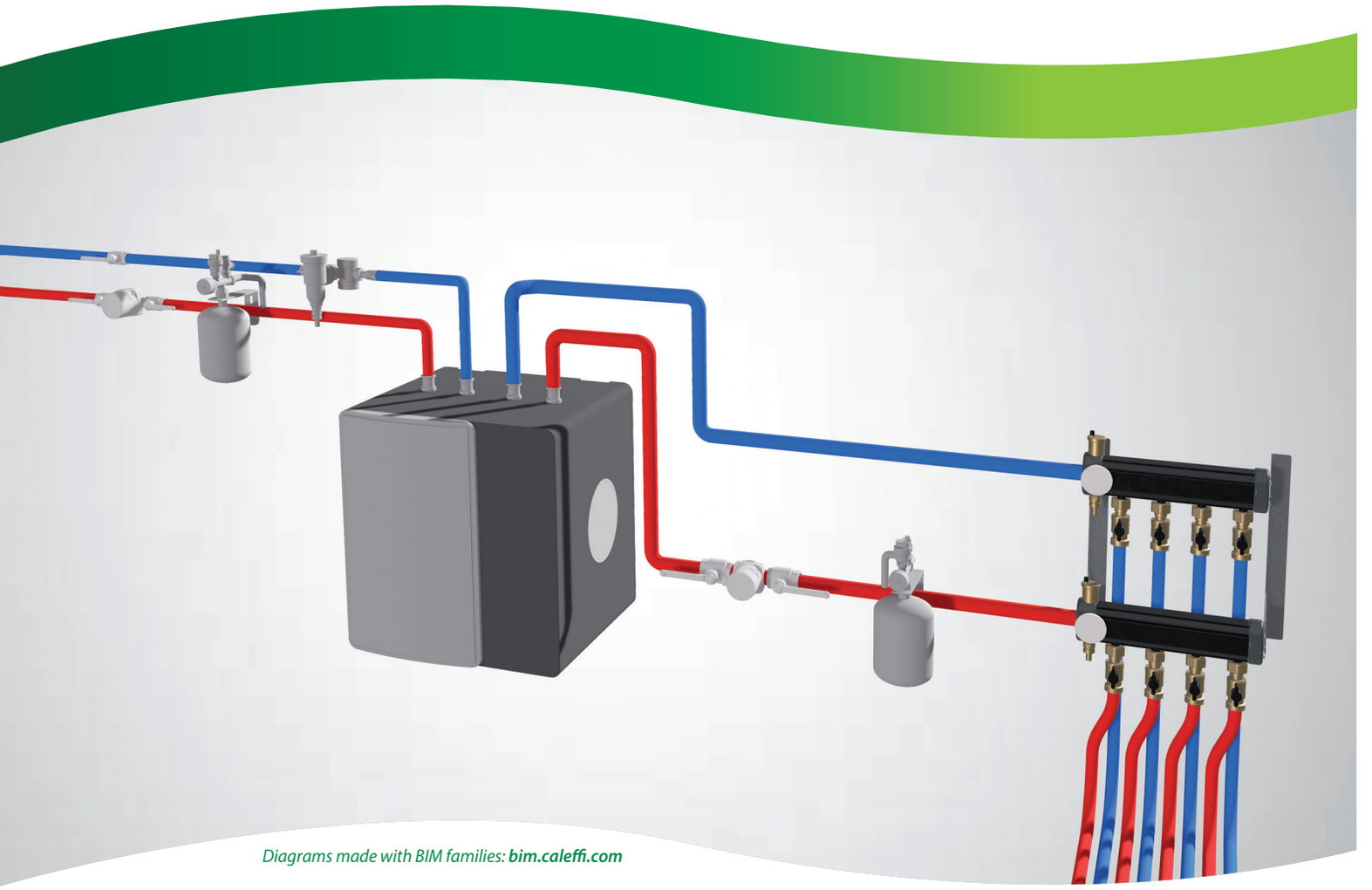

Diagrams made with BIM families: ***bim.caleffi.com***

Preassembled geothermal manifold
Geothermal modular manifold
Shut-off and balancing valves for geothermal manifold
Accessories for geothermal manifold

GEOTHERMAL MANIFOLD

Preassembled geothermal manifold

110

Preassembled geothermal manifold.
Complete with:
- automatic air vent;
- Ø80 mm temperature gauges;
- filler/drain cocks;
- composite flow and return manifolds;
- end fitting caps with insulation;
- stainless steel wall mounting brackets;
- set of flow direction and circuit identification labels;
- wall anchors.

Outlet connections with mechanical seal for 112 series balancing valves and 871 series ball valves.

Maximum working pressure: 6 bar
Maximum hydraulic test pressure: 10 bar
Medium temperature range: -10–60 °C
Ambient temperature range: -20–60 °C
Maximum percentage of glycol: 50 %
Medium: water, glycol solutions, saline solutions
Maximum recommended flow rate: 7 m^3/h
DN: DN 50

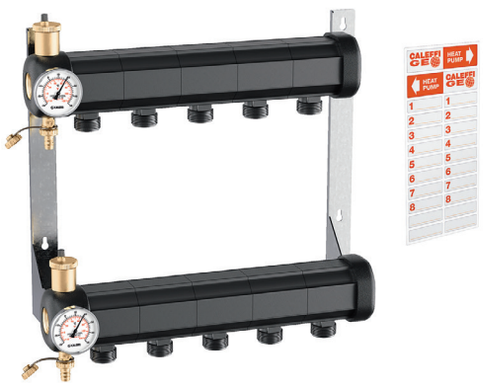

Code	Connection	Outlet connection		
1107B5	1 1/4" F	42 p. 2,5 TR - 2 out.	1	-
1107C5	1 1/4" F	42 p. 2,5 TR - 3 out.	1	-
1107D5	1 1/4" F	42 p. 2,5 TR - 4 out.	1	-
1107E5	1 1/4" F	42 p. 2,5 TR - 5 out.	1	-
1107F5	1 1/4" F	42 p. 2,5 TR - 6 out.	1	-
1107G5	1 1/4" F	42 p. 2,5 TR - 7 out.	1	-
1107H5	1 1/4" F	42 p. 2,5 TR - 8 out.	1	-

For more than 8 outlet circuits, see the modular manifold.

Geothermal modular manifold



110

Modular manifold single module in polymer.
Outlet connections with mechanical seal for 112 series balancing valves and 871 series ball valves.

Maximum working pressure: 6 bar
Maximum hydraulic test pressure: 10 bar
Medium temperature range: -10–60 °C
Ambient temperature range: -20–60 °C
Maximum percentage of glycol: 50 %
Medium: water, glycol solutions, saline solutions
DN: DN 50

Code	Outlet connection		
110700	42 p. 2,5 TR - 1 out.	1	-



110

Stainless steel tie-rods for assembling modular manifolds.
M8 threaded stainless steel bar.

Code	Notes		
110012	for manifold with 2 circuits	1	-
110013	for manifold with 3 circuits	1	-
110014	for manifold with 4 circuits	1	-
110015	for manifold with 5 circuits	1	-
110016	for manifold with 6 circuits	1	-
110017	for manifold with 7 circuits	1	-
110018	for manifold with 8 circuits	1	-
110019	for manifold with 9 circuits	1	-
110020	for manifold with 10 circuits	1	-
110021	for manifold with 11 circuits	1	-
110022	for manifold with 12 circuits	1	-

110

Assembly kit for modular manifolds.
Complete with:
- brass end fitting with automatic air vent, filler/drain cock;
- brass head plug;
- pre-formed shell insulation;
- screws and bolts for rods and bracketing;
- set of flow direction and circuit identification labels;
- temperature gauge with pocket (-30–50 °C);
- 2 seal gaskets

Maximum working pressure: 6 bar
Maximum hydraulic test pressure: 10 bar
Medium temperature range: -10–60 °C
Ambient temperature range: -20–60 °C
Maximum percentage of glycol: 50 %
Medium: water, glycol solutions, saline solutions



Code	Connection		
110750	1 1/4" F	1	-



110

Pair of stainless steel brackets to secure modular manifolds.
Complete with screws and wall anchors.
Rapid wall coupling system.
System for rapidly coupling the manifold on the brackets.

Code		
110001	1	-

Shut-off and balancing valves for geothermal manifold



112

Balancing valve with flow meter.
Complete with fitting for polyethylene pipe.
Direct reading of flow rate.
Ball valve for flow rate adjustment.
Graduated scale flow meter with magnetic movement flow rate indicator.

Maximum working pressure: 10 bar
Medium temperature range: -10–40 °C
Ambient temperature range: -20–60 °C
Flow rate regulation range: 0,3–1,2 m^3/h
Medium: saline solutions, water, glycol solutions
Maximum percentage of glycol: 50 %
Material: brass

Code	Manifold connection	Pipe connection		
112621	42 p. 2,5 TR captive nut	Ø 25	1	-
112631	42 p. 2,5 TR captive nut	Ø 32	1	-
112641	42 p. 2,5 TR captive nut	Ø 40	1	-

Accessories for geothermal manifold



112

Insulation for balancing valves.
Reaction to fire (DIN 4102): class B2.

Medium temperature range: 0–100 °C
Thickness: 10 mm

Code	Notes	Article use		
112001	Ø 25 - Ø 32	112621, 112631	1	-
112003	Ø 40	112641	1	-



871

Ball valve complete with fitting for polyethylene pipe.

Maximum working pressure: 16 bar
Medium temperature range: -10–40 °C
Ambient temperature range: -20–60 °C
Maximum percentage of glycol: 50 %
Medium: water, glycol solutions, saline solutions
Material: brass

Code	Manifold connection	Pipe connection		
871025	42 p. 2,5 TR captive nut	Ø 25	1	-
871032	42 p. 2,5 TR captive nut	Ø 32	1	-
871040	42 p. 2,5 TR captive nut	Ø 40	1	-



110

Union.
Complete with gasket.

Maximum working pressure: 16 bar
Medium temperature range: 0–40 °C

Code	Manifold connection	Pipe connection		
110050	42 p. 2,5 TR	3/4" M	1	20
110060	42 p. 2,5 TR	1" M	1	20

COMPONENTS FOR BIOMASS SYSTEMS

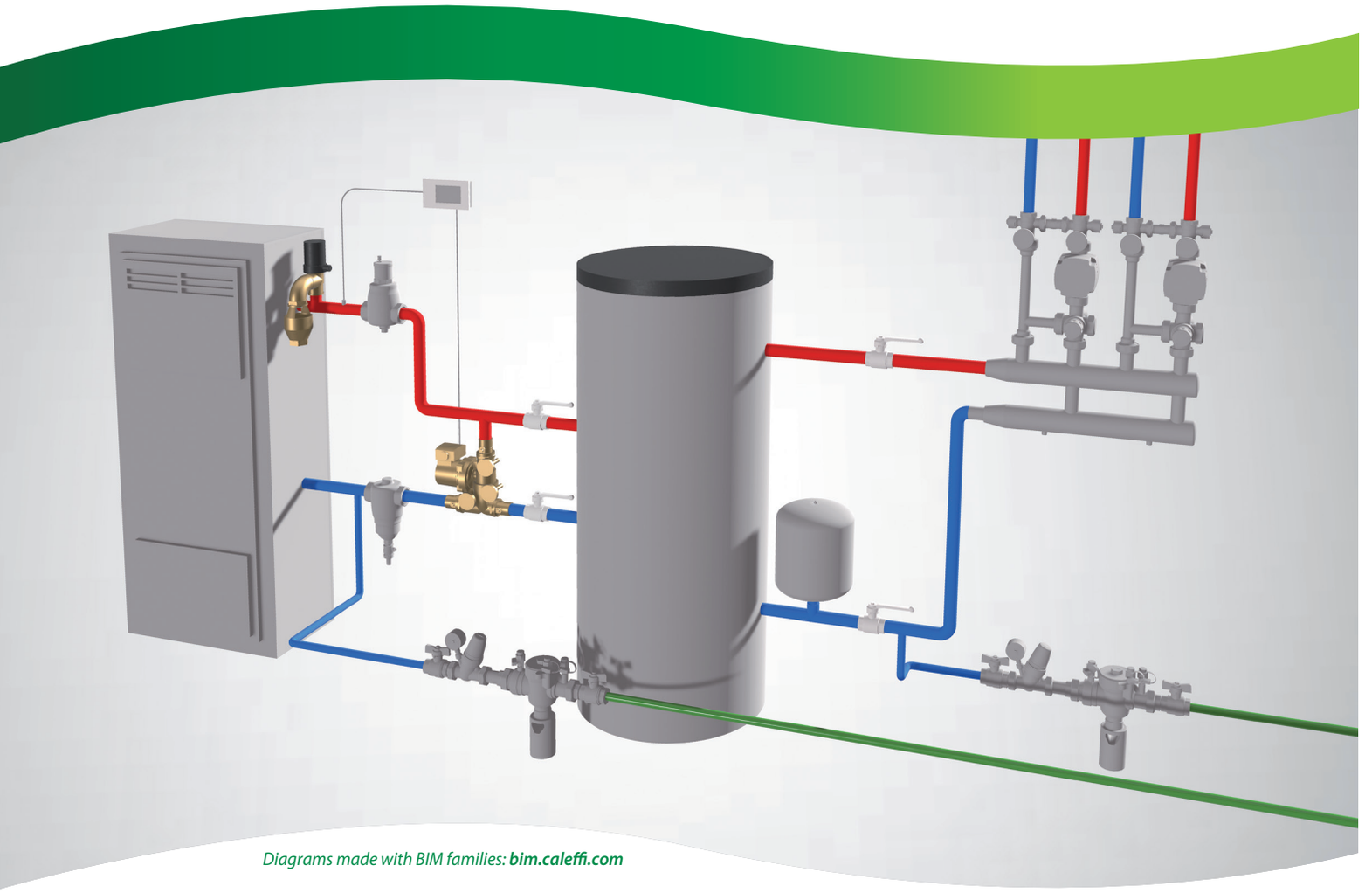

Diagrams made with BIM families: ***bim.caleffi.com***

Temperature safety relief valves
Temperature relief valves with automatic filling
Draught regulating valve
Anti-condensation valve
Anti-condensation recirculation and distribution unit

CALEFFI BIOMASS

SAFETY RELIEF VALVES FOR BIOMASS SYSTEMS

Temperature safety relief valves



543

Temperature safety relief valve, with double safety sensor.
For solid fuel generators.
Certified to EN 14597.

Maximum working pressure: 10 bar
Medium temperature range: 5–110 °C
Capillary length: 1,3 m
Discharge flow rate with △p=1 bar and T= 110 °C: 3000 l/h

Code	Connection	Temperature setting (°C)		
543513	3/4″ F	98	1	10



542

Temperature relief valve, with fail-safe action.
Manual reset for burner switch off or alarm activation.
Discharge rating 1 1/2″ x 1 1/4″ - 136kW; 1 1/2″ x 1 1/2″ - 419 kW.
Certified and calibrated to INAIL (formerly ISPESL) standards.

Maximum working pressure: 10 bar
Minimum working pressure: 0,3 bar
Medium temperature range: 5–100 °C

Code	Connection	Drain connection	Maximum discharge rating (kW)	Temperature setting (°C)		
542870	1 1/2″ M	1 1/4″ F	136	98	1	10
542880	1 1/2″ M	1 1/2″ F	419	99	1	10

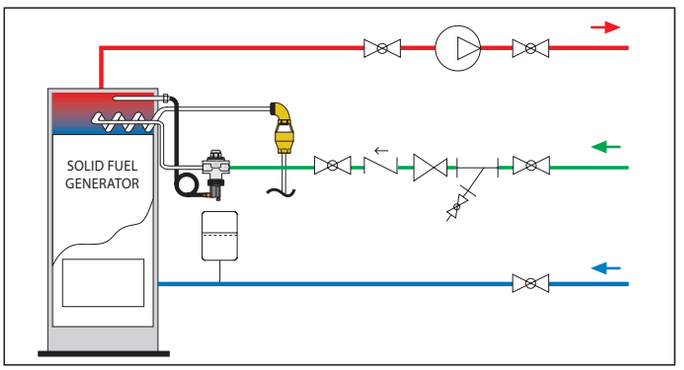

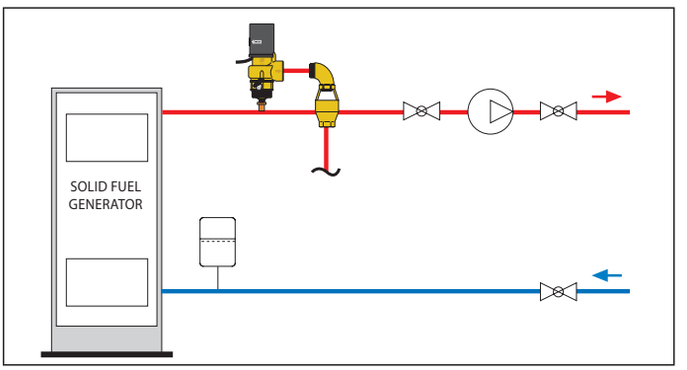



543

Temperature safety relief valve, with double safety sensor.
For solid fuel generators.
Certified to EN 14597.

Maximum working pressure: 10 bar
Medium temperature range: 5–110 °C
Capillary length: 1,3 m
Discharge flow rate with △p=1 bar and T= 110 °C: 3000 l/h

Code	Connection	Temperature setting (°C)		
543503	3/4″ F	98	1	10

Temperature relief valves with automatic filling

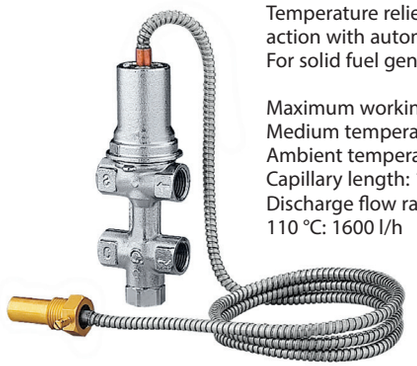

544

Temperature relief valve, with positive action with automatic filling.
For solid fuel generators.

Maximum working pressure: 6 bar
Medium temperature range: 5–110 °C
Ambient temperature range: 1–50 °C
Capillary length: 1,3 m
Discharge flow rate with △p=1 bar and T= 110 °C: 1600 l/h

Code	Connection	Temperature setting (°C)		
544400	1/2" F	100	1	10

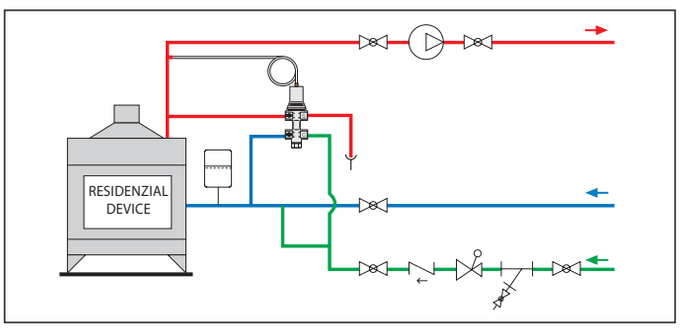



544

Temperature relief valve with automatic filling, with knob for manual discharge.
For solid fuel generators.

Maximum working pressure: 6 bar
Medium temperature range: 5–120 °C
Discharge flow rate with △p=1 bar and T= 110 °C: 1800 l/h

Code	Connection	Temperature setting (°C)		
544501	3/4" M	100	1	-

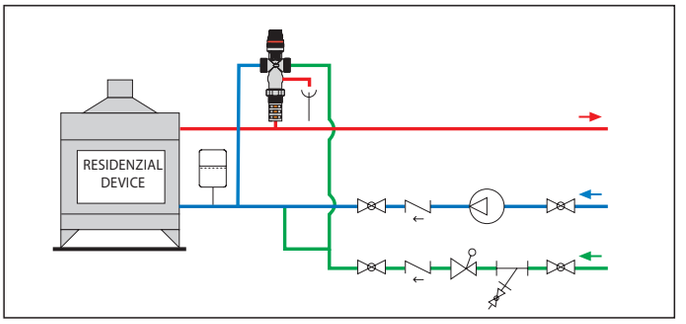

Draught regulating valve



529

Draught regulating valve.
Certified to EN 14597 standard.

Adjustment temperature range: 30–90 °C

Code	Connection	Length pocket (mm)		
529150	3/4" M	58	1	10
529050	3/4" M	58	1	10
529151	3/4" M	78	1	10

CONTROL DEVICES FOR BIOMASS SYSTEMS

Anti-condensation valve



280

Anti-condensation valve with thermostatic control of the return temperature to solid fuel generators.
By-pass complete closing temperature: Tmin = Tset +10 °C = Tr.

Maximum working pressure: 10 bar
Medium temperature range: 5–100 °C
Maximum percentage of glycol: 50 %
Medium: water, glycol solutions
Material: brass

Code	Connection	Notes	DN	Kv (m^3/h)	Temperature setting (°C)		
280054	3/4" M	-	DN 20	3,2	45	1	10
280055	3/4" M	-	DN 20	3,2	55	1	10
280056	3/4" M	-	DN 20	3,2	60	1	10
280057	3/4" M	-	DN 20	3,2	70	1	10
280264	1" M	see note Kv	DN 20	3,2	45	1	10
280265	1" M	see note Kv	DN 20	3,2	55	1	10
280266	1" M	see note Kv	DN 20	3,2	60	1	10
280267	1" M	see note Kv	DN 20	3,2	70	1	10
280064	1" M	-	DN 25	9	45	1	5
280065	1" M	-	DN 25	9	55	1	5
280066	1" M	-	DN 25	9	60	1	5
280074	1 1/4" M	-	DN 32	12	45	1	5
280075	1 1/4" M	-	DN 32	12	55	1	5
280076	1 1/4" M	-	DN 32	12	60	1	5

Valve selection

The valve selection should be made according to the Kv value (corresponding to a specific DN body size) and not only according to the threaded connections. Given the system flow rate, the corresponding head losses on the valve should be calculated by using the Kv value. The sum of the head losses on the valve and the head losses of the rest of the system should be compatible with the available head of the generator pump.
Items 1" - DN 20 and 3/4" - DN 20 have the same kv value.



Spare thermostats for anti-condensation valve.

Code	Notes	Temperature setting (°C)		
F29629	part number 28005. / 28026.	45	1	-
F29630	part number 28005. / 28026.	55	1	-
F29631	part number 28005. / 28026.	60	1	-
F29632	part number 28005. / 28026.	70	1	-
F29633	part number 28006. / 28007. (*)	45	1	-
F29634	part number 28006. / 28007. (*)	55	1	-
F29635	part number 28006. / 28007. (*)	60	1	-

Note (*): Also use for 281, 282, 2850, 2851, 2853, 2855 series.

Anti-condensation recirculation and distribution unit

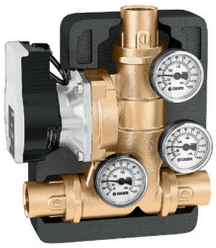

281

Anti-condensation recirculation and distribution unit, with thermostatic control of the return temperature to solid fuel generators.
By-pass complete closing temperature: Tmin = Tset +10 °C = Tr.
With insulation.

Maximum working pressure: 10 bar
Medium temperature range: 5–100 °C
Maximum percentage of glycol: 50 %
Medium: glycol solutions, water
Maximum recommended flow rate: 2 m^3/h
Material: brass
DN: DN 25
Type of pump: Para MS/7

CE

Code	Connection	Temperature setting (°C)		
281064WYP	1" F	45	1	-
281065WYP	1" F	55	1	-
281066WYP	1" F	60	1	-
281074WYP	1 1/4" F	45	1	-
281075WYP	1 1/4" F	55	1	-
281076WYP	1 1/4" F	60	1	-

The unit should be selected according to the head avalaible at the unit connections, depending on the DN, and not only according to the threaded connections. Given the system head losses, the available head of the unit pump should be evaluated.

Application diagram

System with buffer tank

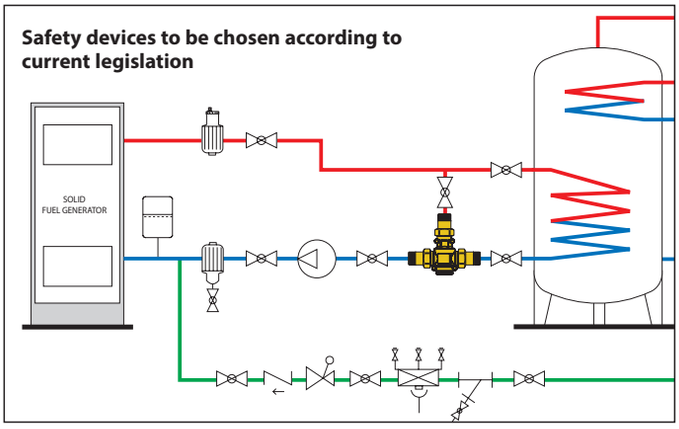

SPARE PARTS

FOR SPARE PARTS, PLEASE CONTACT THE APPROPRIATE DEPARTMENT

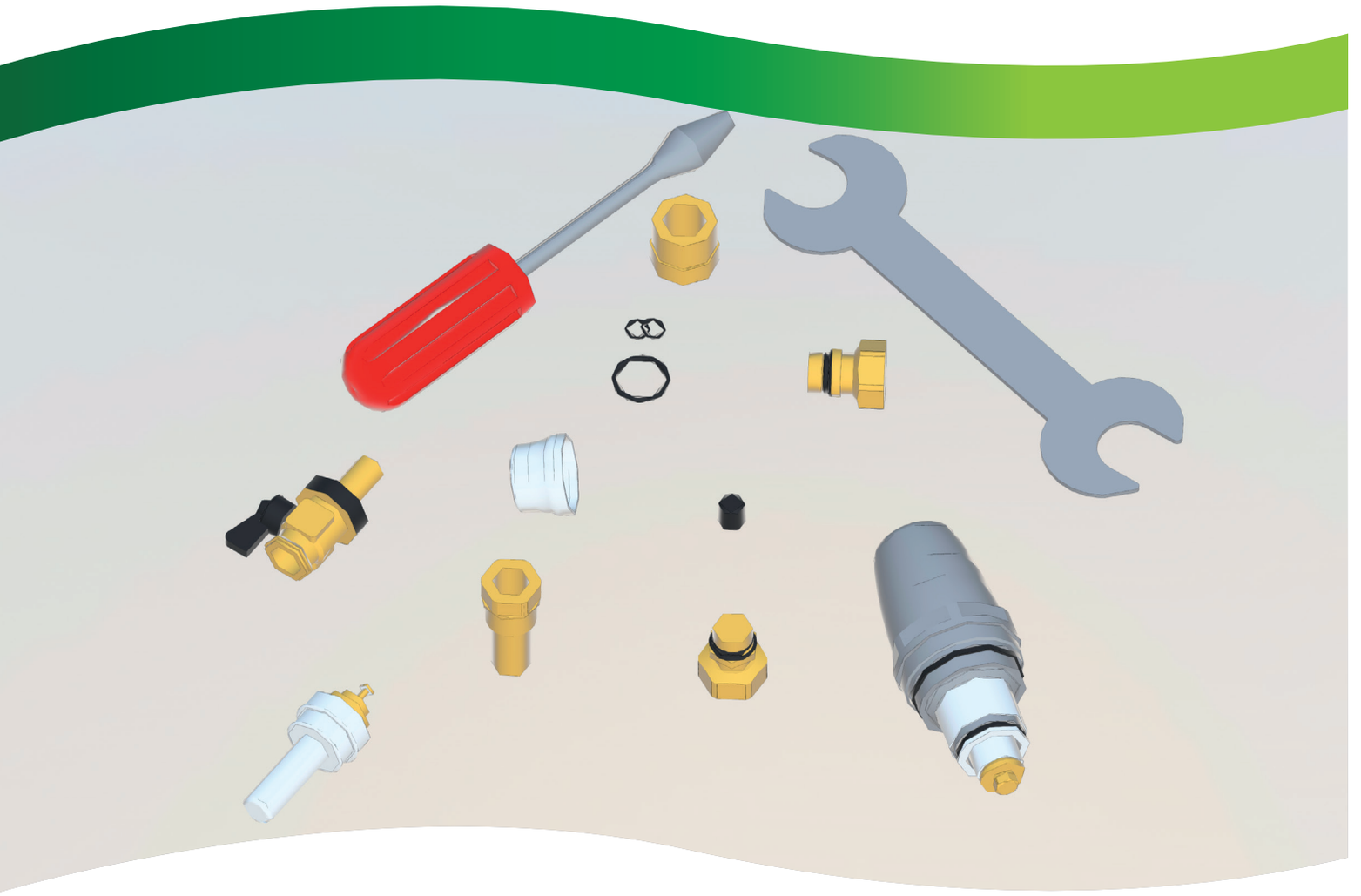

FITTING COUPLING

PRODUCT DIMENSIONS are available on www.caleffi.com

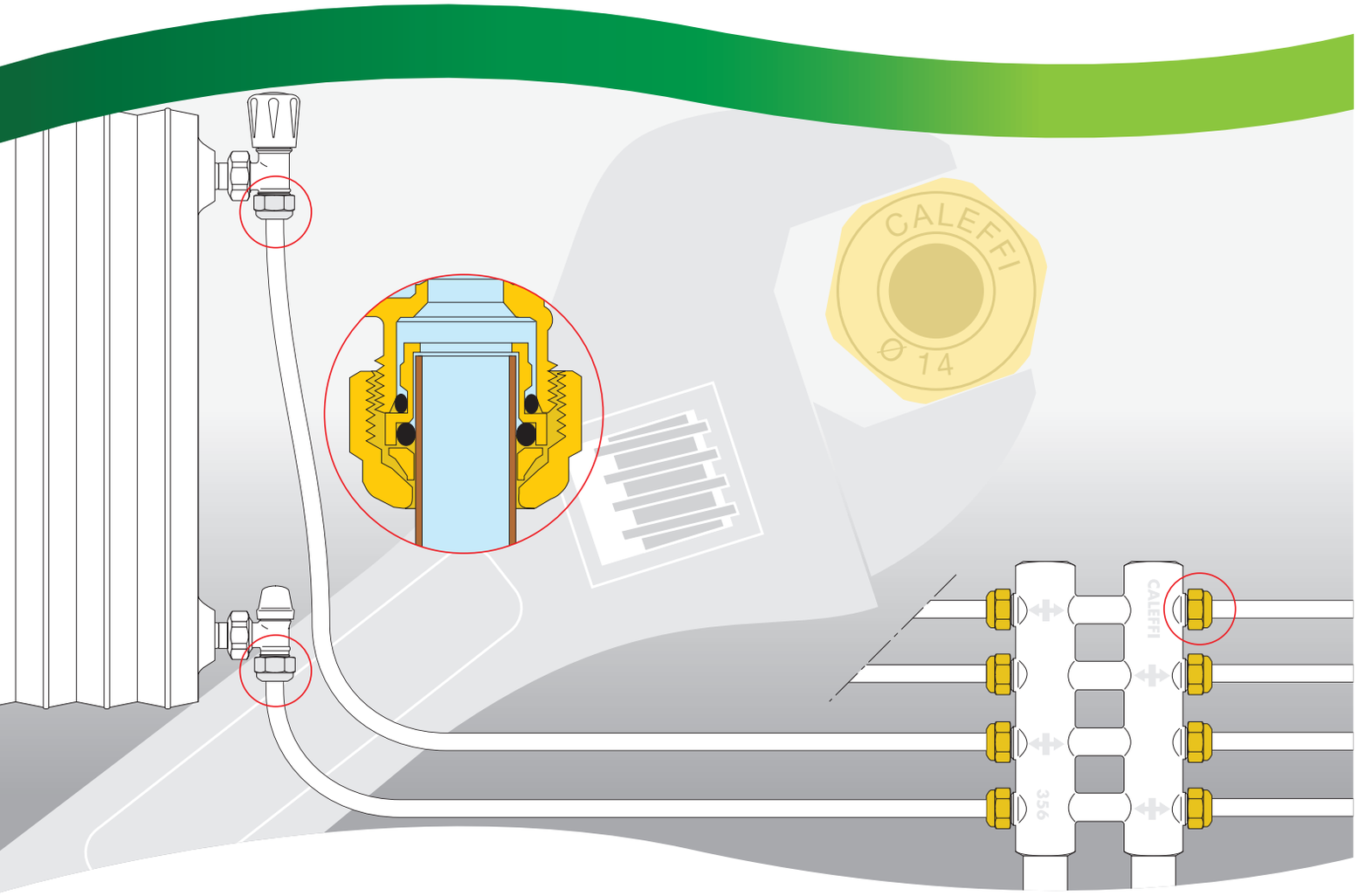

CHROME PLATED BRASS FITTINGS

23 p.1,5 pipes connection

23 p.1,5 M - Ø 18

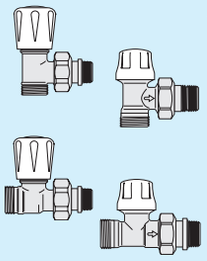

Series: ***338***
339
425
426
222
232
223
233
226
227
237
340
341

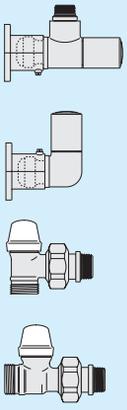

Series: ***4001***
4003
4004
4005

Series:
226
342
343

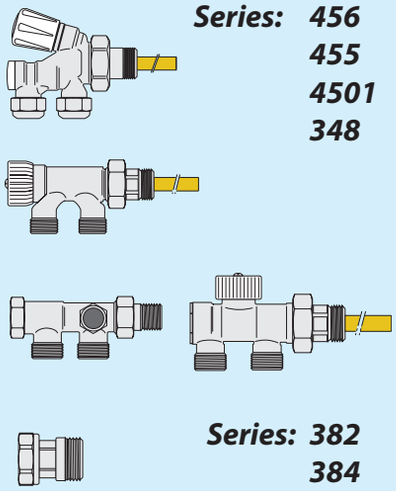

Series: ***456***
455
4501
348

Series: ***382***
384



679
DARCAL

Fitting for multilayer plastic pipes for continuous high temperature use.

Maximum working pressure: 10 bar
Medium temperature range: 0–95 °C
Finish: chrome plated

Code	Connection	Pipe diameter	Notes		
679014	23 p. 1,5	Ø 14x2	-	10	100
679024	23 p. 1,5	Ø 16x2	-	10	100
679025	23 p. 1,5	Ø 16x2,25	-	10	100
679044	23 p. 1,5	Ø 18x2	-	10	100
679064	23 p. 1,5	Ø 20x2	with metal ring	10	100
679065	23 p. 1,5	Ø 20x2,25	with metal ring	10	100
679066	23 p. 1,5	Ø 20x2,5	with metal ring	10	100
679067	23 p. 1,5	Ø 20x2,9	with metal ring for REHAU pipe (see note *)	10	100

For a correct use, adjust the multilayer pipe diameter before installation using the Caleffi calibrator 679 Seriess.

Note(*): For the use with REHAU pipes, use REHAU's calibrator.



681
DARCAL

Self-adjustable diameter fitting for single and multilayer plastic pipes.
Working temperature range 5–80°C (PE-X); 5–75°C (Multi-layer marked 95°C).

Maximum working pressure: 10 bar
Finish: chrome plated

Code	Connection	Pipe diameter		
681000	23 p. 1,5	Øint. 7,5–8, Øext. 12–14	10	100
681002	23 p. 1,5	Øint. 9–9,5, Øext. 14–16	10	100
681001	23 p. 1,5	Øint. 9,5–10, Øext. 12–14	10	100
681006	23 p. 1,5	Øint. 9,5–10, Øext. 14–16	10	100
681015	23 p. 1,5	Øint. 10,5–11, Øext. 14–16	10	100
681017	23 p. 1,5	Øint. 10,5–11, Øext. 16–18	10	100
681024	23 p. 1,5	Øint. 11,5–12, Øext. 14–16	10	100
681026	23 p. 1,5	Øint. 11,5–12, Øext. 16–18	10	100
681035	23 p. 1,5	Øint. 12,5–13, Øext. 16–18	10	100
681044	23 p. 1,5	Øint. 13,5–14, Øext. 16–18	10	100

681
DARCAL



Self-adjustable diameter fitting for single and multilayer plastic pipes.
Working temperature range 5–80°C (PE-X); 5–75°C (Multi-layer marked 95°C).

Maximum working pressure: 10 bar
Medium temperature range: 5–75 °C
Material: brass
Finish: chrome plated

Code	Connection	Pipe diameter		
681101	23 p. 1,5	Øint. 9,5–10, Øext. 12–14	1	50
681124	23 p. 1,5	Øint. 11,5–12, Øext. 14–16	1	50

447



Mechanical fitting, monobloc.
For soft annealed copper, hard copper and stainless steel pipes. With O-Ring seal.

Maximum working pressure: 10 bar
Medium temperature range: -25–120 °C
Finish: chrome plated

Code	Connection	Pipe diameter		
447010	23 p. 1,5	Ø 10	2	100
447012	23 p. 1,5	Ø 12	2	100
447014	23 p. 1,5	Ø 14	2	100
447015	23 p. 1,5	Ø 15	2	100
447016	23 p. 1,5	Ø 16	2	100

437



Mechanical fitting.
For soft annealed copper, hard copper and stainless steel pipes. With O-Ring seal.

Maximum working pressure: 10 bar
Medium temperature range: -25–120 °C
Finish: chrome plated

Code	Connection	Pipe diameter		
437010	23 p. 1,5	Ø 10	1	100
437012	23 p. 1,5	Ø 12	1	100
437014	23 p. 1,5	Ø 14	1	100
437015	23 p. 1,5	Ø 15	1	100
437016	23 p. 1,5	Ø 16	1	100

437



Mechanical fitting.
For soft annealed copper, hard copper and stainless steel pipes. Use with polished chrome plated High-Style valves. With O-Ring seal.

Maximum working pressure: 10 bar
Medium temperature range: -25–120 °C
Material: brass
Finish: chrome plated

Code	Connection	Pipe diameter		
437112	23 p. 1,5	Ø 12	1	50
437114	23 p. 1,5	Ø 14	1	50
437115	23 p. 1,5	Ø 15	1	50
437116	23 p. 1,5	Ø 16	1	50

438



Mechanical fitting.
For soft annealed copper and hard copper pipes. With PTFE seal.

Medium temperature range: 5–80 °C
Finish: chrome plated

Code	Connection	Pipe diameter		
438010	23 p. 1,5	Ø 10	2	100
438012	23 p. 1,5	Ø 12	2	100
438014	23 p. 1,5	Ø 14	2	100
438015	23 p. 1,5	Ø 15	2	100
438016	23 p. 1,5	Ø 16	2	100
438018	23 p. 1,5	Ø 18 with pipe stiffener	2	100

439



Mechanical fitting, with gasket.
Do not use with 232 Seriess valves..
For soft annealed copper and hard copper pipes.

Finish: chrome plated

Code	Connection	Pipe diameter		
439010	23 p. 1,5	Ø 10	1	100
439012	23 p. 1,5	Ø 12	1	100
439014	23 p. 1,5	Ø 14	1	100
439015	23 p. 1,5	Ø 15	1	100
439016	23 p. 1,5	Ø 16	1	100

CHROME PLATED BRASS FITTINGS

3/4" pipes connection

3/4" M - Ø 18

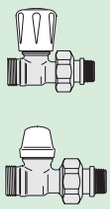

Codes: ***338***452
339452
340452
342452
343452



679
DARCAL

Fitting for multilayer plastic pipes for continuous high temperature use.

Maximum working pressure: 10 bar
Medium temperature range: 0–95 °C
Finish: chrome plated

Code	Connection	Pipe diameter		
679264	3/4" F	Ø 20x2	10	100
679265	3/4" F	Ø 20x2,25	10	100
679266	3/4" F	Ø 20x2,5	10	100

For a correct use, adjust the multilayer pipe diameter before installation using the Caleffi calibrator 679 series.



437

Mechanical fitting.
For soft annealed copper, hard copper and stainless steel pipes. With O-Ring seal.

Maximum working pressure: 10 bar
Medium temperature range: -25–120 °C
Finish: chrome plated

Code	Connection	Pipe diameter		
437510	3/4" F	Ø 10	2	100
437512	3/4" F	Ø 12	2	100
437514	3/4" F	Ø 14	2	100
437515	3/4" F	Ø 15	2	100
437516	3/4" F	Ø 16	2	100
437518	3/4" F	Ø 18	2	10



681
DARCAL

Self-adjustable diameter fitting for single and multilayer plastic pipes.
Working temperature range 5–80°C (PE-X); 5–75°C (Multi-layer marked 95°C).

Maximum working pressure: 10 bar
Finish: chrome plated

Code	Connection	Pipe diameter		
681502	3/4" F	Øint. 7,5–8, Øext. 12–14	10	100
681500	3/4" F	Øint. 9–9,5, Øext. 14–16	10	100
681501	3/4" F	Øint. 9,5–10, Øext. 12–14	10	100
681506	3/4" F	Øint. 9,5–10, Øext. 14–16	10	100
681515	3/4" F	Øint. 10,5–11, Øext. 14–16	10	100
681517	3/4" F	Øint. 10,5–11, Øext. 16–18	10	100
681524	3/4" F	Øint. 11,5–12, Øext. 14–16	10	100
681526	3/4" F	Øint. 11,5–12, Øext. 16–18	10	100
681535	3/4" F	Øint. 12,5–13, Øext. 16–18	10	100
681537	3/4" F	Øint. 12,5–13, Øext. 18–20	10	100
681546	3/4" F	Øint. 13,5–14, Øext. 18–20	10	100
681555	3/4" F	Øint. 14,5–15, Øext. 18–20	10	100
681556	3/4" F	Øint. 15–15,5, Øext. 18–20	10	100
681564	3/4" F	Øint. 15,5–16, Øext. 18–20	10	100



438

Mechanical fitting.
For soft annealed copper and hard copper pipes. With PTFE seal.

Medium temperature range: 5–80 °C
Finish: chrome plated

Code	Connection	Pipe diameter		
438512	3/4" F	Ø 12	2	100
438514	3/4" F	Ø 14	2	100
438515	3/4" F	Ø 15	2	100
438516	3/4" F	Ø 16	2	100
438518	3/4" F	Ø 18	2	100

BRASS FITTINGS

23 p.1,5 pipes connection

23 p.1,5 M - Ø 18



Series: ***350 351 349***

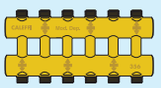

Series: ***356 357 385 383 384***

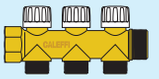

Series: ***354 360***



Series: ***940 941 942 943 944 945 946 947 948***

Code: ***359***003

679 DARCAL



Fitting for multilayer plastic pipe for continuous high temperature use.

Maximum working pressure: 10 bar
Medium temperature range: 0–95 °C

Code	Connection	Pipe diameter		
679114	23 p. 1,5	Ø 14x2	10	100
679124	23 p. 1,5	Ø 16x2	10	100
679125	23 p. 1,5	Ø 16x2,25	10	100
679144	23 p. 1,5	Ø 18x2	10	100

680 DARCAL



Self-adjustable diameter fitting for single and multilayer plastic pipes.
Working temperature range 5–80°C (PE-X); 5–75°C (Multi-layer marked 95°C).

Maximum working pressure: 10 bar

Code	Connection	Pipe diameter		
680000	23 p. 1,5	Øint. 7,5–8, Øext. 12–14	10	100
680002	23 p. 1,5	Øint. 9–9,5, Øext. 14–16	10	100
680001	23 p. 1,5	Øint. 9,5–10, Øext. 12–14	10	100
680006	23 p. 1,5	Øint. 9,5–10, Øext. 14–16	10	100
680015	23 p. 1,5	Øint. 10,5–11, Øext. 14–16	10	100
680017	23 p. 1,5	Øint. 10,5–11, Øext. 16–18	10	100
680024	23 p. 1,5	Øint. 11,5–12, Øext. 14–16	10	100
680026	23 p. 1,5	Øint. 11,5–12, Øext. 16–18	10	100
680035	23 p. 1,5	Øint. 12,5–13, Øext. 16–18	10	100
680044	23 p. 1,5	Øint. 13,5–14, Øext. 16–18	10	100

680 DARCAL



Self-adjustable diameter fitting for single and multilayer plastic pipes.
Working temperature range 5–80°C (PE-X); 5–75°C (Multi-layer marked 95°C).

Maximum working pressure: 10 bar

Code	Connection	Pipe diameter		
680055	23 p. 1,5	Øint. 14,5–15, Øext. 18–20	10	100
680064	23 p. 1,5	Øint. 15,5–16, Øext. 18–20	10	100

347



Mechanical fitting for soft annealed copper, hard copper and stainless steel pipes.
With O-Ring seal.

Maximum working pressure: 10 bar
Medium temperature range: -25–120 °C

Code	Connection	Pipe diameter		
347010	23 p. 1,5	Ø 10	1	100
347012	23 p. 1,5	Ø 12	1	100
347014	23 p. 1,5	Ø 14	1	100
347015	23 p. 1,5	Ø 15	1	100
347016	23 p. 1,5	Ø 16	1	100

446



Mechanical fitting, **monobloc**, for soft annealed copper, hard copper and stainless steel pipes.
With O-Ring seal.

Maximum working pressure: 10 bar
Medium temperature range: -25–120 °C

Code	Connection	Pipe diameter		
446010	23 p. 1,5	Ø 10	2	100
446012	23 p. 1,5	Ø 12	2	100
446014	23 p. 1,5	Ø 14	2	100
446015	23 p. 1,5	Ø 15	2	100
446016	23 p. 1,5	Ø 16	2	100

BRASS FITTINGS

3/4" pipes connection

3/4" M - Ø 18



Series: ***592***

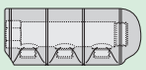

Series: ***650***..2

Series: ***940***
941
942
943
945
946

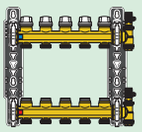

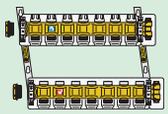

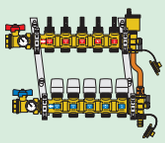

Series: ***662***
6620
6621
663
6630
6631
671
666...S1*
667...S1*
668...S1*
664
665
669
657
171
182



Series: ***940***
941
942
943
945
946

Code: ***359***006

***Do not use with copper pipe fittings 347**

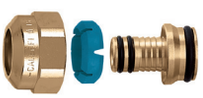

679 DARCAL

Fitting for multilayer pipes with continuous high temperature use.

Maximum working pressure: 10 bar
Medium temperature range: 0–95 °C

Code	Connection	Pipe diameter		
679514	3/4" F	Ø 14x2	10	100
679524	3/4" F	Ø 16x2	10	100
679525	3/4" F	Ø 16x2,25	10	100
679544	3/4" F	Ø 18x2	10	100
679564	3/4" F	Ø 20x2	10	100
679565	3/4" F	Ø 20x2,25	10	100
679566	3/4" F	Ø 20x2,5	10	100

For a correct use, adjust the multilayer pipe diameter before installation using the Caleffi calibrator 679 series.



680 DARCAL

Self-adjustable diameter fitting for single and multilayer plastic pipes.
Working temperature range: 5–80 °C (PE-X), 5–75°C (Multi-layer marked 95°C).

Maximum working pressure: 10 bar

Code	Connection	Pipe diameter		
680507	3/4" F	Øint. 7,5–8, Øext. 10,5–12	10	100
680502	3/4" F	Øint. 7,5–8, Øext. 12–14	10	100
680503	3/4" F	Øint. 8,5–9, Øext. 12–14	10	100
680500	3/4" F	Øint. 9–9,5, Øext. 14–16	10	100
680501	3/4" F	Øint. 9,5–10, Øext. 12–14	10	100
680506	3/4" F	Øint. 9,5–10, Øext. 14–16	10	100
680515	3/4" F	Øint. 10,5–11, Øext. 14–16	10	100
680517	3/4" F	Øint. 10,5–11, Øext. 16–18	10	100
680524	3/4" F	Øint. 11,5–12, Øext. 14–16	10	100
680526	3/4" F	Øint. 11,5–12, Øext. 16–18	10	100
680535	3/4" F	Øint. 12,5–13, Øext. 16–18	10	100
680537	3/4" F	Øint. 12,5–13, Øext. 18–20	10	100
680544	3/4" F	Øint. 13,5–14, Øext. 16–18	10	100
680546	3/4" F	Øint. 13,5–14, Øext. 18–20	10	100
680555	3/4" F	Øint. 14,5–15, Øext. 18–20	10	100
680556	3/4" F	Øint. 15–15,5, Øext. 18–20	10	100
680564	3/4" F	Øint. 15,5–16, Øext. 18–20	10	100
680505	3/4" F	Øint. 17, Øext. 22	10	100



680
DARCAL

Compression ends fitting for multilayer pipe with fitting Male -female.

Code	Connection	Pipe diameter		
680285	3/4″ F	Ø 25x2,5	10	60
680296	3/4″ F	Ø 26x3	10	60



347...S1

Compression fitting.

Maximum working pressure: 10 bar
Medium temperature range: -25–120 °C

Code	Connection	Pipe diameter		
347512S1	3/4″ F	Ø 12	1	50
347514S1	3/4″ F	Ø 14	1	50



347

Compression ends fitting for annealed copper, hard copper, mild steel and stainless steel pipes.
With O-Ring seal.

Maximum working pressure: 10 bar
Medium temperature range: -25–120 °C

Code	Connection	Pipe diameter		
347510	3/4″ F	Ø 10	1	100
347512	3/4″ F	Ø 12	1	100
347514	3/4″ F	Ø 14	1	100
347515	3/4″ F	Ø 15	1	100
347516	3/4″ F	Ø 16	1	100
347518	3/4″ F	Ø 18	1	10

RACCORDERIA IN OTTONE

1” pipes connection

1” M - Ø 25



Series: ***941***
942



680

Self-adjustable diameter fitting for plastic pipes.

Maximum working pressure: 10 bar
Medium temperature range: 5–80 °C

Code	Connection	Internal pipe diameter	External pipe diameter		
680687	1”F	Øint. 17,5	Øext. 25	10	100
680605	1”F	Øint. 19,5	Øext. 25	10	100

We reserve the right to modify our products, make technical improvements and develop them further.
None of the illustrations, numerical data, etc., are binding.

The products in this price list have been designed, manufactured and marketed in accordance with the Standard EN ISO 9001 Quality Management System.
Products marked with the “green dot •” are produced by companies in the Caleffi group.
Products marked with the “blue dot •” are commercialised.

© Copyright 2026 Caleffi

CALEFFI S.p.A.
S.R.229, N.25 · 28010 Fontaneto d'Agogna (NO) · Italia
Tel. +39 0322 8491
info@caleffi.com | www.caleffi.com

0505626