FLOWING EXPERTISE

2025

CALEFFI

Hydronic Solutions

# GENERAL PRODUCT GUIDE

COMPONENTS FOR CENTRAL HEATING SYSTEMS

AIR AND DIRT SEPARATION DEVICES

VALVES AND ACCESSORIES FOR RADIATORS

ZONE AND MOTORISED VALVES, DISTRIBUTION MANIFOLDS, BOXES AND ACCESSORIES

RADIANT PANEL SYSTEM CONTROL

COMPONENTS FOR DOMESTIC WATER SYSTEMS

BACKFLOW PREVENTION DEVICES

BALANCING AND CONTROL DEVICES

FITTINGS

GAS SAFETY

EXPANSION VESSELS, CHRONO-THERMOSTATS, THERMOSTATS

HEAT SYSTEMS

COMPONENTS FOR RENEWABLE ENERGY SYSTEMS

SPARE PARTS - For spare parts, please contact the appropriate department

FITTING COUPLING - PRODUCT DIMENSIONS are available on www.caleffi.com

# GENERAL INDEX


| SERIES | Page |
|---|---|
| **100** | 267-268 |
| **103** • | 263 |
| **108** | 44 |
| **110** | 352-353 |
| **112** | 353 |
| **116** | 207-208 |
| **120** | 258 |
| **121** | 253 |
| **125** | 259 |
| **126** | 253 |
| **127** | 252 |
| **128** | 252 |
| **130** | 242 |
| **130** ≥ DN 65 • | 242 |
| **130** • | 242-267 |
| **132** ≥ DN 65 • | 243 |
| **140** ≥ DN 65 • | 266-268 |
| **142** | 242-266 |
| **145** | 246 |
| **14501.** • | 247-250 |
| **145** ≥ DN 40 • | 248 |
| **146** • | 248 |
| **149** | 249-251 |
| **1520** • | 38-275-302 |
| **161** • | 38-39-39,170-170-275-302-303-339-350 |
| **165** | 33-36 |
| **166** | 34-37-172 |
| **167** | 35 |
| **171** | 168 |
| **182** | 154-164-165-166-167 |
| **200** | 86-99 |
| **201** | 86 |
| **202** | 86 |
| **203** | 86 |
| **204** | 86 |
| **205** | 93-95-97 |
| **209** | 87-93-95-97-99 |
| **210** | 91 |
| **215** | 90-91 |
| **220** | 83 |
| **221** | 83 |
| **222** | 82 |
| **223** | 82 |
| **224** | 83 |
| **225** | 83-85 |
| **226** | 82-85 |
| **227** | 82 |
| **230** | 84-109 |
| **230**100 • | 107 |
| **231** | 84 |
| **232** | 84 |
| **233** | 84 |
| **234** | 84 |
| **237** | 84 |
| **240** | 342 |
| **250** | 334-335 |
| **251** | 335 |
| **2521** | 344 |
| **2522** | 344-345 |
| **2523** | 344 |
| **2527** | 344 |
| **253** | 334 |
| **2540** | 340-341 |
| **2543** | 340 |
| **2544** | 340 |
| **2545** | 340 |
| **2546** | 340 |
| **2547** | 340 |

| SERIES | Page |
|---|---|
| **2548** | 340 |
| **255** | 339 |
| **255** • | 337-338 |
| **257** | 339 |
| **258** | 342 |
| **259** • | 338 |
| **262** | 348 |
| **2620** | 343 |
| **263** | 348 |
| **264** | 346 |
| **265** | 346-350 |
| **278** • | 336-337-339 |
| **279** | 336 |
| **280** | 358 |
| **281** | 358 |
| **3006** | 18 |
| **3010** | 112 |
| **3011** | 112 |
| **3012** | 112 |
| **3013** | 112 |
| **3015** | 112 |
| **302** | 17 |
| **3037** | 236 |
| **3038** | 236 |
| **3040** | 223 |
| **3041** | 237 |
| **3045** | 236 |
| **3046** | 236-237 |
| **3047** | 237 |
| **3048** | 237 |
| **305** | 47-17 |
| **309** | 15-222-334 |
| **311** | 11-13 |
| **312** | 11 |
| **313** | 11-13 |
| **314** | 11 |
| **315** | 23 |
| **319** | 221 |
| **3230** | 224-235 |
| **324** | 234 |
| **327** | 16 |
| **328** | 103 |
| **332** | 224,235 |
| **333** | 224-235 |
| **334** | 224-235 |
| **336** | 17 |
| **337** | 66 |
| **338** | 80-100-109 |
| **3380** | 100 |
| **339** | 80 |
| **340** | 88 |
| **341** | 88 |
| **342** | 85-89-100 |
| **343** | 85-89 |
| **347** | 145-146 |
| **347...S1** | 161 |
| **348** | 103 |
| **349** | 132-133 |
| **350** | 132 |
| **351** | 133 |
| **354** | 134-216 |
| **356** | 135 |
| **357** | 135 |
| **359** | 210-211-212-213-214-215 |
| **360** | 147-216 |
| **361** | 147 |
| **362** | 147 |
| **363** | 147 |
| **364** | 168 |

| SERIES | Page |
|---|---|
| **3640** | 135 |
| **3641** | 135-216 |
| **3642** | 135-143-216 |
| **3642...S1** | 161 |
| **381** | 107 |
| **382** | 107-142 |
| **383** | 100-107-142-143 |
| **384** | 107-142 |
| **385** | 142 |
| **386** | 142-144-158 |
| **3871** | 107 |
| **3872** | 109 |
| **391** | 137-139-158 |
| **391...S1** | 161 |
| **392** | 143 |
| **4000** | 111 |
| **4001** | 92-94-96-98 |
| **4003** | 92-93-94-95-96-98-99 |
| **4004** | 92-93-94-95-96-98-99 |
| **4005** | 102 |
| **401** | 80 |
| **402** | 80 |
| **411** | 88 |
| **412** | 88 |
| **421** | 81-109 |
| **422** | 81 |
| **425** | 81 |
| **426** | 81 |
| **431** | 85-89 |
| **432** | 85-89 |
| **437** | 100-105-106 |
| **438** | 105-106 |
| **439** | 105 |
| **446** | 145 |
| **447** | 105 |
| **4490** | 107 |
| **4496** | 104 |
| **4499** | 101 |
| **4501** | 103 |
| **452** | 103 |
| **453** | 104 |
| **454** | 108 |
| **455** | 102 |
| **456** | 102 |
| **459** | 108 |
| **472** • | 87 |
| **475** | 87 |
| **501** | 62 |
| **5020** | 45-61-161 |
| **5021** | 61-62 |
| **5022** | 62 |
| **5024** | 63 |
| **5025** | 63 |
| **5026** | 63 |
| **5027** | 63 |
| **503** • | 24 |
| **504** | 64 |
| **505** | 65 |
| **5054** | 65 |
| **5055** | 65 |
| **507** | 64 |
| **5080** | 65 |
| **5081** | 65 |
| **510** | 16 |
| **5121** | 13 |
| **513** | 12 |
| **514** | 12 |
| **518** | 49-16-267 |
| **519** | 49-16-36-267 |

| SERIES | Page |
|---|---|
| **520** | 192-195 |
| **5200** | 195 |
| **5201** | 195 |
| **5202** | 172 |
| **521** | 192 |
| **5212** | 194 |
| **5213** | 193-194 |
| **5217** | 193 |
| **5218** | 193-194 |
| **5219** | 193 |
| **522** | 192 |
| **5230** • | 197 |
| **5231** | 196 |
| **524** • | 197 |
| **525** | 223 |
| **5251** | 223 |
| **5261** | 220-221 |
| **5265** | 221 |
| **527 EST** | 10 |
| **528** | 220 |
| **5280** | 220 |
| **5281** | 220 |
| **529** | 357 |
| **530** | 14 |
| **531** | 15 |
| **5320** | 14 |
| **5321** | 14 |
| **5322** | 14 |
| **5327** | 14 |
| **533...H** | 180 |
| **5330** | 180-187 |
| **5330..H** | 182-187 |
| **5331** | 180 |
| **5331..H** | 182 |
| **5332** | 180 |
| **5332..H** | 182 |
| **5334** | 181 |
| **5334..H** | 182 |
| **5335..H** | 183 |
| **5335..HS** | 188 |
| **5336** | 181 |
| **5336..H** | 183 |
| **5337** | 181 |
| **5337..H** | 183 |
| **5338** | 181 |
| **5338..H** | 183 |
| **5339** | 181 |
| **534** | 222 |
| **5350** | 184-187 |
| **5350..H** | 185-187 |
| **5351** | 184 |
| **5360** | 186-187-188 |
| **5362** | 186 |
| **5365** | 186 |
| **5366** | 186 |
| **537** | 187 |
| **5370** | 218 |
| **5377** | 218 |
| **538** | 25-267-268 |
| **539** | 186 |
| **539..H** | 189-189,196 |
| **542** | 356 |
| **543** | 356 |
| **544** | 357 |
| **5450** | 54 |
| **5453** | 55-56-57 |
| **5457** | 57 |
| **5459** | 54-74 |
| **546** | 72-73 |

# GENERAL INDEX


| SERIES | Page |
|---|---|
| **5461** | 72 |
| **5463** | 58 |
| **5464** | 72 |
| **5466** | 58 |
| **547** | 21 |
| **547** ≥ DN 100 • | 21 |
| **548** | 27 |
| **5485** | 45 |
| **5495** | 27 |
| **550** | 30-31-32 |
| **551** | 62-68-69-70 |
| **5516** | 47-69 |
| **5520** | 13 |
| **552080** • | 13 |
| **5521** | 13 |
| **553** | 18 |
| **554** | 18 |
| **5557** • | 222-301 |
| **556** • | 300 |
| **5560** • | 23 |
| **557** • | 23-189 |
| **558** | 20-301 |
| **5580** | 20-301-338 |
| **559** | 28-29-31-32 |
| **560** | 66-108 |
| **561** | 63 |
| **5621** | 64 |
| **5622** | 64 |
| **568** • | 301 |
| **570** | 230 |
| **570** ≥ DN 50 • | 230 |
| **5709** • | 75 |
| **572** | 228-317 |
| **573** | 19-228 |
| **574** | 19-228-229 |
| **575** ≥ DN 150 • | 229-230 |
| **5750** • | 77 |
| **5751** | 229 |
| **576** • | 188 |
| **577** | 46-55 |
| **577** | 26-233 |
| **5771** | 26-218 |
| **578** • | 188 |
| **579** • | 26-233 |
| **5790** | 59 |
| **580** • | 20-76-77-232 |
| **583** | 144 |
| **584** | 144 |
| **585** | 144 |
| **586** | 144 |
| **588** | 278-341 |
| **5881** | 278 |
| **592** | 132-133 |
| **598** | 133 |
| **5991** | 143-216 |
| **5993** | 143-216 |
| **5994** | 144 |
| **5995** | 144 |
| **5996** | 137-144-155-156-161 |
| **6000** | 199-200-201-202 |
| **6001** | 200 |
| **6002** • | 198 |
| **6003** | 202 |
| **6005** | 198 |
| **603** | 223-334 |
| **610** • | 274-272 |
| **611** • | 272 |
| **612** • | 273 |
| **613** • | 21-302 |

| SERIES | Page |
|---|---|
| **618** • | 304 |
| **620** • | 303 |
| **6205** • | 175-304 |
| **621** • | 22 |
| **622** • | 22 |
| **623** • | 22 |
| **624** • | 22 |
| **625** • | 21-302 |
| **626** | 23 |
| **630** | 128 |
| **632** | 128 |
| **633** | 128 |
| **635** | 128 |
| **636** | 270-271 |
| **6370** • | 38-274 |
| **638** | 49-123-124-273 |
| **6400** | 48 |
| **641** | 129 |
| **642** | 129 |
| **643** | 129 |
| **6440** | 48-121 |
| **6442** | 118 |
| **6443** | 119-121-343 |
| **6443...3BY** | 120 |
| **6444** | 120 |
| **6445** | 48 |
| **6446** | 118 |
| **6447** | 119 |
| **6450** | 122 |
| **6452** | 122 |
| **6453** | 122 |
| **6459** | 122 |
| **6480** | 195 |
| **650** | 134 |
| **6509** | 221 |
| **6561** | 126-140-174 |
| **6562** | 127-141-175 |
| **6563** | 126-127-140-174 |
| **6564** | 127-141-175 |
| **6565** • | 247-250-309 |
| **6566** • | 247-250-309 |
| **657** | 143 |
| **658** | 137-149-155-156-161-168 |
| **659** | 148-176 |
| **661** | 167-168-176 |
| **662** | 136-137-155-158 |
| **6620** | 137 |
| **6621** | 137 |
| **663** | 138-139 |
| **6630** | 139 |
| **6631** | 139 |
| **664** | 50-136-156-158-159 |
| **665** | 157 |
| **666...S1** | 160 |
| **667...S1** | 160 |
| **668...S1** | 160-161 |
| **669** | 143 |
| **671** | 154 |
| **675** | 154-158-167-168 |
| **676** | 125 |
| **677** | 125 |
| **678** | 125 |
| **679** | 105-106-145-146 |
| **679** | 106 |
| **680** | 145-146-158 |
| **681** | 100-105-106 |
| **687** • | 24 |
| **688** • | 24-143 |
| **689** • | 23 |

| SERIES | Page |
|---|---|
| **690** • | 25 |
| **691** • | 25 |
| **692** • | 24 |
| **693** • | 24 |
| **694** | 25 |
| **7000** | 307-328 |
| **7002** | 306-309 |
| **70026** | 308 |
| **70028** | 308 |
| **70029** | 308 |
| **7004** | 309 |
| **7008** | 306 |
| **738** | 304 |
| **739** | 304 |
| **750** | 329 |
| **75025** | 341 |
| **7504G** | 326 |
| **7504K** | 326 |
| **7507G** | 326 |
| **7507K** | 326 |
| **7508** | 327-329 |
| **7550** | 201 |
| **7558** | 327-329 |
| **765** | 313 |
| **766** | 313 |
| **767** | 313 |
| **789** | 317-321-322 |
| **7941** | 311 |
| **7942** | 328 |
| **7945** | 325 |
| **7949** | 325-323 |
| **796** | 310 |
| **797** | 312 |
| **798** | 311 |
| **7992** | 310 |
| **837** • | 293-294-295 |
| **838** • | 294-295 |
| **839** • | 296-295 |
| **841** • | 297 |
| **842** • | 297 |
| **8460** • | 297 |
| **8461** • | 297 |
| **847** • | 292 |
| **848** • | 292 |
| **850** • | 292 |
| **852** • | 293 |
| **8540** • | 296-295 |
| **8541** • | 293-295 |
| **855** • | 298 |
| **8561** • | 298 |
| **8562** • | 298 |
| **8563** • | 298 |
| **8565** • | 298 |
| **860** | 284 |
| **860** ≥ DN 75 • | 284 |
| **861** | 284 |
| **861** ≥ DN 75 • | 284 |
| **862** | 285 |
| **863** | 285 |
| **863** ≥ DN 75 • | 285 |
| **864** | 285 |
| **865** | 285 |
| **866** | 286 |
| **867** | 286 |
| **868** | 286 |
| **869** | 286 |
| **870** | 286 |
| **871** | 286-353 |
| **875** | 284 |

| SERIES | Page |
|---|---|
| **876** | 284 |
| **877** | 289 |
| **878** | 289 |
| **879** | 289 |
| **886** | 289 |
| **887** | 289 |
| **888** • | 285 |
| **890** | 288 |
| **891** | 288 |
| **893** | 288 |
| **894** | 288 |
| **900** | 280 |
| **903** | 280 |
| **904** | 280 |
| **9050** | 280 |
| **9057** | 281 |
| **9058** | 281 |
| **9060** | 281 |
| **9067** | 281 |
| **9068** | 282 |
| **910** | 282 |
| **913** | 282 |
| **914** | 282 |
| **930** | 279-282 |
| **936** | 108 |
| **940** | 279 |
| **941** | 279 |
| **942** | 108-279 |
| **943** | 279 |
| **944** | 279 |
| **945** | 279 |
| **946** | 279 |
| **947** | 279 |
| **948** | 279 |
| **960** | 287 |
| **961** | 287 |
| **962** | 287 |
| **963** | 287 |
| **964** | 287 |
| **966** | 287 |
| **967** | 288 |
| **968** | 288 |
| **970** | 288 |
| **975** | 287 |
| **980** | 288 |
| **986** | 288 |
| **KIT5459** | 54-74 |
| **SATK10** • | 321 |
| **SATK15** • | 322 |
| **SATK16** • | 322 |
| **SATK20** • | 318-319 |
| **SATK22** • | 314-315 |
| **SATK30** • | 320 |
| **SATK32** • | 316 |
| **SATK40** • | 320 |
| **SATK50** • | 324-325 |
| **SATK60** • | 323 |

# THE CALEFFI GREEN



## OUR SUSTAINABLE COMMITMENT

The Caleffi Green means facing a future capable of sustaining the needs of today's and tomorrow's people in terms of climate, sustainable comfort, energy saving and the protection of water and people's health.

**WASTE RECOVERY AND MORE**

**85 %** RAW MATERIALS FROM ITALY

**98,7 %** RAW MATERIALS FROM EUROPE

**100 %** EXPANDED POLYURETHANE ELIMINATED FROM PRODUCT PACKAGING

**+11 %** USE OF LOW LEAD BRASS IN 5 YEARS

**-60 %** POLYETHYLENE FOR OUTGOING PACKAGING

**98,5 %** PLASTIC SCRAP RECOVERED

**100 %** BRASS SCRAP RECOVERED

WATCH THE VIDEO

**SAVE RESOURCES PROTECT OUR PLANET**

Our products contribute to

**GREEN REVOLUTION**

deliver the right climate for life.

## OUR SOLUTIONS

### SUPPORTING ENERGY TRANSITION



HEAT PUMP COMPONENTS

### BETTER WATER MANAGEMENT



WATER TREATMENT DEVICES

### SMART DESIGN



CIRCUIT BALANCING DEVICES

### WE CARE FOR WATER AND PEOPLE'S HEALTH



DOMESTIC WATER DEVICES

### SUSTAINABLE COMFORT



HRV AND HVAC SYSTEM COMPONENTS

**FIND OUT MORE**

bim.caleffi.com

# 100% BIM

## WE SHARE OUR EXPERTISE

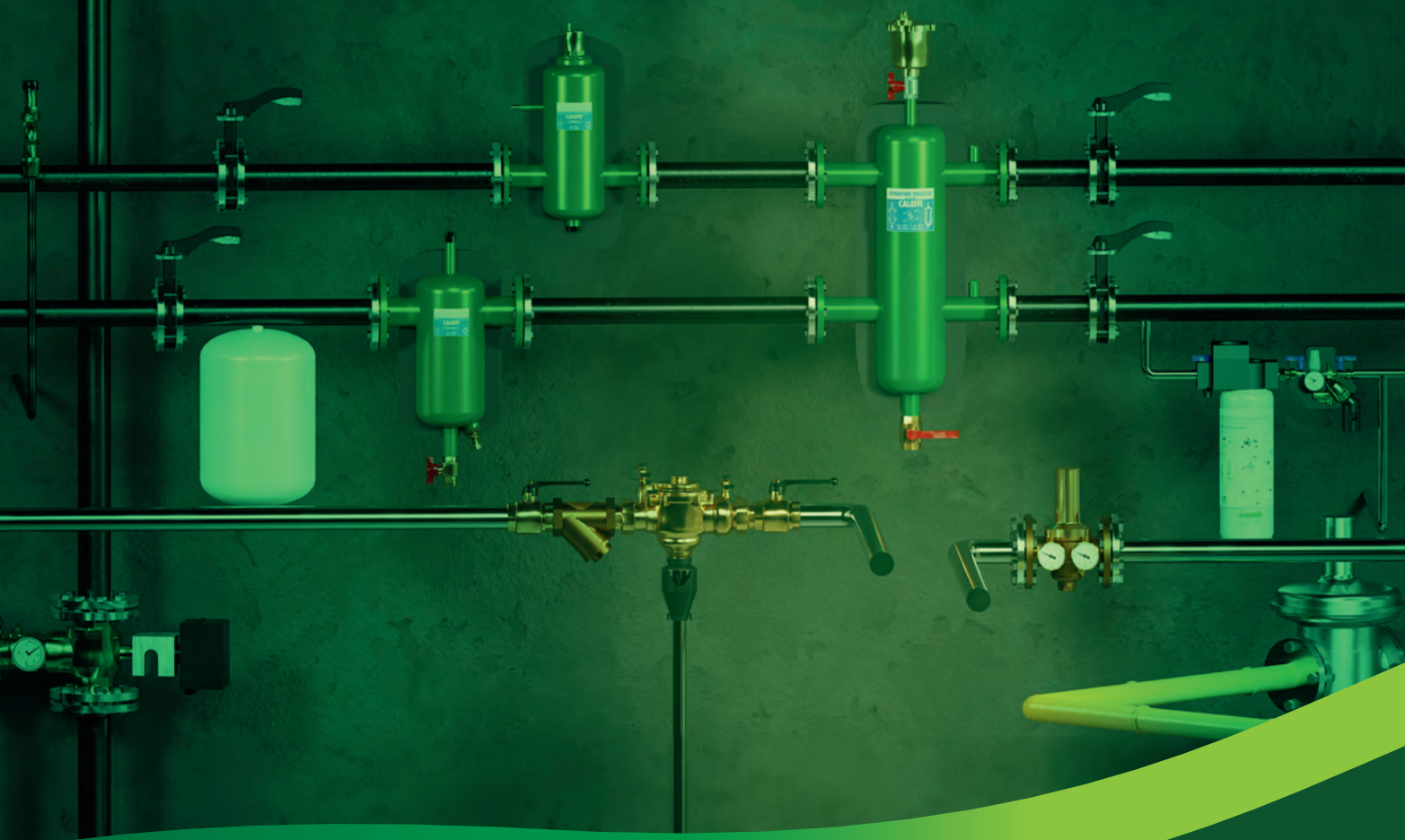

+6000 professionals registered

+10 years expertise

+4000 codes

**Explore bim.caleffi.com,** the portal for MEP design professionals. Download virtual models of our products with constantly updated essential data and parameters. Find families (RFA), projects (RVT), and templates for the MEP sector, as well as models in IFC and BOL formats. Join over 6000 professionals who have already chosen our smart design solutions.

# PRODUCTION PLANTS

MADE IN ITALY

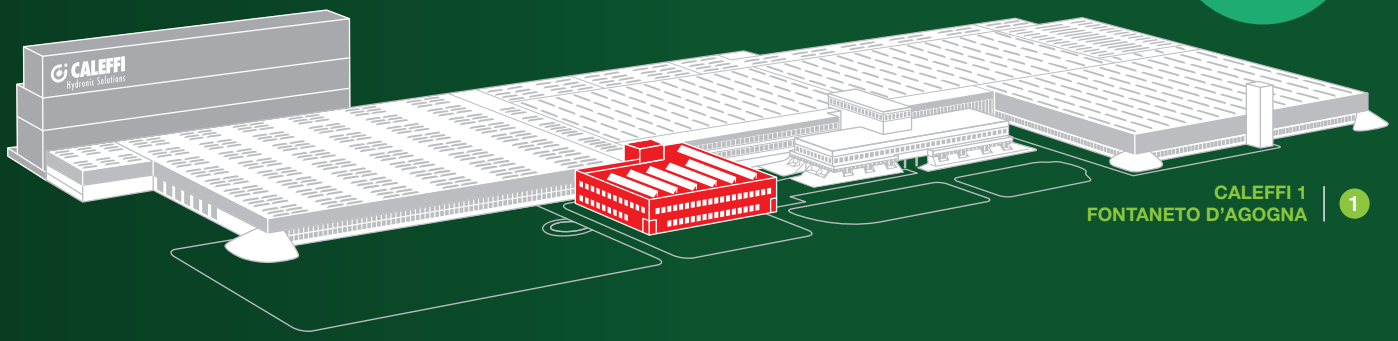


CALEFFI 1
FONTANETO D'AGOGNA | 1

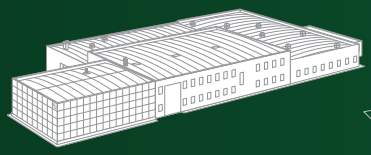

CALEFFI 2
FONTANETO D'AGOGNA | 2

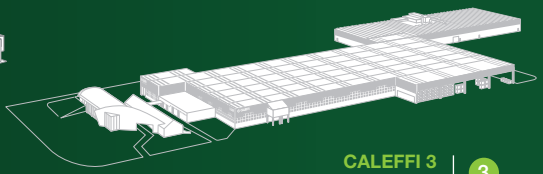

CALEFFI 3
GATTICO-VERUNO | 3

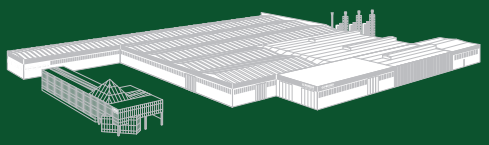

PRESSCO
INVORIO | 4

Caleffi Hydronic Solutions has been redesigning comfort with its HVAC and plumbing solutions for over 60 years.
More than **1000 people** are employed among the Headquarters, the production plants (all set up in Italy) and the foreign branches. Over 90 countries are reached by the brand and new investments are still to come in the near future.

1. **Caleffi S.p.A.**
   Headquarters - Plant 1
   Fontaneto d'Agogna - ITALY
2. **Caleffi S.p.A.**
   Plant 2
   Fontaneto d'Agogna - ITALY
3. **Caleffi S.p.A.**
   Plant 3
   Gattico-Veruno - ITALY
4. **PRESSCO S.p.A.**
   Brass moulding and machining
   Invorio - ITALY

# WHERE WE ARE WORLDWIDE

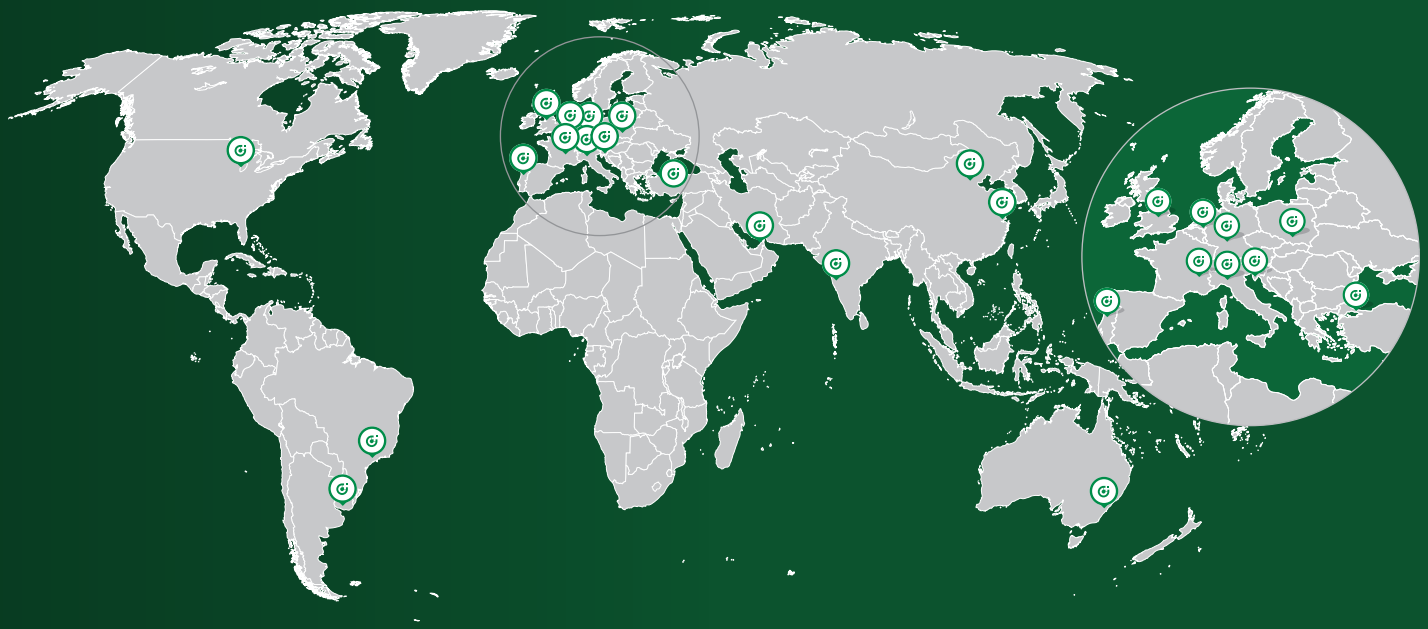

www.caleffi.com

# APPROVAL & CERTIFICATIONS



bsi.

## Certificate of Registration

QUALITY MANAGEMENT SYSTEM - ISO 9001:2015

Si certifica che:

Caleffi S.p.A.
S.R. 229 N. 25
Fontaneto d'Agogna (NO)
28010
Italy

Detiene il Certificato n° **FM 21654**

e applica un Sistema di Gestione per la Qualità in conformità ai requisiti ISO 9001:2015 con riferimento al seguente scopo:

Progettazione, fabbricazione e commercializzazione di componenti, per applicazioni civili e industriali, relativi a impianti di riscaldamento/raffrescamento, idrico-sanitari, solari, geotermici, biomassa, trattamento acqua, gas, sistemi di ventilazione e trattamento aria.

Le attività rientrano nel Settore IAF 17.

In nome e per conto di BSI:

David Fardel, Country Manager, Assurance - Continental Europe

Certificazione originale: 1992-09-28
Ultima emissione: 2024-04-22

Data di validità: 2024-05-08
Scadenza: 2027-05-07

Pagina: 1 di 2

ACCREDIA

making excellence a habit™

Il presente certificato è emesso in forma elettronica, è esclusiva proprietà di BSI ed è legato al rispetto delle condizioni contrattuali.
L'autenticità di un certificato elettronico può essere verificata online
Printed copies can be validated at www.bsigroup.com/ClientDirectory

Per informazioni e contatti: BSI Group Italia srl, via Gaetano De Castillia 23, Milano, Italy, phone: +39 02 4441 8150
Società facente parte del Gruppo BSI



ICIM

CISQ is a member of IQNET

CERTIFICATO N. / CERTIFICATE No. ICIM-14001-000512-04

SI CERTIFICA CHE IL SISTEMA DI GESTIONE AMBIENTALE DI
WE HEREBY CERTIFY THAT THE ENVIRONMENTAL MANAGEMENT SYSTEM OPERATED BY

**CALEFFI S.P.A.**

SEDE CENTRALE / HEADQUARTER

Strada Regionale 229, 25 28010 Fontaneto d'Agogna NO IT - Italia

PER LE UNITÀ OPERATIVE VEDERE L'ALLEGATO
FOR OPERATIVE UNITS SEE ATTACHMENT

È CONFORME ALLA NORMA / IS IN COMPLIANCE WITH THE STANDARD

**UNI EN ISO 14001:2015**

Sistema di Gestione Ambientale / Environmental Management System

PER LE SEGUENTI ATTIVITÀ / FOR THE FOLLOWING ACTIVITIES

**EA: 14 - 18**

Progettazione e fabbricazione di componenti idrotermici, sia per applicazioni in campo civile che industriale, realizzati mediante lavorazioni meccaniche (transfer e plurimandrino), stampaggio plastico a iniezione e assemblaggio.

*Design and manufacture of hydrothermal components for civil and industrial applications, by mechanical processes (transference and multi-spindle), plastic injection molding and assembly.*

Certificazione rilasciata in conformità al Regolamento Tecnico ACCREDIA RT 08
Certificate issued in accordance with the Technical Regulations ACCREDIA RT 08

Il presente certificato è soggetto al rispetto del documento ICIM "Regolamento per la certificazione dei sistemi di gestione" e al relativo Schema specifico.
The use and the validity of this certificate shall satisfy the requirements of the ICIM document "Rules for the certification of company management systems" and specific Scheme.

Per informazioni puntuali e aggiornate circa eventuali variazioni intervenute nello stato della certificazione di cui al presente certificato, si prega di contattare l'n° telefonico +39 02 733471 o scrivere a mail info@icim.it
For timely and updated information about any changes in the certification status referred to in this certificate, please contact the number +39 02 733471 or email address info@icim.it

| DATA EMISSIONE / FIRST ISSUE | EMISSIONE CORRENTE / CURRENT ISSUE | DATA DI SCADENZA / EXPIRING DATE |
|---|---|---|
| 05/06/2012 | 05/06/2024 | 04/06/2027 |

Vincenzo Delacqua
Rappresentante Direzione / Management Representative
ICIM S.p.A.
Piazza Don Enrico Mapelli, 75 – 20099 Sesto San Giovanni (MI)
www.icim.it

ACCREDIA

CISQ



ICIM

CISQ is a member of IQNET

CERTIFICATO N. / CERTIFICATE No. ICIM-45001-051184-00

SI CERTIFICA CHE IL SISTEMA DI GESTIONE DELLA SALUTE E SICUREZZA NEI LUOGHI DI LAVORO DI
WE HEREBY CERTIFY THAT THE OCCUPATIONAL HEALTH AND SAFETY MANAGEMENT SYSTEM OPERATED BY

**CALEFFI S.P.A.**

SEDE CENTRALE / HEADQUARTER

Strada Regionale 229, 25 28010 Fontaneto d'Agogna NO IT - Italia

PER LE UNITÀ OPERATIVE VEDERE L'ALLEGATO
FOR OPERATIVE UNITS SEE ATTACHMENT

È CONFORME ALLA NORMA / IS IN COMPLIANCE WITH THE STANDARD

**UNI EN ISO 45001:2023**

Sistema di Gestione della Salute e Sicurezza nei Luoghi di Lavoro
Occupational Health and Safety Management System

PER LE SEGUENTI ATTIVITÀ / FOR THE FOLLOWING ACTIVITIES

**IAF: 18 - 14**

Progettazione e fabbricazione di componenti idrotermici, sia per applicazioni in campo civile che industriale, realizzati mediante lavorazioni meccaniche (transfer e plurimandrino), stampaggio plastico a iniezione e assemblaggio.

*Design and Manufacture Of Hydrothermal Components for Civil And Industrial Applications, by Mechanical Processes (Transference And Multi-Spindle), Plastic Injection Molding And Assembly*

Il presente certificato è soggetto al rispetto del documento ICIM "Regolamento per la certificazione dei sistemi di gestione" e al relativo Schema specifico.
The use and the validity of this certificate shall satisfy the requirements of the ICIM document "Rules for the certification of company management systems" and specific Scheme.

Per informazioni puntuali e aggiornate circa eventuali variazioni intervenute nello stato della certificazione di cui al presente certificato, si prega di contattare l'n° telefonico +39 02 733471 o scrivere a mail info@icim.it
For timely and updated information about any changes in the certification status referred to in this certificate, please contact the number +39 02 733471 or email address info@icim.it

| DATA EMISSIONE / FIRST ISSUE | EMISSIONE CORRENTE / CURRENT ISSUE | DATA DI SCADENZA / EXPIRING DATE |
|---|---|---|
| 05/12/2024 | 05/12/2024 | 04/12/2027 |

Vincenzo Delacqua
Rappresentante Direzione / Management Representative
ICIM S.p.A.
Piazza Don Enrico Mapelli, 75 – 20099 Sesto San Giovanni (MI)
www.icim.it

ACCREDIA

CISQ



COMUNITÀ EUROPEA

AEO

**Certificato AEO**

IT AEOF 12 0576

| 1. Titolare del Certificato AEO | 2. Autorità che rilascia il Certificato |
|---|---|
| CALEFFI SPA<br>Codice ECMI: IT04104020962 | Agenzia delle Dogane<br>Direzione centrale gestione tributi e rapporto con gli utenti - Ufficio per i regimi doganali e fiscali |

Il Titolare indicato nel riquadro 1 è un

**Operatore economico autorizzato**

**Semplificazioni doganali / Sicurezza (AEOF)**

3. Data di validità del certificato 29/05/2012

Il Direttore dell'Ufficio



# COMPONENTS FOR CENTRAL HEATING SYSTEMS

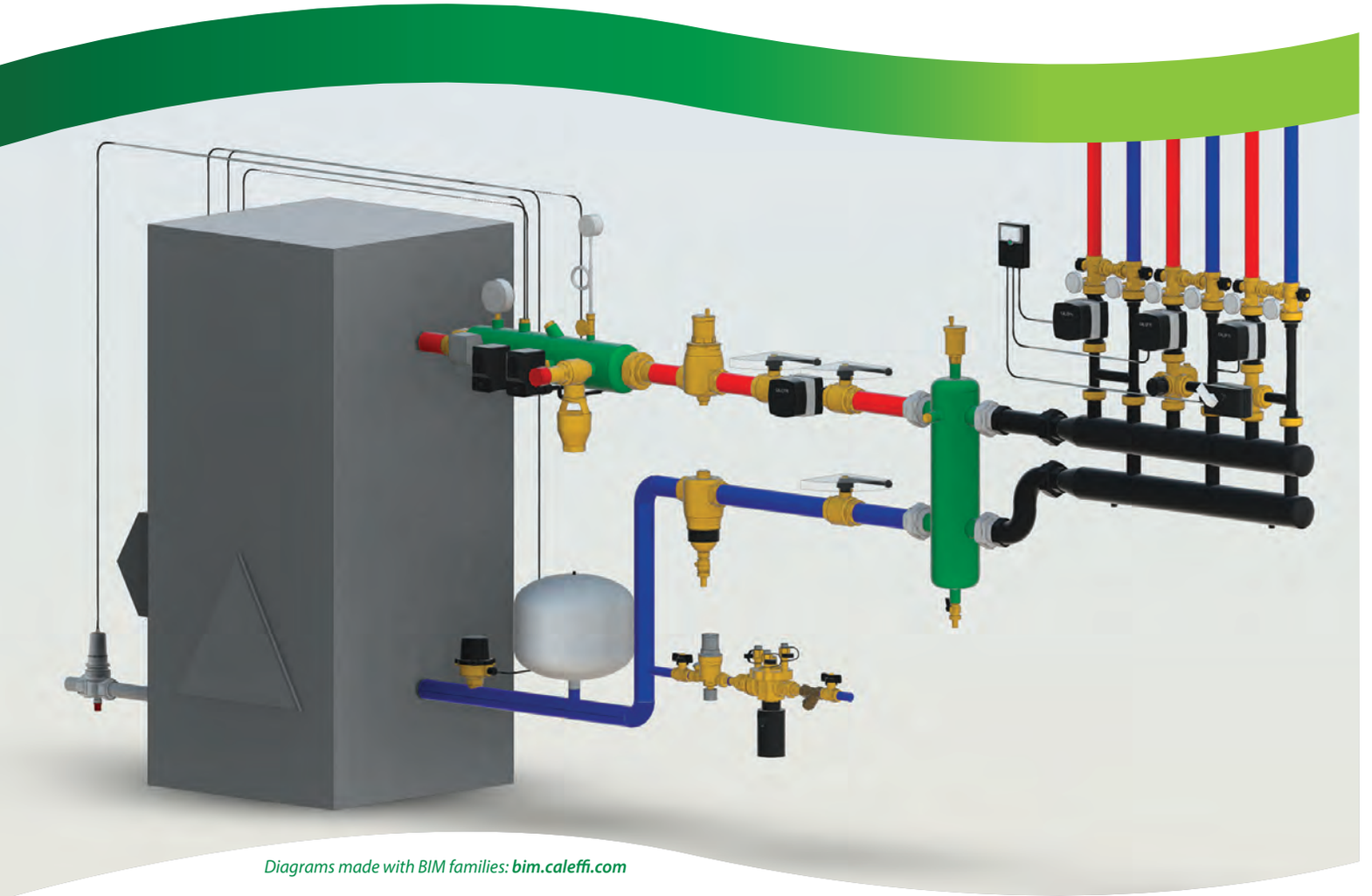

*Diagrams made with BIM families:* ***bim.caleffi.com***

**Safety relief valves**
**Safety relief valves for domestic water systems**
**Differential pressure control devices**
**Check valves**
**Instrument holders**
**Filling units**
**Accessories for expansion vessels**
**Control devices and accessories**
**Strainers**
**Hydraulic separators**
**Hydraulic separators-manifolds**
**Manifolds for central heating system**
**Supply units**
**Components for heat pump systems**

# SAFETY RELIEF VALVES

## Standard safety relief valves



### 527 EST

Safety relief valve.
Settings: 2,25 - 2,5 - 3 - 3,5 - 4 - 4,5 - 5 - 5,4 - 6 bar.
Discharge overpressure: 10 %.
Closing differential: 20 %.

Medium temperature range: 5–110 °C
Nominal pressure: PN 10

CE 2797

| Code | Connection | Drain connection | Pressure setting (bar) | | |
|---|---|---|---|---|---|
| 527422 EST | 1/2″F | 3/4″F | 2,25 | 1 | 25 |
| 527425 EST | 1/2″F | 3/4″F | 2,5 | 1 | 25 |
| 527427 EST | 1/2″F | 3/4″F | 2,7 | 1 | 25 |
| 527430 EST | 1/2″F | 3/4″F | 3 | 1 | 25 |
| 527435 EST | 1/2″F | 3/4″F | 3,5 | 1 | 25 |
| 527440 EST | 1/2″F | 3/4″F | 4 | 1 | 25 |
| 527445 EST | 1/2″F | 3/4″F | 4,5 | 1 | 25 |
| 527450 EST | 1/2″F | 3/4″F | 5 | 1 | 25 |
| 527454 EST | 1/2″F | 3/4″F | 5,4 | 1 | 25 |
| 527460 EST | 1/2″F | 3/4″F | 6 | 1 | 25 |
| 527522 EST | 3/4″F | 1″F | 2,25 | 1 | 25 |
| 527525 EST | 3/4″F | 1″F | 2,5 | 1 | 25 |
| 527527 EST | 3/4″F | 1″F | 2,7 | 1 | 25 |
| 527530 EST | 3/4″F | 1″F | 3 | 1 | 25 |
| 527535 EST | 3/4″F | 1″F | 3,5 | 1 | 25 |
| 527540 EST | 3/4″F | 1″F | 4 | 1 | 25 |
| 527545 EST | 3/4″F | 1″F | 4,5 | 1 | 25 |
| 527550 EST | 3/4″F | 1″F | 5 | 1 | 25 |
| 527554 EST | 3/4″F | 1″F | 5,4 | 1 | 25 |
| 527560 EST | 3/4″F | 1″F | 6 | 1 | 25 |
| 527622 EST | 1″F | 1 1/4″F | 2,25 | 1 | 10 |
| 527625 EST | 1″F | 1 1/4″F | 2,5 | 1 | 10 |
| 527627 EST | 1″F | 1 1/4″F | 2,7 | 1 | 10 |
| 527630 EST | 1″F | 1 1/4″F | 3 | 1 | 10 |
| 527635 EST | 1″F | 1 1/4″F | 3,5 | 1 | 10 |
| 527640 EST | 1″F | 1 1/4″F | 4 | 1 | 10 |
| 527645 EST | 1″F | 1 1/4″F | 4,5 | 1 | 10 |
| 527650 EST | 1″F | 1 1/4″F | 5 | 1 | 10 |
| 527654 EST | 1″F | 1 1/4″F | 5,4 | 1 | 10 |
| 527660 EST | 1″F | 1 1/4″F | 6 | 1 | 10 |
| 527722 EST | 1 1/4″F | 1 1/2″F | 2,25 | 1 | 10 |
| 527725 EST | 1 1/4″F | 1 1/2″F | 2,5 | 1 | 10 |
| 527727 EST | 1 1/4″F | 1 1/2″F | 2,7 | 1 | 10 |
| 527730 EST | 1 1/4″F | 1 1/2″F | 3 | 1 | 10 |
| 527735 EST | 1 1/4″F | 1 1/2″F | 3,5 | 1 | 10 |
| 527740 EST | 1 1/4″F | 1 1/2″F | 4 | 1 | 10 |
| 527745 EST | 1 1/4″F | 1 1/2″F | 4,5 | 1 | 10 |
| 527750 EST | 1 1/4″F | 1 1/2″F | 5 | 1 | 10 |
| 527754 EST | 1 1/4″F | 1 1/2″F | 5,4 | 1 | 10 |
| 527760 EST | 1 1/4″F | 1 1/2″F | 6 | 1 | 10 |



### 527 EST

Safety relief valve.
Special settings.
Settings: 1 - 1,5 - 2 - 7 - 8 bar.
Discharge overpressure: 10 %.
Closing differential: 20 %.

Medium temperature range: 5–110 °C
Nominal pressure: PN 10

CE 2797

| Code | Connection | Drain connection | Pressure setting (bar) | | |
|---|---|---|---|---|---|
| 527410 EST | 1/2″F | 3/4″F | 1 | 1 | 25 |
| 527415 EST | 1/2″F | 3/4″F | 1,5 | 1 | 25 |
| 527420 EST | 1/2″F | 3/4″F | 2 | 1 | 25 |
| 527470 EST | 1/2″F | 3/4″F | 7 | 1 | 25 |
| 527480 EST | 1/2″F | 3/4″F | 8 | 1 | 25 |
| 527510 EST | 3/4″F | 1″F | 1 | 1 | 25 |
| 527515 EST | 3/4″F | 1″F | 1,5 | 1 | 25 |
| 527520 EST | 3/4″F | 1″F | 2 | 1 | 25 |
| 527570 EST | 3/4″F | 1″F | 7 | 1 | 25 |
| 527580 EST | 3/4″F | 1″F | 8 | 1 | 25 |
| 527610 EST | 1″F | 1 1/4″F | 1 | 1 | 10 |
| 527615 EST | 1″F | 1 1/4″F | 1,5 | 1 | 10 |
| 527620 EST | 1″F | 1 1/4″F | 2 | 1 | 10 |
| 527670 EST | 1″F | 1 1/4″F | 7 | 1 | 10 |
| 527680 EST | 1″F | 1 1/4″F | 8 | 1 | 10 |
| 527710 EST | 1 1/4″F | 1 1/2″F | 1 | 1 | 10 |
| 527715 EST | 1 1/4″F | 1 1/2″F | 1,5 | 1 | 10 |
| 527720 EST | 1 1/4″F | 1 1/2″F | 2 | 1 | 10 |
| 527770 EST | 1 1/4″F | 1 1/2″F | 7 | 1 | 10 |
| 527780 EST | 1 1/4″F | 1 1/2″F | 8 | 1 | 10 |



## 311

Safety relief valve. Female connections.
Discharge overpressure: 20 %.
Closing differential: 20 %.

Medium temperature range: 5–110 °C
Nominal pressure: PN 10

| Code | Connection | Drain connection | Pressure setting (bar) | | |
|---|---|---|---|---|---|
| **311**415 | 1/2″ F | 1/2″ F | 1,5 | 1 | 50 |
| **311**425 | 1/2″ F | 1/2″ F | 2,5 | 1 | 50 |
| **311**430 | 1/2″ F | 1/2″ F | 3 | 1 | 50 |
| **311**435 | 1/2″ F | 1/2″ F | 3,5 | 1 | 50 |
| **311**440 | 1/2″ F | 1/2″ F | 4 | 1 | 50 |
| **311**450 | 1/2″ F | 1/2″ F | 5 | 1 | 50 |
| **311**460 | 1/2″ F | 1/2″ F | 6 | 1 | 50 |
| **311**470 | 1/2″ F | 1/2″ F | 7 | 1 | 50 |
| **311**480 | 1/2″ F | 1/2″ F | 8 | 1 | 50 |
| **311**520 | 3/4″ F | 3/4″ F | 2 | 1 | 50 |
| **311**525 | 3/4″ F | 3/4″ F | 2,5 | 1 | 50 |
| **311**530 | 3/4″ F | 3/4″ F | 3 | 1 | 50 |
| **311**535 | 3/4″ F | 3/4″ F | 3,5 | 1 | 50 |
| **311**540 | 3/4″ F | 3/4″ F | 4 | 1 | 50 |
| **311**550 | 3/4″ F | 3/4″ F | 5 | 1 | 50 |
| **311**555 | 3/4″ F | 3/4″ F | 5,5 | 1 | 50 |
| **311**560 | 3/4″ F | 3/4″ F | 6 | 1 | 50 |
| **311**570 | 3/4″ F | 3/4″ F | 7 | 1 | 50 |
| **311**580 | 3/4″ F | 3/4″ F | 8 | 1 | 50 |
| **311**590 | 3/4″ F | 3/4″ F | 9 | 1 | 50 |



## 312

Safety relief valve, male - female connections.
Discharge overpressure: 20 %.
Closing differential: 20 %.

Medium temperature range: 5–110 °C
Nominal pressure: PN 10

| Code | Connection | Drain connection | Pressure setting (bar) | | |
|---|---|---|---|---|---|
| **312**428 | 1/2″ M | 1/2″ F | 1,8 | 1 | 50 |
| **312**425 | 1/2″ M | 1/2″ F | 2,5 | 1 | 50 |
| **312**430 | 1/2″ M | 1/2″ F | 3 | 1 | 50 |
| **312**435 | 1/2″ M | 1/2″ F | 3,5 | 1 | 50 |
| **312**440 | 1/2″ M | 1/2″ F | 4 | 1 | 50 |
| **312**450 | 1/2″ M | 1/2″ F | 5 | 1 | 50 |
| **312**460 | 1/2″ M | 1/2″ F | 6 | 1 | 50 |
| **312**470 | 1/2″ M | 1/2″ F | 7 | 1 | 50 |
| **312**480 | 1/2″ M | 1/2″ F | 8 | 1 | 50 |



## 313

Safety relief valve, female connections. With pressure gauge.
Note (*): Only with pressure gauge connection.
Discharge overpressure: 20 %.
Closing differential: 20 %.

Medium temperature range: 5–90 °C
Nominal pressure: PN 10

| Code | Connection | Drain connection | Notes | Pressure setting (bar) | | |
|---|---|---|---|---|---|---|
| **313**425 | 1/2″ F | 1/2″ F | - | 2,5 | 1 | 50 |
| **313**430 | 1/2″ F | 1/2″ F | - | 3 | 1 | 50 |
| **313**432 | 1/2″ F | 1/2″ F | (*) | 3 | 1 | 50 |
| **313**460 | 1/2″ F | 1/2″ F | - | 6 | 1 | 50 |
| **313**470 | 1/2″ F | 1/2″ F | - | 7 | 1 | 50 |
| **313**480 | 1/2″ F | 1/2″ F | - | 8 | 1 | 50 |
| **313**525 | 3/4″ F | 3/4″ F | - | 2,5 | 1 | 50 |
| **313**530 | 3/4″ F | 3/4″ F | - | 3 | 1 | 50 |
| **313**532 | 3/4″ F | 3/4″ F | (*) | 3 | 1 | 50 |
| **313**560 | 3/4″ F | 3/4″ F | - | 6 | 1 | 50 |
| **313**570 | 3/4″ F | 3/4″ F | - | 7 | 1 | 50 |
| **313**580 | 3/4″ F | 3/4″ F | - | 8 | 1 | 50 |



## 314

Safety relief valve, male - female connections. With pressure gauge.
Discharge overpressure: 20 %.
Closing differential: 20 %.

Medium temperature range: 5–90 °C
Nominal pressure: PN 10

| Code | Connection | Drain connection | Pressure setting (bar) | | |
|---|---|---|---|---|---|
| **314**425 | 1/2″ M | 1/2″ F | 2,5 | 1 | 50 |
| **314**430 | 1/2″ M | 1/2″ F | 3 | 1 | 50 |
| **314**460 | 1/2″ M | 1/2″ F | 6 | 1 | 50 |
| **314**470 | 1/2″ M | 1/2″ F | 7 | 1 | 50 |
| **314**480 | 1/2″ M | 1/2″ F | 8 | 1 | 50 |



## 513

Safety relief valve, female connections.
Discharge overpressure: 20 %.
Closing differential: 20 %.

Medium temperature range: 5–110 °C
Nominal pressure: PN 10

CE 2797

| Code | Connection | Drain connection | Pressure setting (bar) | | |
|---|---|---|---|---|---|
| **513**415 | 1/2″F | 1/2″F | 1,5 | 1 | 50 |
| **513**420 | 1/2″F | 1/2″F | 2 | 1 | 50 |
| **513**425 | 1/2″F | 1/2″F | 2,5 | 1 | 50 |
| **513**430 | 1/2″F | 1/2″F | 3 | 1 | 50 |
| **513**435 | 1/2″F | 1/2″F | 3,5 | 1 | 50 |
| **513**460 | 1/2″F | 1/2″F | 6 | 1 | 50 |
| **513**470 | 1/2″F | 1/2″F | 7 | 1 | 50 |
| **513**480 | 1/2″F | 1/2″F | 8 | 1 | 50 |



## 513

Safety relief valve, female connections.
Discharge overpressure: 20 %.
Closing differential: 20 %.

Medium temperature range: 5–110 °C
Nominal pressure: PN 10

CE 2797

| Code | Connection | Drain connection | Pressure setting (bar) | | |
|---|---|---|---|---|---|
| **513**615 | 1″F | 1 1/4″F | 1,5 | 1 | 25 |
| **513**620 | 1″F | 1 1/4″F | 2 | 1 | 25 |
| **513**625 | 1″F | 1 1/4″F | 2,5 | 1 | 25 |
| **513**630 | 1″F | 1 1/4″F | 3 | 1 | 25 |
| **513**635 | 1″F | 1 1/4″F | 3,5 | 1 | 25 |
| **513**640 | 1″F | 1 1/4″F | 4 | 1 | 25 |
| **513**655 | 1″F | 1 1/4″F | 5,5 | 1 | 25 |
| **513**660 | 1″F | 1 1/4″F | 6 | 1 | 25 |
| **513**670 | 1″F | 1 1/4″F | 7 | 1 | 25 |
| **513**680 | 1″F | 1 1/4″F | 8 | 1 | 25 |
| **513**725 | 1 1/4″F | 1 1/2″F | 2,5 | 1 | 10 |
| **513**730 | 1 1/4″F | 1 1/2″F | 3 | 1 | 10 |
| **513**735 | 1 1/4″F | 1 1/2″F | 3,5 | 1 | 10 |
| **513**760 | 1 1/4″F | 1 1/2″F | 6 | 1 | 10 |
| **513**770 | 1 1/4″F | 1 1/2″F | 7 | 1 | 10 |
| **513**780 | 1 1/4″F | 1 1/2″F | 8 | 1 | 10 |



## 514

Safety relief valve, male - female connections.
Discharge overpressure: 20 %.
Closing differential: 20 %.

Medium temperature range: 5–110 °C
Nominal pressure: PN 10

CE 2797

| Code | Connection | Drain connection | Pressure setting (bar) | | |
|---|---|---|---|---|---|
| **514**420 | 1/2″M | 1/2″F | 2 | 1 | 50 |
| **514**425 | 1/2″M | 1/2″F | 2,5 | 1 | 50 |
| **514**430 | 1/2″M | 1/2″F | 3 | 1 | 50 |
| **514**435 | 1/2″M | 1/2″F | 3,5 | 1 | 50 |
| **514**440 | 1/2″M | 1/2″F | 4 | 1 | 50 |
| **514**450 | 1/2″M | 1/2″F | 5 | 1 | 50 |
| **514**460 | 1/2″M | 1/2″F | 6 | 1 | 50 |
| **514**470 | 1/2″M | 1/2″F | 7 | 1 | 50 |
| **514**480 | 1/2″M | 1/2″F | 8 | 1 | 50 |

## Accessories for safety relief valves



### 5521

Elbow tundish.

| Code | Connection | Drain connection | | |
|---|---|---|---|---|
| **552**140 | 1/2″ M | 3/4″ F | 1 | - |
| **552**150 | 3/4″ M | 3/4″ F | 1 | - |
| **552**160 | 1″ M | 1 1/4″ F | 1 | - |
| **552**170 | 1 1/4″ M | 1 1/4″ F | 1 | - |



### 5520

Straight tundish.

| Code | Connection | Drain connection | | |
|---|---|---|---|---|
| **552**050 | 3/4″ F | 3/4″ F | 1 | 25 |
| **552**070 | 1 1/4″ F | 1 1/4″ F | 1 | 5 |



### 5520

Pre-formed special tundish.

| Code | Connection | | |
|---|---|---|---|
| **552**080 | 1 1/2″ F | 3 | - |

## NF certified safety relief valves



### 311

Safety relief valve.
Discharge overpressure 20 %.
Closing differential: 15 %.
Certified to NF P 52-001 standard - Class 2.

Medium temperature range: 5–110 °C
Maximum discharge rating: 100 kW

| Code | Connection | Pressure setting (bar) | | |
|---|---|---|---|---|
| **311**431 | 1/2″ F | 3 | 1 | 50 |



### 313

Safety relief valve.
Discharge overpressure: 20 %.
Closing differential: 15 %.
Certified to NF P 52-001 standard - Class 2.

Medium temperature range: 5–110 °C
Maximum discharge rating: 100 kW
Nominal pressure: PN 10

| Code | Connection | Pressure setting (bar) | | |
|---|---|---|---|---|
| **313**433 | 1/2″ F | 3 | 50 | - |



### 5121

Safety relief valve.
Discharge overpressure 20 %.
Closing differential 15 %.
Closing differential 15%.
Certified to NF P 52-001 - Class 2 standard.

Medium temperature range: 5–110 °C
Maximum discharge rating: 110 kW

| Code | Connection | Pressure setting (bar) | | |
|---|---|---|---|---|
| **5121**31 | 1/2″ F | 3 | 1 | - |

## TUV certified safety relief valves



### 5320

Safety relief valve.
Discharge overpressure: 20 %.
Closing differential: 20 %.

Medium temperature range: 5–120 °C
Maximum discharge rating: 50 kW
Maximum percentage of glycol: 50 %
Medium: water, glycol solutions

CE 2797 www.tuv.com ID 0000014051

| Code | Connection | Drain connection | Pressure setting (bar) | | |
|---|---|---|---|---|---|
| **5320**42 | 1/2″F | 3/4″F | 2,5 | 1 | 50 |
| **5320**43 | 1/2″F | 3/4″F | 3 | 1 | 50 |



### 5321

Safety relief valve.
With pressure gauge.
Discharge overpressure: 20 %.
Closing differential: 20 %.

Medium temperature range: 5–120 °C
Maximum discharge rating: 50 kW
Maximum percentage of glycol: 50 %
Medium: water, glycol solutions

CE 2797 www.tuv.com ID 0000014051

| Code | Connection | Drain connection | Pressure setting (bar) | | |
|---|---|---|---|---|---|
| **5321**42 | 1/2″F | 3/4″F | 2,5 | 1 | 50 |
| **5321**43 | 1/2″F | 3/4″F | 3 | 1 | 50 |



### 5322

Safety relief valve.
With pressure gauge connection..
Discharge overpressure: 20 %.
Closing differential: 20 %.

Medium temperature range: 5–90 °C
Maximum discharge rating: 50 kW
Maximum percentage of glycol: 50 %
Medium: water, glycol solutions

CE 2797 www.tuv.com ID 0000014051

| Code | Connection | Drain connection | Pressure setting (bar) | | |
|---|---|---|---|---|---|
| **5322**42 | 1/2″F | 3/4″F | 2,5 | 1 | 50 |
| **5322**43 | 1/2″F | 3/4″F | 3 | 1 | 50 |

## TUV certified safety relief valves



### 5327

Safety relief valve.
Discharge overpressure: 20 %.
Closing differential: 20 %.

Medium temperature range: 5–120 °C
Maximum discharge rating: 50 kW
Maximum percentage of glycol: 50 %
Medium: water, glycol solutions

CE 2797 www.tuv.com ID 0000014051

| Code | Connection | Drain connection | Pressure setting (bar) | | |
|---|---|---|---|---|---|
| **5327**42 | 1/2″M | 3/4″F | 2,5 | 1 | - |
| **5327**43 | 1/2″M | 3/4″F | 3 | 1 | - |



### 530

Safety relief valve.
Discharge overpressure: 20 %.
Closing differential: 20 %.

Medium temperature range: 5–120 °C
Maximum percentage of glycol: 50 %
Medium: water, glycol solutions

CE 2797 www.tuv.com ID 0000013864

| Code | Connection | Drain connection | Pressure setting (bar) | | |
|---|---|---|---|---|---|
| **530**525 | Rp 3/4″F | Rp 1″F | 2,5 | 1 | 25 |
| **530**530 | Rp 3/4″F | Rp 1″F | 3 | 1 | 25 |



### 530

Safety relief valve.
Settings: 4 - 5 - 6 - 7 - 8 - 9 bar without TUV certification.
Discharge overpressure: 20 %.
Closing differential: 20 %.

Medium temperature range: 5–120 °C
Maximum percentage of glycol: 50 %
Medium: water, glycol solutions

CE 2797 www.tuv.com ID 0000013864

| Code | Connection | Drain connection | Pressure setting (bar) | | |
|---|---|---|---|---|---|
| **530**625 | Rp 1″F | Rp 1 1/4″F | 2,5 | 1 | 25 |
| **530**630 | Rp 1″F | Rp 1 1/4″F | 3 | 1 | 25 |
| **530**640 | Rp 1″F | Rp 1 1/4″F | 4 | 1 | 25 |
| **530**650 | Rp 1″F | Rp 1 1/4″F | 5 | 1 | 25 |
| **530**660 | Rp 1″F | Rp 1 1/4″F | 6 | 1 | 25 |
| **530**670 | Rp 1″F | Rp 1 1/4″F | 7 | 1 | 25 |
| **530**680 | Rp 1″F | Rp 1 1/4″F | 8 | 1 | 25 |
| **530**690 | Rp 1″F | Rp 1 1/4″F | 9 | 1 | 25 |
| **530**725 | Rp 1 1/4″F | Rp 1 1/2″F | 2,5 | 1 | 10 |
| **530**730 | Rp 1 1/4″F | Rp 1 1/2″F | 3 | 1 | 10 |
| **530**740 | Rp 1 1/4″F | Rp 1 1/2″F | 4 | 1 | 10 |
| **530**750 | Rp 1 1/4″F | Rp 1 1/2″F | 5 | 1 | 10 |
| **530**760 | Rp 1 1/4″F | Rp 1 1/2″F | 6 | 1 | 10 |
| **530**770 | Rp 1 1/4″F | Rp 1 1/2″F | 7 | 1 | 10 |
| **530**780 | Rp 1 1/4″F | Rp 1 1/2″F | 8 | 1 | 10 |
| **530**790 | Rp 1 1/4″F | Rp 1 1/2″F | 9 | 1 | 10 |

# SAFETY RELIEF VALVES FOR DOMESTIC WATER SYSTEMS

## Safety relief valves



### 531

Safety relief valve **for domestic water systems**. Female connections.
Discharge overpressure: 20 %.
Closing differential: 20 %.

Medium temperature range: 5–95 °C
Medium: domestic water

| Code | Connection | Drain connection | Pressure setting (bar) | | |
|---|---|---|---|---|---|
| **531**440 | 1/2″F | 3/4″F | 4 | 1 | 50 |
| **531**460 | 1/2″F | 3/4″F | 6 | 1 | 50 |
| **531**480 | 1/2″F | 3/4″F | 8 | 1 | 50 |
| **531**410 | 1/2″F | 3/4″F | 10 | 1 | 50 |
| **531**540 | Rp 3/4″F | Rp 1″F | 4 | 1 | 25 |
| **531**560 | Rp 3/4″F | Rp 1″F | 6 | 1 | 25 |
| **531**580 | Rp 3/4″F | Rp 1″F | 8 | 1 | 25 |
| **531**510 | Rp 3/4″F | Rp 1″F | 10 | 1 | 25 |



### 531

Safety relief valve **for domestic water systems**. Female connections.
Discharge overpressure: 20 %.
Closing differential: 20 %.

Medium temperature range: 5–95 °C
Medium: domestic water

| Code | Connection | Drain connection | Pressure setting (bar) | | |
|---|---|---|---|---|---|
| **531**640 | Rp 1″F | Rp 1 1/4″F | 4 | 1 | 25 |
| **531**660 | Rp 1″F | Rp 1 1/4″F | 6 | 1 | 25 |
| **531**680 | Rp 1″F | Rp 1 1/4″F | 8 | 1 | 25 |
| **531**610 | Rp 1″F | Rp 1 1/4″F | 10 | 1 | 25 |
| **531**740 | Rp 1 1/4″F | Rp 1 1/2″F | 4 | 1 | 10 |
| **531**760 | Rp 1 1/4″F | Rp 1 1/2″F | 6 | 1 | 10 |
| **531**780 | Rp 1 1/4″F | Rp 1 1/2″F | 8 | 1 | 10 |
| **531**710 | Rp 1 1/4″F | Rp 1 1/2″F | 10 | 1 | 10 |

## Temperature and pressure relief valves



### 309

Temperature and pressure relief valve.
**For domestic water system, to protect the hot water storage.**
**Certified to EN 1490 with settings: 4 - 7 - 10 bar.**

Temperature setting: 90 °C
Material: dezincification resistant brass DR

| Code | Main connection | Drain connection | Pressure setting (bar) | Maximum discharge rating (kW) | Probe/cable length (mm) | | |
|---|---|---|---|---|---|---|---|
| **309**430 | 1/2″M | Ø 15 | 3 | 10 | 100 | 1 | 20 |
| **309**440 | 1/2″M | Ø 15 | 4 | 10 | 100 | 1 | 20 |
| **309**460 | 1/2″M | Ø 15 | 6 | 10 | 100 | 1 | 20 |
| **309**470 | 1/2″M | Ø 15 | 7 | 10 | 100 | 1 | 20 |
| **309**400 | 1/2″M | Ø 15 | 10 | 10 | 100 | 1 | 20 |
| **309**542 | 3/4″M | Ø 15 | 4 | 10 | 100 | 1 | 20 |
| **309**530 | 3/4″M | Ø 22 | 3 | 25 | 100 | 1 | 20 |
| **309**560 | 3/4″M | Ø 22 | 6 | 25 | 100 | 1 | 20 |
| **309**570 | 3/4″M | Ø 22 | 7 | 25 | 100 | 1 | 20 |
| **309**500 | 3/4″M | Ø 22 | 10 | 25 | 100 | 1 | 20 |
| **309**435 | 1/2″M | Ø 15 | 3 | 10 | 200 | 1 | 20 |
| **309**445 | 1/2″M | Ø 15 | 4 | 10 | 200 | 1 | 20 |
| **309**465 | 1/2″M | Ø 15 | 6 | 10 | 200 | 1 | 20 |
| **309**475 | 1/2″M | Ø 15 | 7 | 10 | 200 | 1 | 20 |
| **309**405 | 1/2″M | Ø 15 | 10 | 10 | 200 | 1 | 20 |
| **309**547 | 3/4″M | Ø 15 | 4 | 10 | 200 | 1 | 20 |
| **309**535 | 3/4″M | Ø 22 | 3 | 25 | 200 | 1 | 20 |
| **309**565 | 3/4″M | Ø 22 | 6 | 25 | 200 | 1 | 20 |
| **309**575 | 3/4″M | Ø 22 | 7 | 25 | 200 | 1 | 20 |
| **309**505 | 3/4″M | Ø 22 | 10 | 25 | 200 | 1 | 20 |



### 309

Temperature and pressure relief valve.
**For domestic water system, to protect the hot water storage.**
**For systems with nominal pressure of 400 kPa.**

Temperature setting: 95 °C
Pressure setting: 6 bar
Material: dezincification resistant brass DR

SANS 198

| Code | Main connection | Drain connection | Probe/cable length (mm) | Maximum discharge rating (kW) | | |
|---|---|---|---|---|---|---|
| **309**563 | 3/4″M | Ø 22 | 100 | 25 | 1 | 20 |

# DIFFERENTIAL PRESSURE CONTROL DEVICES

## Differential by-pass valve



### 519

Differential by-pass valve, adjustable with graduated scale.

Maximum working pressure: 10 bar
Medium temperature range: 0–110 °C
Medium: water, glycol solutions
Maximum percentage of glycol: 30 %

WRAS APPROVED PRODUCT CERTIFICATION MARK

| Code | Inlet connection | Outlet connection | Setting range (m g.w.) | | |
|---|---|---|---|---|---|
| **519**002 | Ø 22 | Ø 22 | 1–6 | 1 | 50 |
| **519**500 | 3/4" F | 3/4" M | 1–6 | 1 | 50 |
| **519**504 | 3/4" F | 3/4" M | 10–40 | 1 | 50 |
| **519**700 | 1 1/4" F | 1 1/4" M | 1–6 | 1 | 10 |
| **519**703 | 1 1/4" F | 1 1/4" M | 5–25 | 1 | 10 |



### 518

Differential by-pass valve, adjustable with graduated scale.

Maximum working pressure: 10 bar
Medium temperature range: 0–100 °C
Medium: water, glycol solutions
Maximum percentage of glycol: 30 %

| Code | Connection | Setting range (m g.w.) | | |
|---|---|---|---|---|
| **518**015 | 3/4" M | 1–6 | 1 | 25 |



### 518

Differential by-pass valve, adjustable with graduated scale.

Medium temperature range: 0–100 °C
Maximum percentage of glycol: 30 %
Medium: water, glycol solutions
Maximum working pressure: 10 bar

| Code | Connection | Setting range (m g.w.) | | |
|---|---|---|---|---|
| **518**500 | 3/4" F | 1–6 | 1 | 25 |
| **518**002 | Ø 22 | 1–6 | 1 | 25 |

# CHECK VALVES

## Standard check valves with shut-off



### 327 BALLSTOP

Ball valve with built-in check valve for heating systems.
Low pressure drops.

Maximum working pressure: 16 bar
Medium temperature range: 5–110 °C

| Code | Connection | Notes | | |
|---|---|---|---|---|
| **327**400 | 1/2" F | butterfly handle | 10 | - |
| **327**500 | 3/4" F | butterfly handle | 10 | - |
| **327**600 | 1" F | lever handle | 4 | - |
| **327**700 | 1 1/4" F | lever handle | 4 | - |
| **327**800 | 1 1/2" F | lever handle | 2 | - |
| **327**900 | 2" F | lever handle | 1 | - |



### 510

Anti-thermosiphon check valve to prevent natural circulation of water.
Straight or angled connections, by moving the cap.

Maximum working pressure: 10 bar
Medium temperature range: 5–110 °C

| Code | Connection | | |
|---|---|---|---|
| **510**500 | 3/4" F | 1 | 20 |
| **510**600 | 1" F | 1 | 20 |
| **510**700 | 1 1/4" F | 1 | 20 |

# INSTRUMENT HOLDERS

## Brass instrument holder



### 336

Assembled instrument holder for heating systems.
Complete with:
- air vent;
- safety relief valve;
- pressure gauge;
- automatic shut-off cock for expansion vessel.

Medium temperature range: 5–110 °C
Maximum discharge rating: 50 kW

| Code | Connection | Notes | Pressure setting (bar) | | |
|---|---|---|---|---|---|
| **336**630 | 3/4″F | with automatic shut-off cock | 3 | 1 | 5 |
| **336**631 | 3/4″F | with ball shut-off cock | 3 | 1 | 5 |



### 302

Combined air separator with heating system accessories.
Complete with air vent, safety relief valve, pressure gauge.
**With insulation**.

Medium temperature range: 5–110 °C
Maximum discharge rating: 50 kW

| Code | Connection | Notes | Pressure setting (bar) | | |
|---|---|---|---|---|---|
| **302**630 | 1″F | without insulation | 3 | 1 | 10 |
| **302**631 | 1″F | - | 3 | 1 | 10 |



### 336

Instrument holder for heating systems.
Complete with automatic shut-off cock for expansion vessel and male connection for safety valve 531 series.
Up to 50 kW.

Medium temperature range: 5–110 °C

| Code | Connection | Maximum discharge rating (kW) | | |
|---|---|---|---|---|
| **336**600 | 3/4″F | 50 | 2 | 10 |

## Technopolymer instrument holder

### 305

Instrument holder kit in technopolymer material for heating systems.
Complete with:
- air vent;
- safety relief valve in technopolymer material;
- pressure gauge;
- automatic shut-off cock for expansion vessels and fixing brackets.
**With insulation**.

Medium temperature range: 5–90 °C
Maximum discharge rating: 50 kW

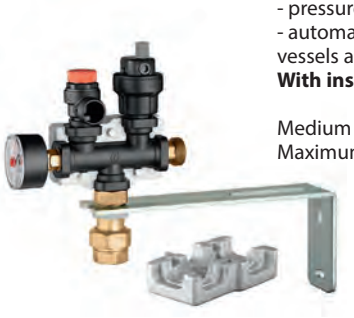

| Code | Connection | Notes | Pressure setting (bar) | | |
|---|---|---|---|---|---|
| **305**503 | 3/4″F | TÜV | 3 | 1 | 10 |



### 305

Instrument holder in technopolymer material for heating systems.
Complete with:
- air vent;
- safety relief valve in technopolymer material;
- pressure gauge.
**With insulation**.

Medium temperature range: 5–90 °C
Maximum discharge rating: 50 kW

| Code | Connection | Notes | Pressure setting (bar) | | |
|---|---|---|---|---|---|
| **305**663 | 1″F | TÜV | 3 | 1 | 5 |



### 305

Instrument holder in technopolymer material for heating systems.
Complete with:
- air vent in technopolymer material;
- safety relief valve;
- pressure gauge.
**With insulation**.

Medium temperature range: 5–90 °C
Maximum discharge rating: 50 kW
Material: technopolymer

| Code | Connection | Notes | Pressure setting (bar) | | |
|---|---|---|---|---|---|
| **305**671 | 1″F | - | 1,8 | 1 | 5 |
| **305**673 | 1″F | NF | 3 | 1 | 5 |
| **305**674 | 1″F | without insulation | 4 | 1 | 5 |

# FILLING UNITS

## Standard filling units



### 553

Automatic filling unit, with manual cock, strainer, check valve.

Maximum upstream pressure: 16 bar
Medium temperature range: 5–70 °C
Adjustment pressure range: 0,3–4 bar

| Code | Inlet connection | Outlet connection | Notes | | |
|---|---|---|---|---|---|
| **553**040 | 1/2″ M | 1/2″ F | with pressure gauge connection 1/4″ F | 1 | 10 |
| **553**140 | 1/2″ M | 1/2″ F | with pressure gauge | 1 | 10 |



### 553

Pre-adjustable automatic filling unit, anti-scale, inspectionable, with pressure setting indicator, manual cock, strainer, check valve.

Maximum upstream pressure: 16 bar
Medium temperature range: 5–65 °C
Adjustment pressure range: 0,2–4 bar

| Code | Inlet connection | Outlet connection | Notes | | |
|---|---|---|---|---|---|
| **553**540 | 1/2″ M | 1/2″ F | with pressure gauge connection 1/4″ F | 1 | 10 |
| **553**640 | 1/2″ M | 1/2″ F | with pressure gauge | 1 | 10 |



### 553

Pre-adjustable automatic filling unit, anti-scale, inspectionable, with pressure setting indicator, manual cock, strainer, check valve. With hose connection.

Medium temperature range: 2–65 °C
Maximum upstream pressure: 16 bar
Adjustment pressure range: 0,2–4 bar

| Code | Inlet connection | Outlet connection | Notes | | |
|---|---|---|---|---|---|
| **553**740 | Ø 15 hose connection | 1/2″ F | with pressure gauge connection | 1 | 10 |
| **553**840 | Ø 15 hose connection | 1/2″ F | with pressure gauge | 1 | 10 |

### 554

Pre-adjustable automatic filling unit for high flow rates, with double shut-off valve, check valve.
Self-contained replaceable cartridge.

Maximum upstream pressure: 16 bar
Medium temperature range: 5–60 °C
Adjustment pressure range: 1–6 bar



| Code | Connection | Notes | | |
|---|---|---|---|---|
| **554**040 | 1/2″ F | with pressure gauge connection 1/4″ F | 1 | - |
| **554**140 | 1/2″ F | with pressure gauge | 1 | - |
| **554**150 | 3/4″ F | with pressure gauge | 1 | - |

## Boiler filling loop



### 3006 ROBOFIL

Boiler filling loop.
Complete with:
- double check valve with shut-off valve;
- hose connection;
- shut-off valve.

Maximum working pressure: 10 bar
Medium temperature range: 2–95 °C
Length hose: 0,4 m
Material: dezincification resistant brass DR

| Code | | |
|---|---|---|
| **300**600 | 10 | - |

## Charging unit with CA type backflow preventer

### 573

Automatic charging unit with **CAa type backflow preventer** and shut-off valve.
Backflow preventer certified to EN 14367 standard.

Maximum working pressure: 10 bar
Medium temperature range: 5–65 °C
Adjustment pressure range: 0,2–4 bar



| Code | Connection | | |
|---|---|---|---|
| **573**001 | 1/2" F | 1 | 4 |

## Charging unit with BA type backflow preventer

### 574

Compact automatic charging unit with **BA type backflow preventer**, shut-off valve and strainer.
**With insulation**.
Backflow preventer conforming to EN 12729.

Maximum working pressure: 10 bar
Medium temperature range: 2–65 °C
Adjustment pressure range: 0,2–4 bar



| Code | Connection | | |
|---|---|---|---|
| **574**011 | 1/2" M | 1 | 5 |

### 574

Automatic charging unit with **BA type backflow preventer**, Y-strainer and shut-off valve.
Backflow preventer certified to EN 12729 standard.

Maximum working pressure: 10 bar
Medium temperature range: 5–65 °C
Adjustment pressure range: 0,2–4 bar



| Code | Connection | | |
|---|---|---|---|
| **574**000 | 1/2" F | 1 | - |

### 574

Automatic charging unit with **BA type backflow preventer**, Y-strainer and shut-off valve.
Backflow preventer certified to EN 12729 standard.

Maximum working pressure: 10 bar
Medium temperature range: 5–60 °C
Adjustment pressure range: 1–6 bar



| Code | Connection | | |
|---|---|---|---|
| **574**001 | 3/4" F | 1 | - |

## Compact charging unit with BA type backflow preventer



### 580

Automatic compact charging unit to EN 1717 standard with type backflow preventer, shut-off valve, strainer, pressure test ports for controlling the backflow preventer, pressure reducing valve.
For horizontal or vertical installations.
**With insulation**.
Backflow preventer certified to EN 12729 standard.
Pressure reducing valve certified to EN 1567 standard.
PATENT

Maximum working pressure: 10 bar
Medium temperature range: 5–65 °C
Material: brass
Adjustment pressure range: 0,8–4 bar

| Code | Connection | | |
|---|---|---|---|
| **580**011 | 1/2" M | 1 | 6 |



### 580

Automatic compact charging unit to EN 1717 standard with **BA type backflow preventer**, shut-off valve, strainer, pressure test ports for controlling the backflow preventer, pressure reducing valve.
For horizontal or vertical installations.
**With insulation**.
Backflow preventer conforming to EN 12729.
Pressure reducing valve certified to EN 1567 standard.
PATENT PENDING

Maximum working pressure: 10 bar
Medium temperature range: 2–65 °C
Material: dezincification resistant brass DR
Adjustment pressure range: 0,8–4 bar

| Code | Connection | | |
|---|---|---|---|
| **580**010 | 1/2" M | 1 | 5 |

Backflow prevention reference standards. To avoid water backflow from the heating system, which is polluted and hazardous for human health, it is indispensable to install an automatic charging unit with a backflow preventer. The correct use of hydraulic backflow preventers is governed by the European reference standard EN 1717 ("Protection against pollution of potable water in water installations and general requirements of devices to prevent pollution by backflow").

# ACCESSORIES FOR EXPANSION VESSELS

## Shut-off cocks for expansion vessels



### 558

Automatic shut-off cock, for expansion vessels. **For domestic water circuit.**

Maximum working pressure: 10 bar
Medium temperature range: 5–110 °C

| Code | Inlet connection | Outlet connection | | |
|---|---|---|---|---|
| **558**500 | 3/4" F | 3/4" M | 1 | 50 |



### 558

Automatic shut-off cock, for expansion vessel, with drain cock. **For domestic water circuit.**

Maximum working pressure: 6 bar
Medium temperature range: 5–85 °C

| Code | Inlet connection | Outlet connection | | |
|---|---|---|---|---|
| **558**510 | 3/4" F | 3/4" M | 1 | 50 |



### 5580

Ball shut-off valve, for expansion vessels, with drain cock. **For domestic water system.**

Maximum working pressure: 6 bar
Medium temperature range: 5–85 °C

| Code | Inlet connection | Outlet connection | | |
|---|---|---|---|---|
| **5580**50 | 3/4" F | 3/4" F | 1 | 20 |
| **5580**60 | 1" F | 1" F | 1 | 20 |
| **5580**70 | 1 1/4" F | 1 1/4" F | 1 | 20 |



### 5580

Ball shut-off valve for expansion vessels, with drain cock. **For solar thermal systems.**

Maximum working pressure: 6 bar
Medium temperature range: 5–120 °C
Medium: water, glycol solutions
Maximum percentage of glycol: 50 %

| Code | Connection | | |
|---|---|---|---|
| **5580**52 | 3/4" F | 1 | 20 |
| **5580**62 | 1" F | 1 | 20 |

# CONTROL DEVICES AND ACCESSORIES

## Air separators



### 547

Air separator.

Material: cast iron

| Code | Connection | | |
|---|---|---|---|
| **547**060 | 1″F | 1 | - |
| **547**070 | 1 1/4″F | 1 | - |
| **547**080 | 1 1/2″F | 1 | - |
| **547**090 | 2″F | 1 | - |
| **547**200 | 2 1/2″F | 1 | - |
| **547**300 | 3″F | 1 | - |



### 547

Air separator.
To be coupled with flat counterflanges EN 1092-1.

Material: steel
Finish: coated

| Code | Connection | | |
|---|---|---|---|
| **547**400 | DN 100 - PN 16 | 1 | - |
| **547**500 | DN 125 - PN 16 | 1 | - |

## Pressure and float switch



### 625

Safety pressure switch, with manual reset.

Maximum working pressure: 5 bar
Medium temperature range: 20–110 °C
Ambient temperature range: 0–50 °C
Protection class: IP 44
Contact rating (250 V): 16 (10) A

CE

| Code | Connection | Adjustment pressure range (bar) | | |
|---|---|---|---|---|
| **625**000 | 1/4″F | 2–4,5 | 1 | 10 |



### 625

Pressure switch for boosting sets and domestic water applications.

Medium temperature range: 0–55 °C
Ambient temperature range: 0–55 °C
Contact rating (up to 500V tripolar): 16 (10) A
Protection class: IP 44

CE

| Code | Connection | Maximum working pressure (bar) | Adjustment pressure range (bar) | | |
|---|---|---|---|---|---|
| **625**010 | 1/4″F | 12 | 3–12 | 1 | 10 |
| **625**005 | 1/4″F | 5 | 1–5 | 1 | 10 |



### 625

Minimum pressure safety switch, with manual reset.

Maximum working pressure: 5 bar
Medium temperature range: 20–110 °C
Ambient temperature range: 0–50 °C
Protection class: IP 44
Contact rating (250 V): 16 (10) A

CE

| Code | Connection | Adjustment pressure range (bar) | | |
|---|---|---|---|---|
| **625**100 | 1/4″F | 0,5–1,7 | 1 | 10 |



### 613

Float switch, 250 V 10 A.
Approved for heavy commissioning.

EAC 03

| Code | Probe/cable length (m) | | |
|---|---|---|---|
| **613**030 | 3 | 1 | 5 |
| **613**050 | 5 | 1 | 5 |

## Thermostats



### 621

Adjustable contact thermostat.

Adjustment temperature range: 20–90 °C
Protection class: IP 20

| Code | | |
|---|---|---|
| **621**000 | 1 | 10 |



### 622

Adjustable immersion thermostat.

Adjustment temperature range: 0–90 °C
Protection class: IP 40

| Code | | |
|---|---|---|
| **622**000 | 1 | 10 |



### 623

Double immersion thermostat.
Safety thermostat with manual reset:
- setting 100 °C (+0 °C -6 °C);
- setting 110 °C (+0 °C -6 °C).

Adjustment thermostat:
- temperature range: 0–90 °C;
- temperature range: 0–100 °C.

With 1/2" connection pocket.

Protection class: IP 40

| Code | Adjustment temperature (°C) | Double thermostat safety setting (°C) | | |
|---|---|---|---|---|
| **623**000 | 0–90 | 100 | 1 | 5 |
| **623**100 | 0–100 | 110 | 1 | 5 |



### 624

Immersion safety thermostat, with manual reset.
Setting:
100 °C (+0 °C -6 °C),
110 °C (+0 °C -6 °C).
With 1/2" connection pocket.

Protection class: IP 40

| Code | Temperature setting (°C) | | |
|---|---|---|---|
| **624**000 | 100 | 1 | 10 |
| **624**100 | 110 | 1 | 10 |



### 622

Pocket.
For 622 and 624 series.

| Code | | |
|---|---|---|
| **622**401 | 100 | - |



### 623

Pocket.
For 623 series.

| Code | | |
|---|---|---|
| **623**002 | 100 | - |



### 622

Stainless steel pocket for domestic application.
For thermostat code 622000.

Maximum working pressure: 10 bar
Medium temperature range: 0–100 °C

| Code | Connection | | |
|---|---|---|---|
| **622**010 | 1/2" M | 1 | - |

## Flow switches



### 315

Flow switch with magnetically operated contacts.

Maximum working pressure: 6 bar
Medium temperature range: -15–100 °C

| Code | Connection | Contact opening (decreasing flow) (l/h) | Contact closing (increasing flow) (l/h) | | |
|---|---|---|---|---|---|
| **315**400 | 1/2" M | 108 | 156 | 30 | - |
| **315**500 | 3/4" M | 348 | 456 | 30 | - |

An appropriate relais must be used in case of higher power consumption 0,02 A.



### 626

Flow switch.
For pipes from 1" to 8".

Maximum working pressure: 10 bar
Medium temperature range: -30–120 °C
Protection class: IP 54
Contact rating (250 V): 15 (5) A

| Code | Connection | | |
|---|---|---|---|
| **626**600 | 1" M | 1 | 5 |



### 626

Set of blades.

| Code | Article use | | |
|---|---|---|---|
| **626**009 | 626600 | 1 | - |

## Pressure gauges



### 557

Pressure gauge.

Accuracy class: Pressure gauge UNI 2,5
Medium temperature range: -20–90 °C

| Code | Connection | Pressure gauge scale (bar) | Ø (mm) | | |
|---|---|---|---|---|---|
| **557**104 | 1/4" M central back conn. | 0–4 | 50 | 1 | 20 |
| **557**106 | 1/4" M central back conn. | 0–6 | 50 | 1 | 20 |
| **557**204 | 1/4" M central back conn. | 0–4 | 50 | 1 | 20 |
| **557**304 | 1/4" M radial connection | 0–4 | 50 | 1 | 20 |
| **557**306 | 1/4" M radial connection | 0–6 | 50 | 1 | 20 |
| **557**310 | 1/4" M radial connection | 0–10 | 50 | 1 | 20 |
| **557**410 | 1/4" M central back conn. | 0–10 | 63 | 1 | 20 |
| **557**425 | 1/4" M central back conn. | 0–25 | 63 | 1 | 20 |
| **557**704 | 3/8" M radial connection | 0–4 | 80 | 1 | 50 |
| **557**706 | 3/8" M radial connection | 0–6 | 80 | 1 | 50 |
| **557**710 | 3/8" M radial connection | 0–10 | 80 | 1 | 50 |



### 5560

Pressure gauge for expansion vessel pressure test.

Accuracy class: Pressure gauge UNI 2,5, Temperature gauge UNI 2,5

| Code | Pressure gauge scale (bar) | | |
|---|---|---|---|
| **556000** | 0–10 | 1 | 10 |



### 689

Flow gauge.

Accuracy class: Pressure gauge UNI 2,5, Temperature gauge UNI 2,5
Ø: 80 mm
Medium temperature range: -20–90 °C

| Code | Connection | Flow gauge scale (m g.w.) | | |
|---|---|---|---|---|
| **689**010 | 3/8" M radial connection | 0–10 | 1 | 20 |
| **689**016 | 3/8" M radial connection | 0–16 | 1 | 20 |
| **689**025 | 3/8" M radial connection | 0–25 | 1 | 30 |

## Temperature gauges



### 692

Thermometer in sleeve.

Temperature gauge scale: 0–120 °C
Length pocket: 45 mm
Medium temperature range: 0–120 °C

| Code | Connection | | |
|---|---|---|---|
| **692**000 | 1/2" M | 1 | - |



### 693

Bulb thermometer.

Temperature gauge scale: 0–120 °C
Medium temperature range: 0–120 °C

| Code | | |
|---|---|---|
| **693**000 | 1 | - |



### 687

Temperature gauge for cooling.
With pocket.

Temperature gauge scale: -30–50 °C
Accuracy class: Temperature gauge UNI 2
Ø: 80 mm
Medium temperature range: -30–50 °C

| Code | Connection | Length pocket (mm) | | |
|---|---|---|---|---|
| **687**000 | 1/2" M central back conn. | 45 | 1 | 10 |
| **687**010 | 1/2" M central back conn. | 100 | 1 | 5 |



### 687

Temperature gauge for cooling systems.
With pocket.

Temperature gauge scale: -30–50 °C
Accuracy class: Temperature gauge UNI 2
Ø: 80 mm
Medium temperature range: -30–50 °C

| Code | Connection | Length pocket (mm) | | |
|---|---|---|---|---|
| **687**110 | 1/2" M radial connection | 100 | 1 | 10 |



### 688

Temperature gauge.
With pocket.

Temperature gauge scale: 0–120 °C
Accuracy class: Temperature gauge UNI 2
Ø: 80 mm
Medium temperature range: 0–120 °C

| Code | Connection | Notes | Length pocket | | |
|---|---|---|---|---|---|
| **688**000 | 1/2" M central back conn. | - | 45 mm | 1 | 10 |
| **688**010 | 1/2" M central back conn. | - | 100 mm | 1 | 5 |
| **688**011 | 1/2" M central back conn. | without pocket | - | 1 | 5 |



### 688

Temperature gauge.
With pocket.

Temperature gauge scale: 0–120 °C
Accuracy class: Temperature gauge UNI 2
Ø: 80 mm
Medium temperature range: 0–120 °C

| Code | Connection | Length pocket (mm) | | |
|---|---|---|---|---|
| **688**100 | 1/2" M radial connection | 45 | 1 | 10 |

## Temperature/pressure gauges



### 503

Temperature/pressure gauge.
With shut-off pocket.

Temperature gauge scale: 0–120 °C
Accuracy class: Temperature gauge UNI 2,
Pressure gauge UNI 2,5
Ø: 80 mm

| Code | Connection | Pressure gauge scale (bar) | | |
|---|---|---|---|---|
| **503**040 | 1/2" M central back conn. | 0–4 | 1 | 10 |
| **503**060 | 1/2" M central back conn. | 0–6 | 1 | 10 |



### 503

Temperature/pressure gauge.
With shut-off pocket.

Temperature gauge scale: 0–120 °C
Accuracy class: Pressure gauge UNI 2,5,
Temperature gauge UNI 2
Ø: 80 mm

| Code | Connection | Pressure gauge scale (bar) | | |
|---|---|---|---|---|
| **503**140 | 1/2" M radial connection | 0–4 | 1 | 20 |
| **503**160 | 1/2" M radial connection | 0–6 | 1 | 20 |

## Accessories



### 538

Drain cock with hose connection and cap.

Maximum working pressure: 10 bar
Medium temperature range: 5–110 °C

| Code | Connection | | |
|---|---|---|---|
| **538**201 | 1/4″ M | 1 | 100 |
| **538**400 | 1/2″ M | 1 | 100 |



### 538

Drain cock with hose connection and cap.
**Complete with manual lever**.

Maximum working pressure: 10 bar
Medium temperature range: 5–110 °C

| Code | Connection | | |
|---|---|---|---|
| **538**405 | 1/2″ M | 1 | 100 |



### 694

INAIL test pocket.

| Code | Pocket connection | Length pocket (mm) | | |
|---|---|---|---|---|
| **694**045 | 1/2″ M | 45 | 1 | 10 |
| **694**100 | 1/2″ M | 100 | 1 | 10 |



### 690

Three way tap for INAIL master pressure gauge. Conforms to INAIL standards (previously ISPESL).

Maximum working pressure: 15 bar
Medium temperature range: 5–90 °C

| Code | Connection 1 | Connection 2 | | |
|---|---|---|---|---|
| **690**200 | 1/4″ M | 1/4″ F | 5 | 50 |
| **690**300 | 3/8″ M | 3/8″ F | 5 | 50 |
| **690**400 | 1/2″ M | 1/2″ F | 5 | 50 |



### 691

Water hammer reducing loop.

Finish: chrome plated
Material: copper

| Code | Connection 1 | Connection 2 | | |
|---|---|---|---|---|
| **691**200 | 1/4″ M | 1/4″ F | 5 | - |
| **691**300 | 3/8″ M | 3/8″ F | 5 | - |
| **691**400 | 1/2″ M | 1/2″ F | 5 | - |

# STRAINERS

## Inspectable strainer with shut-off function



### 5771 NEW

Inspectable strainer with shut-off function.
**HEATING SYSTEMS APPLICATION:**
Maximum working pressure: 10 bar
Medium temperature range: 0–90 °C
Maximum percentage of glycol: 30 %
Medium: water, glycol solutions
**DOMESTIC WATER SYSTEMS APPLICATION:**
Maximum working pressure: 16 bar
Medium temperature range: 5–40 °C
PATENT PENDING

| Code | Connection | Strainer mesh size ∅ (mm) | Kv ($m^3/h$) | | |
|---|---|---|---|---|---|
| **5771**05 | 3/4″F | 0,16 | 5,5 | 1 | 12 |
| **5771**06 | 1″F | 0,16 | 5,5 | 1 | 12 |

**Operation**

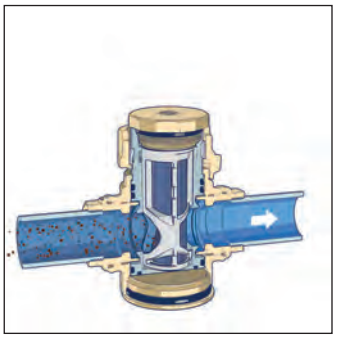

**Shut-off**

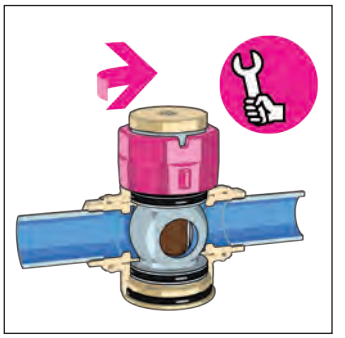

**Discharge**

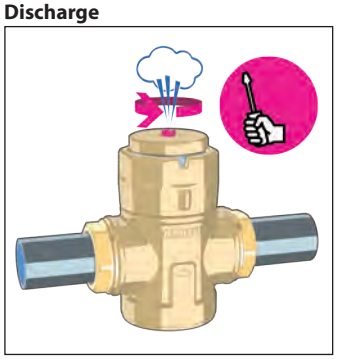

**Cap removal**

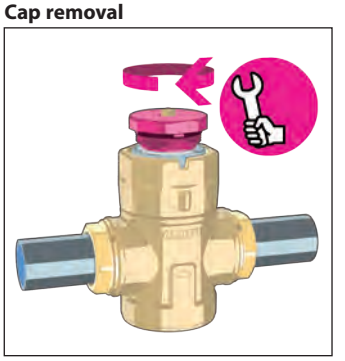

**Mesh extraction**

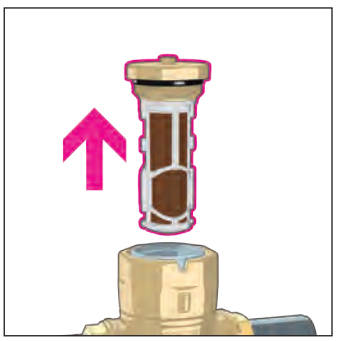

**Mesh cleaning**

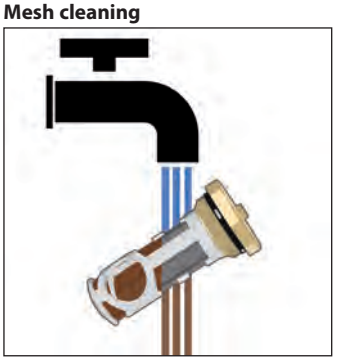

## Threaded filters for domestic hot water/heating systems



### 577

Y-strainer.
Filtering mesh in stainless steel AISI 304.

Medium temperature range: -20–110 °C
Maximum percentage of glycol: 30 %
Medium: water, glycol solutions
Material: bronze

| Code | Connection | Strainer mesh size ∅ (mm) | Kv ($m^3/h$) | PN | | |
|---|---|---|---|---|---|---|
| **577**004 | 1/2″F | 0,40 | 2,5 | PN 16 | 1 | 50 |
| **577**005 | 3/4″F | 0,40 | 3,9 | PN 16 | 1 | - |
| **577**006 | 1″F | 0,40 | 7 | PN 16 | 1 | 25 |
| **577**007 | 1 1/4″F | 0,47 | 16 | PN 16 | 1 | 25 |
| **577**008 | 1 1/2″F | 0,47 | 24 | PN 16 | 1 | - |
| **577**009 | 2″F | 0,53 | 35 | PN 16 | 1 | - |
| **577**020 | 2 1/2″F | 0,53 | 57 | PN 10 | 1 | - |
| **577**030 | 3″F | 0,53 | 73 | PN 10 | 1 | - |

## Flanged filters for heating systems



### 579

Y strainer for heating systems.
Ductile cast iron body, blue epoxy coating.
With drain cock.
Filtering mesh in stainless steel AISI 304.
To be coupled with flat counterflanges EN 1092-1.

Maximum working pressure: 16 bar
Medium temperature range: -10–110 °C
Nominal pressure: PN 16
Maximum percentage of glycol: 50 %
Medium: water, glycol solutions
Material: cast iron

| Code | Connection | Strainer mesh size ∅ (mm) | Kv ($m^3/h$) | | |
|---|---|---|---|---|---|
| **579**051 | DN 50 - PN 16 | 1 | 28 | 1 | - |
| **579**061 | DN 65 - PN 16 | 1 | 37,2 | 1 | - |
| **579**081 | DN 80 - PN 16 | 1 | 62,2 | 1 | - |
| **579**101 | DN 100 - PN 16 | 1,6 | 149 | 1 | - |
| **579**121 | DN 125 - PN 16 | 1,6 | 320 | 1 | - |
| **579**151 | DN 150 - PN 16 | 1,6 | 367 | 1 | - |
| **579**201 | DN 200 - PN 16 | 1,6 | 652 | 1 | - |
| **579**251 | DN 250 - PN 16 | 2 | 844 | 1 | - |

DN 125, DN 150, DN 200, DN 250 with rhomboidal reinforcing mesh.

More filters for plumbing systems on page 233

# HYDRAULIC SEPARATORS

## Standard hydraulic separator



### 548

Hydraulic separator.
Complete with:
- air vent with automatic shut-off cock;
- drain cock with hose connection.

**With insulation**.

Maximum working pressure: 10 bar
Medium temperature range: 0–110 °C
Material: steel
Finish: coated

| Code | Connection | Max. recommended flow rate ($m^3/h$) | | |
|---|---|---|---|---|
| **548**006 | 1″ F | 2,5 | 1 | - |
| **548**007 | 1 1/4″ F | 4 | 1 | - |
| **548**008 | 1 1/2″ F | 6 | 1 | - |
| **548**009 | 2″ F | 8,5 | 1 | - |



### 548

Hydraulic separator.
Temperature probe connection: 1/2″ F.
To be coupled with flat counterflanges EN 1092-1.
Complete with:
- automatic air vent;
- shut-off valve;
- drain valve.

**With insulation**.

Maximum working pressure: 10 bar
Material: steel
Finish: coated

| Code | Connection | Max. recommended flow rate ($m^3/h$) | Medium temperature range (°C) | | |
|---|---|---|---|---|---|
| **548**052 | DN 50 - PN 16 | 9 | 0–105 | 1 | - |
| **548**062 | DN 65 - PN 16 | 18 | 0–105 | 1 | - |
| **548**082 | DN 80 - PN 16 | 28 | 0–105 | 1 | - |
| **548**102 | DN 100 - PN 16 | 56 | 0–105 | 1 | - |
| **548**122 | DN 125 - PN 16 | 75 | 0–100 | 1 | - |
| **548**152 | DN 150 - PN 16 | 110 | 0–100 | 1 | - |



### 548

Hydraulic separator.
Temperature probe connection: 1/2″ F.
To be coupled with flat counterflanges EN 1092-1.
Complete with:
- automatic air vent;
- shut-off valve;
- drain valve.

Maximum working pressure: 10 bar
Medium temperature range: 0–110 °C
Material: steel
Finish: coated

| Code | Connection | Max. recommended flow rate ($m^3/h$) | | |
|---|---|---|---|---|
| **548**200 | DN 200 - PN 10 | 180 | 1 | - |
| **548**250 | DN 250 - PN 10 | 300 | 1 | - |
| **548**300 | DN 300 - PN 10 | 420 | 1 | - |

The hydraulic separator should be sized according to the maximum flow rate value at the inlet. The selected design value must be the greatest between the primary circuit and the secondary circuit.

## Multifunction hydraulic separator



### 5495 SEP4

Multifunction hydraulic separator.
Complete with:
- hydraulic separator;
- automatic air vent;
- dirt separator;
- magnetic ring;
- drain cock with hose connection.

**With insulation**.

Maximum working pressure: 10 bar
Medium temperature range: 0–100 °C
Material: steel
Finish: coated

| Code | Connection | Max. recommended flow rate ($m^3/h$) | | |
|---|---|---|---|---|
| **5495**06 | 1″ F | 2,5 | 1 | - |
| **5495**07 | 1 1/4″ F | 4 | 1 | - |
| **5495**08 | 1 1/2″ F | 6 | 1 | - |
| **5495**09 | 2″ F | 8,5 | 1 | - |

# HYDRAULIC SEPARATORS-MANIFOLDS

## SEPCOLL - outlet centre distance 90 mm

### 559 SEPCOLL

Hydraulic separator-manifold for **heating and cooling systems**.
2+1 outlets.
Complete with mounting brackets.
**With insulation**.

Medium temperature range: 0–100 °C
Nominal pressure: PN 6
Material: steel
Outlet centre distance: 90 mm



| Code | Main connection | Outlet connection | Side connection | | |
|---|---|---|---|---|---|
| **559**021 | 1″F | 1″M - 2 out. | 1″F | 1 | - |

### 559 SEPCOLL

Hydraulic separator-manifold for **heating and cooling systems**.
2+2 outlets.
Complete with mounting brackets.
**With insulation**.

Medium temperature range: 0–100 °C
Nominal pressure: PN 6
Material: steel
Outlet centre distance: 90 mm



| Code | Main connection | Outlet connection | | |
|---|---|---|---|---|
| **559**022 | 1 1/4″F | 1″M - 4 out. | 1 | - |

### 559 SEPCOLL

Hydraulic separator-manifold for **heating and cooling systems**.
3+1 outlets.
Complete with mounting brackets.
**With insulation**.

Medium temperature range: 0–100 °C
Nominal pressure: PN 6
Material: steel
Outlet centre distance: 90 mm



| Code | Main connection | Outlet connection | | |
|---|---|---|---|---|
| **559**031 | 1 1/4″F | 1″M - 4 out. | 1 | - |

**Hydraulic connections**

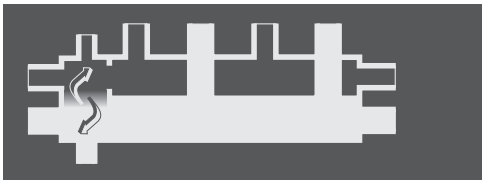

**559**021

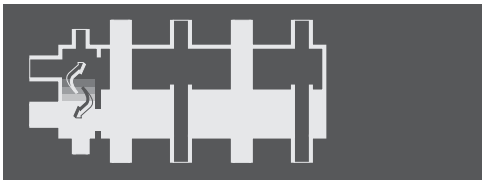

**559**022

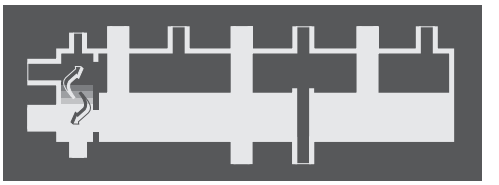

**559**031

| **Maximum recommended flow rate at inlets of SEPCOLL separator 559 series** | | |
|---|---|---|
| Outlets | Primary | Secondary (total) |
| 2+1 / 2 | 2 m³/h | 5 m³/h |
| 2+2 | 2,5 m³/h | 6 m³/h |
| 3+1 | 2,5 m³/h | 6 m³/h |

## SEPCOLL - outlet centre distance 125 mm

### 559 SEPCOLL

Hydraulic separator-manifold for **heating and cooling systems**.
2 outlets.
Complete with mounting brackets.
**With insulation**.

Medium temperature range: 0–110 °C
Nominal pressure: PN 6
Material: steel
Outlet centre distance: 125 mm



| Code | Main connection | Outlet connection | | |
|---|---|---|---|---|
| **559**220 | 1″F | 1 1/2″F - 2 out., captive nut | 1 | - |

### 559 SEPCOLL

Hydraulic separator-manifold for **heating and cooling systems**.
2+1 outlets.
Complete with mounting brackets.
**With insulation**.

Medium temperature range: 0–110 °C
Nominal pressure: PN 6
Material: steel
Outlet centre distance: 125 mm



| Code | Main connection | Outlet connection | Side connection | | |
|---|---|---|---|---|---|
| **559**221 | 1″F | 1 1/2″F - 2 out., captive nut | 1″F - 1 out. | 1 | - |

### 559 SEPCOLL

Hydraulic separator-manifold for **heating and cooling systems**.
2+2 outlets.
Complete with mounting brackets.
**With insulation**.

Medium temperature range: 0–110 °C
Nominal pressure: PN 6
Material: steel
Outlet centre distance: 125 mm



| Code | Main connection | Outlet connection | | |
|---|---|---|---|---|
| **559**222 | 1 1/4″F | 1 1/2″F - 4 out., captive nut | 1 | - |

### 559 SEPCOLL

Hydraulic separator-manifold for **heating and cooling systems**.
3+1 outlets.
Complete with mounting brackets.
**With insulation**.

Medium temperature range: 0–110 °C
Nominal pressure: PN 6
Material: steel
Outlet centre distance: 125 mm



| Code | Main connection | Outlet connection | | |
|---|---|---|---|---|
| **559**231 | 1 1/4″F | 1 1/2″F - 4 out., captive nut | 1 | - |

**Hydraulic connections**



**559**220

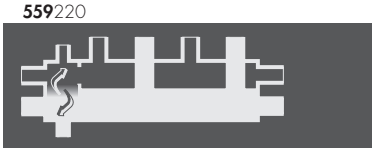

**559**221

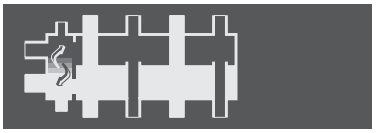

**559**222

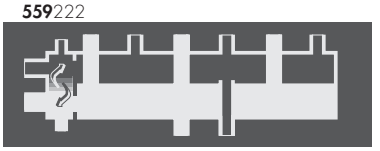

**559**231

## Accessories for SEPCOLL



### 559

Pair of plugs with gaskets for unused outlets.
For 559 and 550 series with 125 mm centre distance.

| Code | Connection | | |
|---|---|---|---|
| **559**001 | 1 1/2″M | 1 | - |



### 559

Pocket with magnetic insert.
For 559 series.

| Code | Connection | | |
|---|---|---|---|
| **559**003 | 1/2″M | 1 | - |

# Compact manifolds for central heating system DN 25

## 550

Manifold for **heating and cooling systems**.
2 outlets.
Complete with steel mounting brackets.
**With insulation**.

Outlet centre distance: 125 mm
Maximum recommended flow rate: 4 m³/h
Maximum working pressure: 6 bar
Medium temperature range: 5–110 °C
Material: steel



| Code | Main connection | Outlet connection | | |
|---|---|---|---|---|
| **550**220 | 1 1/2" M | 1 1/2" F - 2 out., captive nut | 1 | - |

## 550

Manifold for **heating and cooling systems**.
2+1 outlets.
Complete with steel mounting brackets.

**With insulation**.

Outlet centre distance: 125 mm
Maximum recommended flow rate: 4 m³/h
Maximum working pressure: 6 bar
Medium temperature range: 5–110 °C
Material: steel



| Code | Main connection | Outlet connection | | |
|---|---|---|---|---|
| **550**221 | 1 1/2" M | 1 1/2" F - 3 out., captive nut | 1 | - |

## 550

Manifold for **heating and cooling systems**.
3 outlets.
Complete with steel mounting brackets.
**With insulation**.

Outlet centre distance: 125 mm
Maximum recommended flow rate: 4 m³/h
Maximum working pressure: 6 bar
Medium temperature range: 5–110 °C
Material: steel



| Code | Main connection | Outlet connection | | |
|---|---|---|---|---|
| **550**230 | 1 1/2" M | 1 1/2" F - 3 out., captive nut | 1 | - |

## 550

Manifold for **heating and cooling systems**.
4 outlets.
Complete with steel mounting brackets.
**With insulation**.

Outlet centre distance: 125 mm
Maximum recommended flow rate: 4 m³/h
Maximum working pressure: 6 bar
Medium temperature range: 5–110 °C
Material: steel



| Code | Main connection | Outlet connection | | |
|---|---|---|---|---|
| **550**240 | 1 1/2" M | 1 1/2" F - 4 out., captive nut | 1 | - |

## 550 NEW

Manifold for **heating and cooling systems**.
5 outlets.
Complete with steel mounting brackets.
**With insulation**.

Outlet centre distance: 125 mm
Maximum recommended flow rate: 4 m³/h
Maximum working pressure: 6 bar
Medium temperature range: 5–110 °C
Material: steel



| Code | Main connection | Outlet connection | | |
|---|---|---|---|---|
| **550**250 | 1 1/2" M | 1 1/2" M - 5 out., captive nut | 1 | - |

## 550

Hydraulic separator for **heating and cooling systems**.
For manifolds 550 series DN 25.
**With insulation**.

Outlet centre distance: 125 mm
Maximum recommended flow rate: 4 m³/h
Maximum working pressure: 6 bar
Medium temperature range: 5–110 °C
Material: steel



| Code | Main connection | Outlet connection | | |
|---|---|---|---|---|
| **550**205 | 1 1/2" M | 1 1/2" F - 1 out., captive nut | 1 | - |

# MANIFOLDS FOR CENTRAL HEATING SYSTEM

## Compact manifolds for central heating system DN 32

### 550

Manifold for **heating and cooling systems**.
2 outlets.
Complete with steel mounting brackets.
**With insulation**.

Outlet centre distance: 125 mm
Maximum recommended flow rate: 9 m³/h
Maximum working pressure: 6 bar
Medium temperature range: 5–110 °C
Material: steel



| Code | Main connection | Outlet connection | | |
|---|---|---|---|---|
| **550**320 | 2″ M | 1 1/2″ F - 2 out., captive nut | 1 | - |

### 550

Manifold for **heating and cooling systems**.
3 outlets.
Complete with steel mounting brackets.
**With insulation**.

Outlet centre distance: 125 mm
Maximum recommended flow rate: 9 m³/h
Maximum working pressure: 6 bar
Medium temperature range: 5–110 °C
Material: steel



| Code | Main connection | Outlet connection | | |
|---|---|---|---|---|
| **550**330 | 2″ M | 1 1/2″ F - 3 out., captive nut | 1 | - |

### 550

Manifold for **heating and cooling systems**.
4 outlets.
Complete with steel mounting brackets.
**With insulation**.

Outlet centre distance: 125 mm
Maximum recommended flow rate: 9 m³/h
Maximum working pressure: 6 bar
Medium temperature range: 5–110 °C
Material: steel



| Code | Main connection | Outlet connection | | |
|---|---|---|---|---|
| **550**340 | 2″ M | 1 1/2″ F - 4 out., captive nut | 1 | - |

### 550 NEW

Manifold for **heating and cooling systems**.
5 outlets.
Complete with steel mounting brackets.
**With insulation**.

Outlet centre distance: 125 mm
Maximum recommended flow rate: 9 m³/h
Maximum working pressure: 6 bar
Medium temperature range: 5–110 °C
Material: steel



| Code | Main connection | Outlet connection | | |
|---|---|---|---|---|
| **550**350 | 2″ M | 2″ M - 5 out., captive nut | 1 | - |

### 550

Hydraulic separator for **heating and cooling systems**.
For manifolds 550 series DN 32.
**With insulation**.



Outlet centre distance: 125 mm
Maximum recommended flow rate: 9 m³/h
Maximum working pressure: 6 bar
Medium temperature range: 5–110 °C
Material: steel

| Code | Main connection | Outlet connection | | |
|---|---|---|---|---|
| **550**305 | 2″ M | 2″ F - 1 out., captive nut | 1 | - |

### 559

Pair of plugs with gaskets for unused outlets.
For 559 and 550 series with 125 mm centre distance.



| Code | Connection | | |
|---|---|---|---|
| **559**001 | 1 1/2″ M | 1 | - |

### 559

Pair of fittings with gaskets.
For 559 and 550 series with 125 mm outlet centre distance.



| Code | Connection 1 | Connection 2 | | |
|---|---|---|---|---|
| **559**002 | 1 1/2″ M | 1″ M | 1 | - |

# Standard manifolds for central heating system

## 550 (KIT)

Manifold for **heating and cooling systems**.
2 outlets.

Outlet centre distance: 125 mm
Maximum working pressure: 10 bar
Medium temperature range: 5–110 °C
Material: steel



| Code | Main connection | Outlet connection | | |
|---|---|---|---|---|
| **550**020 | 1 1/4″ M | 1 1/2″ F - 2 out., captive nut | 1 | - |

## 550 (KIT)

Manifold for **heating and cooling systems**.
2+1 outlets.

Outlet centre distance: 125 mm
Maximum working pressure: 10 bar
Medium temperature range: 5–110 °C
Material: steel



| Code | Main connection | Outlet connection | | |
|---|---|---|---|---|
| **550**021 | 1 1/4″ M | 1 1/2″ F - 3 out., captive nut | 1 | - |

## 550 (KIT)

Manifold for **heating and cooling systems**.
3 outlets.

Outlet centre distance: 125 mm
Maximum working pressure: 10 bar
Medium temperature range: 5–110 °C
Material: steel



| Code | Main connection | Outlet connection | | |
|---|---|---|---|---|
| **550**030 | 1 1/2″ M | 1 1/2″ F - 3 out., captive nut | 1 | - |

## 550 (KIT)

Manifold for **heating and cooling systems**.
3+1 outlets.

Outlet centre distance: 125 mm
Maximum working pressure: 10 bar
Medium temperature range: 5–110 °C
Material: steel



| Code | Main connection | Outlet connection | | |
|---|---|---|---|---|
| **550**031 | 1 1/2″ M | 1 1/2″ F - 4 out., captive nut | 1 | - |

## 550 (KIT)

Manifold for **heating and cooling systems**.
4 outlets.

Outlet centre distance: 125 mm
Maximum working pressure: 10 bar
Medium temperature range: 5–110 °C
Material: steel



| Code | Main connection | Outlet connection | | |
|---|---|---|---|---|
| **550**040 | 1 1/2″ M | 1 1/2″ F - 4 out., captive nut | 1 | - |



## 550

Insulation for manifolds for central heating system 550 series.
For **heating and cooling systems**.

| Code | Notes | Article use | | |
|---|---|---|---|---|
| CBN550020 | for manifold 2 | 550020 | 1 | - |
| CBN550021 | for manifold 2+1 | 550021 | 1 | - |
| CBN550030 | for manifold 3 | 550030 | 1 | - |
| CBN550031 | for manifold 3+1 | 550031 | 1 | - |
| CBN550040 | for manifold 4 | 550040 | 1 | - |



## 550

Kit for 550 series manifold pipe connection to 548 series hydraulic separator.

| Code | Primary connection | Manifold connection | | |
|---|---|---|---|---|
| **550**001 | 1 1/4″ M | 1 1/4″ F | 1 | - |
| **550**002 | 1 1/2″ M | 1 1/4″ F | 1 | - |
| **550**003 | 1 1/2″ M | 1 1/2″ F | 1 | - |
| **550**004 | 2″ M | 1 1/2″ F | 1 | - |



## 559

Pair of plugs with gaskets for unused outlets.
For 559 and 550 series with 125 mm centre distance.

| Code | Connection | | |
|---|---|---|---|
| **559**001 | 1 1/2″ M | 1 | - |



## 559

Pair of fittings with gaskets.
For 559 and 550 series with 125 mm outlet centre distance.

| Code | Connection 1 | Connection 2 | | |
|---|---|---|---|---|
| **559**002 | 1 1/2″ M | 1″ M | 1 | - |

**(KIT)** with optional insulation kit

# SUPPLY UNITS

## Direct supply units

### DN 25



**165**

Direct supply unit **DN 25**, for **heating and cooling systems**.
**Right - left convertible**.
**With insulation**.

Maximum working pressure: 10 bar
Medium temperature range: 5–100 °C
Electric supply: 230 V AC
Outlet centre distance: 125 mm
Type of pump: UPM3K Auto 25-70

CE

| Code | System side connection | Boiler side connection | Flow rate avail. head 4 m.c.a. ($m^3/h$) | | |
|---|---|---|---|---|---|
| **165**600A2L | 1″F | 1 1/2″M | 1,6 | 1 | - |



**165**

Direct supply unit **DN 25**, for **heating and cooling systems**.
**Right - left convertible**.
**With insulation**.

Maximum working pressure: 10 bar
Medium temperature range: 5–100 °C
Electric supply: 230 V AC
Outlet centre distance: 125 mm
Type of pump: Para 25-7

CE

| Code | System side connection | Boiler side connection | Flow rate avail. head 4 m.c.a. ($m^3/h$) | | |
|---|---|---|---|---|---|
| **165**640HE3 | 1″F | 1 1/2″M | 1,6 | 1 | - |



**165**

Direct supply unit **DN 25**, for **heating and cooling systems**.
**Right - left convertible**.
**With insulation**.

Maximum working pressure: 10 bar
Medium temperature range: 5–100 °C
Electric supply: 230 V AC
Outlet centre distance: 125 mm
Type of pump: EVOSTA2 70/130

CE

| Code | System side connection | Boiler side connection | Flow rate avail. head 4 m.c.a. ($m^3/h$) | | |
|---|---|---|---|---|---|
| **165**640HE5 | 1″F | 1 1/2″M | 1,6 | 1 | - |

### DN 32



**165**

Direct supply unit **DN 32**, for **heating systems**.
**Right - left convertible**.
**With insulation**.

Maximum working pressure: 10 bar
Medium temperature range: 5–100 °C
Electric supply: 230 V AC
Outlet centre distance: 125 mm
Type of pump: UPML 25-105

CE

| Code | System side connection | Boiler side connection | Flow rate avail. head 4 m.c.a. ($m^3/h$) | | |
|---|---|---|---|---|---|
| **165**601UPM | 1 1/4″F | 1 1/2″M | 3,4 | 1 | - |



**165**

Direct supply unit **DN 32**, for **heating and cooling systems**.
**Right - left convertible**.
**With insulation**.

Maximum working pressure: 10 bar
Medium temperature range: 5–100 °C
Electric supply: 230 V AC
Outlet centre distance: 125 mm
Type of pump: Para 25-9

CE

| Code | System side connection | Boiler side connection | Flow rate avail. head 4 m.c.a. ($m^3/h$) | | |
|---|---|---|---|---|---|
| **165**641HE4 | 1 1/4″F | 1 1/2″M | 2,7 | 1 | - |

For distribution units fitted for heat metering, refer to Section 12

# Thermostatic regulating units

## DN 25



### 166

Direct supply unit **DN 25**, for **heating systems**.
**Right - left convertible**.
**With insulation**.

Maximum working pressure: 10 bar
Medium temperature range: 5–100 °C
Electric supply: 230 V AC
Outlet centre distance: 125 mm
Type of pump: UPM3K Auto 25-70

CE

| Code | System side connection | Boiler side connection | Adjustment temperature (°C) | Flow rate avail. head 4 m.c.a. ($m^3/h$) | | |
|---|---|---|---|---|---|---|
| **166**600A2L | 1″F | 1 1/2″M | 25–50 | 1,4 | 1 | - |
| **166**605A2L | 1″F | 1 1/2″M | 40–70 | 1,4 | 1 | - |



### 166

Direct supply unit **DN 25**, for **heating systems**.
**Right - left convertible**.
**With insulation**.

Maximum working pressure: 10 bar
Medium temperature range: 5–100 °C
Electric supply: 230 V AC
Outlet centre distance: 125 mm
Type of pump: Para 25-7

CE

| Code | System side connection | Boiler side connection | Adjustment temperature (°C) | Flow rate avail. head 4 m.c.a. ($m^3/h$) | | |
|---|---|---|---|---|---|---|
| **166**600HE3 | 1″F | 1 1/2″M | 25–50 | 1,4 | 1 | - |



### 166

Thermostatic regulating unit for **heating systems**, **DN 25**.
**Right - Left convertible**.
**With insulation**.

Maximum working pressure: 10 bar
Medium temperature range: 5–100 °C
Electric supply: 230 V AC
Outlet centre distance: 125 mm
Type of pump: EVOSTA2 70/130

CE

| Code | System side connection | Boiler side connection | Adjustment temperature | Flow rate avail. head 4 m.c.a. ($m^3/h$) | | |
|---|---|---|---|---|---|---|
| **166**600HE5 | 1″F | 1 1/2″M | 25–50 | 1,4 | 1 | - |

## DN 32



### 166

Direct supply unit **DN 32**, for **heating systems**.
**Right - left convertible**.
**With insulation**.

Maximum working pressure: 10 bar
Medium temperature range: 5–100 °C
Electric supply: 230 V AC
Outlet centre distance: 125 mm
Type of pump: UPML 25-105

CE

| Code | System side connection | Boiler side connection | Adjustment temperature (°C) | Flow rate avail. head 4 m.c.a. ($m^3/h$) | | |
|---|---|---|---|---|---|---|
| **166**601UPM | 1 1/4″F | 1 1/2″M | 25–50 | 2,4 | 1 | - |

# Motorised regulating units

## DN 25



### 167

Motorised regulating unit **DN 25**, for **heating and cooling systems**.
**Right - left convertible**.
Available with three-point control signal actuator (note A) or 0(2)–10V control signal and 0–10V feedback signal (note B).
Regulation with sector three-way valve.
**With insulation**.

Maximum working pressure: 10 bar
Medium temperature range: 5–100 °C
Outlet centre distance: 125 mm
Type of pump: UPM3K Auto 25-70

CE

| Code | System side connection | Boiler side connection | Electric supply | Flow rate avail. head 4 m.c.a. ($m^3/h$) | Notes | | |
|---|---|---|---|---|---|---|---|
| **167**652HE1 | 1″F | 1 1/2″M | 230 V AC | 1,4 | **A** | 1 | - |
| **167**654HE1 | 1″F | 1 1/2″M | 24 V AC | 1,4 | **B** | 1 | - |



### 167

Motorised regulating unit **DN 25**, for **heating and cooling systems**.
**Right - left convertible**.
Available with three-point control signal actuator (note A) or 0(2)–10V control signal and 0–10V feedback signal (note B).
Regulation with three-way sector valve.
**With insulation**.

Maximum working pressure: 10 bar
Medium temperature range: 5–100 °C
Outlet centre distance: 125 mm
Type of pump: Para 25-7

CE

| Code | System side connection | Boiler side connection | Electric supply | Flow rate avail. head 4 m.c.a. ($m^3/h$) | Notes | | |
|---|---|---|---|---|---|---|---|
| **167**652HE3 | 1″F | 1 1/2″M | 230 V AC | 1,4 | **A** | 1 | - |
| **167**654HE3 | 1″F | 1 1/2″M | 24 V AC | 1,4 | **B** | 1 | - |

## DN 32



### 167

Motorised regulating unit **DN 32**, for **heating systems**.
**Right - left convertible**.
Available with three-point control signal actuator (note A) or 0(2)–10V control signal and 0–10V feedback signal (note B).
Regulation with three-way sector valve.
**With insulation**.

Maximum working pressure: 10 bar
Medium temperature range: 5–100 °C
Outlet centre distance: 125 mm
Type of pump: UPML 25-105

CE

| Code | System side connection | Boiler side connection | Electric supply | Flow rate avail. head 4 m.c.a. ($m^3/h$) | Notes | | |
|---|---|---|---|---|---|---|---|
| **167**662HE2 | 1 1/4″F | 1 1/2″M | 230 V AC | 3,7 | **A** | 1 | - |
| **167**664HE2 | 1 1/4″F | 1 1/2″M | 24 V AC | 3,7 | **B** | 1 | - |



### 167

Motorised regulating unit **DN 32**, for **heating and cooling systems**.
**Right - left convertible**.
Available with three-point control signal actuator (note A) or 0(2)–10V control signal and 0–10V feedback signal (note B).
Regulation with three-way sector valve.
**With insulation**.

Maximum working pressure: 10 bar
Medium temperature range: 5–100 °C
Outlet centre distance: 125 mm
Type of pump: Para 25-9

CE

| Code | System side connection | Boiler side connection | Electric supply | Flow rate avail. head 4 m.c.a. ($m^3/h$) | Notes | | |
|---|---|---|---|---|---|---|---|
| **167**662HE4 | 1 1/4″F | 1 1/2″M | 230 V AC | 2,2 | **A** | 1 | - |
| **167**664HE4 | 1 1/4″F | 1 1/2″M | 24 V AC | 2,2 | **B** | 1 | - |

**Note A: three-point control signal actuator**.
Operating time: 150 s.
Can be combined with regulators code 161010 and 1520 series.

**Note B: 0(2)–10 V control signal actuator**.
Feedback signal: 0–10 V.
Operating time: 75 s.
Can be combined with regulator code 161010 (for actuator electic supply use 230V / 24V transformer).

## Accessories for units



### 165

Hydraulic separator kit for units 165, 166 and 167 series.
DN 25.

| Code | Inlet connection | Outlet connection | | |
|---|---|---|---|---|
| **165**010 | 1 1/2″F captive nut | 1″F | 1 | - |



### 519

Differential by-pass valve.
For 165, 166 and 167 series units.

Maximum working pressure: 10 bar
Medium temperature range: 5–100 °C
Setting range: 1–6 m g.w.

| Code | Connection | | |
|---|---|---|---|
| **519**006 | 1″M | 1 | 50 |



### 165 NEW

Pump anti-seizing electronic controller.

Electric supply: 230 V AC
Protection class: IP 54
Maximum current: 1 A

CE

| Code | | |
|---|---|---|
| **165**011 | 1 | - |



### 165

Pair of eccentric tailpieces for units 165, 166 and 167 series.

Outlet centre distance: 105-145 mm

| Code | Connection 1 | Connection 2 | | |
|---|---|---|---|---|
| **165**006 | 1″F | 1 1/2″F captive nut | 1 | - |



### 165

Sensor holder extension.
For 165, 166 and 167 series units.
Side connections: M4 F x M4 F x 1/8″ F x 1/4″ F.

| Code | Connection 1 | Connection 2 | | |
|---|---|---|---|---|
| **165**003 | 1″M | 1″F captive nut | 1 | - |



### 165

Female union with captive nut.
Complete with gasket.
For 165, 166 and 167 series units.

| Code | Connection 1 | Connection 2 | | |
|---|---|---|---|---|
| **165**002 | 1″F | 1 1/2″F captive nut | 1 | - |



### 165

Mounting bracket in stainless steel for units 165, 166 and 167 series.
For heating only.

| Code | Notes | | |
|---|---|---|---|
| **165**001 | wall bracket | 1 | - |



### 165

Safety thermostat kit for units 165, 166 and 167 series.
Complete with cable.
M4 connection.
Setting accuracy: ± 3

Protection class: IP 65

| Code | Notes | Temperature setting (°C) | | |
|---|---|---|---|---|
| **165**004 | maximum safety thermostat | 55 | 1 | - |
| **165**007 | minimum safety thermostat | 10 | 1 | - |

## Spare parts for regulating units



Spare pump UPM3S Auto 25-60.
Complete with supply cable.

Outlet centre distance: 130 mm

| Code | Type of pump | | |
|---|---|---|---|
| F0001252 | UPM3S Auto 25-60 | 1 | - |



Spare pump UPML 25-105.
Complete with supply cable.

Outlet centre distance: 130 mm

| Code | Type of pump | | |
|---|---|---|---|
| F19486 | UPML 25-105 | 1 | - |



Spare pump PARA 25/7.
Complete with supply cable.

Outlet centre distance: 130 mm

| Code | Type of pump | | |
|---|---|---|---|
| F19441 | Para 25-7 | 1 | - |



Spare pump PARA 25/9.
Complete with supply cable.

Outlet centre distance: 130 mm

| Code | Type of pump | | |
|---|---|---|---|
| F0001584 | Para 25-9 | 1 | - |



NEW

UPM3K Auto 25-70 spare part.
Complete with supply cable.

Outlet centre distance: 130 mm

| Code | Type of pump | | |
|---|---|---|---|
| F0002445 | UPM3K Auto 25-70 | 1 | - |



Spare pump EVOSTA2 70/130 .
Complete with supply cable.

Outlet centre distance: 130 mm

| Code | Type of pump | | |
|---|---|---|---|
| F0002041 | EVOSTA2 70/130 | 1 | - |



## 166

Thermostatic mixing valve.
**For 166 series units.**

Maximum working pressure: 10 bar
Medium temperature range: 5–110 °C
Kv: 4,1 $m^3/h$

| Code | System side connection | Connection | Mixed connection | DN | Adjustment temperature (°C) | | |
|---|---|---|---|---|---|---|---|
| **166**001 | 1 1/2" M | 1 1/4" M | 1 1/2" F captive nut | DN 20 | 25–50 | 1 | - |
| **166**005 | 1 1/2" M | 1 1/4" M | 1 1/2" F captive nut | DN 20 | 40–70 | 1 | - |



Three-way sector mixing valve, threaded.
**For 167 series units.**

Maximum working pressure: 10 bar
Medium temperature range: 5–110 °C
Nominal pressure: PN 10
△p max.: 1 bar
Material: brass

| Code | Article use | Kv ($m^3/h$) | | |
|---|---|---|---|---|
| F0001334 | 167652HE1, 167654HE1, 167652HE3, 167654HE3 | 6,3 | 1 | - |
| F0001335 | 167662HE2, 167664HE2, 167662HE4, 167664HE4 | 10,0 | 1 | - |



## 6370

Actuator for sector mixing valve, **three-point control**.
For mixing valves codes 61000 from 1/2" to 2" and for unit 167 series.
Actuator torque 5 N·m.

Ambient temperature range: 0–55 °C
Protection class: IP 44
Supply cable length: 1,5 m

CE

| Code | Electric supply | Operating time (s) | Rotation | | |
|---|---|---|---|---|---|
| **6370**42 | 230 V AC | 150 | 90° | 1 | - |



## 6370

Actuator for sector mixing valve, **proportional control**.
For mixing valves codes 61000 from 1/2" to 2" and for unit 167 series.
Actuator torque 5 N·m.

Ambient temperature range: 0–55 °C
Protection class: IP 44
Supply cable length: 1,5 m
Control signal: 0 (2)–10 V. 0 (4)–20 mA. 0–5 V. 5–10 V
Rotation: 90°

CE

| Code | Electric supply | Operating time (s) | Rotation | | |
|---|---|---|---|---|---|
| **6370**44 | 24 V AC | 75 | 90° | 1 | - |



Spare probe pockets.
For 167 series units.

| Code | | |
|---|---|---|
| F0001592 | 1 | - |

# Temperature regulators



## 161

Digital regulator with synoptic diagram **for heating and cooling**.
Complete with immersion flow probes with pocket and Pt1000 Ø 6 mm return probe (pocket to be chosen according to the pipe, see accessories).
Optional climatic probe.

Adjustment temperature range: 5–95 °C
Electric supply: 230 V AC
Protection class: IP 20
Probe/cable length: 1,5 m
Control signal: 3 point, 0–10 V

CE

| Code | | |
|---|---|---|
| **161**010 | 1 | - |

3-point control 230 V AC.
0-10 V control 24 V AC with separate power supply.



## 1520

Outside compensated digital temperature regulator, only for heating.
Complete with contact flow probe and outside probe.

Adjustment temperature range: 20–90 °C
Electric supply: 230 V AC
Protection class: IP 40
Control signal: 3 point

CE

| Code | Notes | | |
|---|---|---|---|
| **152**001 | 1 channel | 1 | - |
| **152**002 | 2 channels | 1 | - |
| **152**003 | 3 channels | 1 | - |



## 1520

Digital temperature controller for heating and cooling.
Complete with flow probe, outside probe and max. relative humidity probe.

Electric supply: 230 V AC
Running power consumption: 5,5 VA
Protection class: IP 40
Control signal: 3 point

CE

| Code | Notes | | |
|---|---|---|---|
| **152**021 | 1 channel | 1 | - |

## Accessories



### 161
Outside temperature probe.

| Code | | |
|---|---|---|
| **161**002 | 1 | - |



### 161
Pressure safety switch.
Complete with cable for wiring.

Medium temperature range: 5–100 °C
Supply cable length: 1 m
Adjustment pressure range: 0,5–10 bar

| Code | | |
|---|---|---|
| **161**003 | 1 | - |



### 161
Dew point detector.

Working range (humidity) UR: 30–100 %

| Code | | |
|---|---|---|
| **161**004 | 1 | - |



### 161
Remote regulator.
Functions:
- translation of the setting curves, from +15 K to -15 K;
- maximum temperature;
- position OFF.

| Code | | |
|---|---|---|
| **161**005 | 1 | - |



### 161
Pt1000 probe, Ø6 mm.

| Code | Notes | Article use | | |
|---|---|---|---|---|
| **161**006 | L 45 mm, L cable 2,5 m | 161010 | 1 | - |
| **161**015 | L 20 mm, L cable 1,5 m | 161010 | 1 | - |



### 161
Pt1000 contact probe for pipes, Ø 6 mm.

| Code | Notes | Article use | | |
|---|---|---|---|---|
| **161**012 | L cable 2,5 m | 161010 | 1 | - |



### 161
Pt1000 probe pocket, size 1/2" M.

| Code | Notes | Article use | | |
|---|---|---|---|---|
| **161**013 | L 60 mm | 161010 | 1 | - |
| **161**014 | L 100 mm | 161010, 150006, 257006 | 1 | - |



### 161
Centralised probe for regulator 161 series.

CE

| Code | | |
|---|---|---|
| **161**020 | 1 | - |

# COMPONENTS FOR HEAT PUMP SYSTEMS

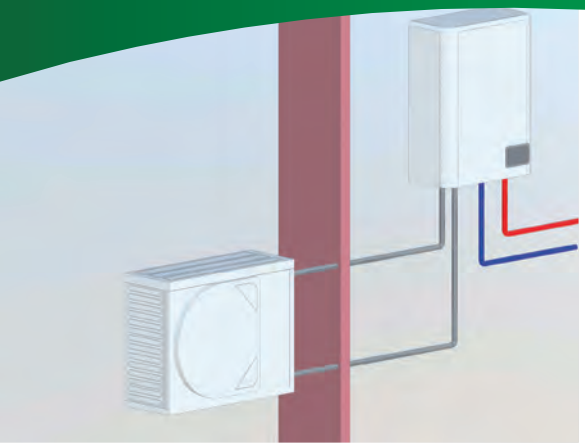

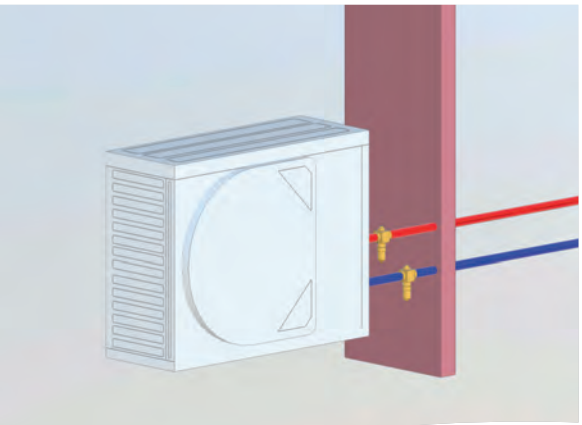

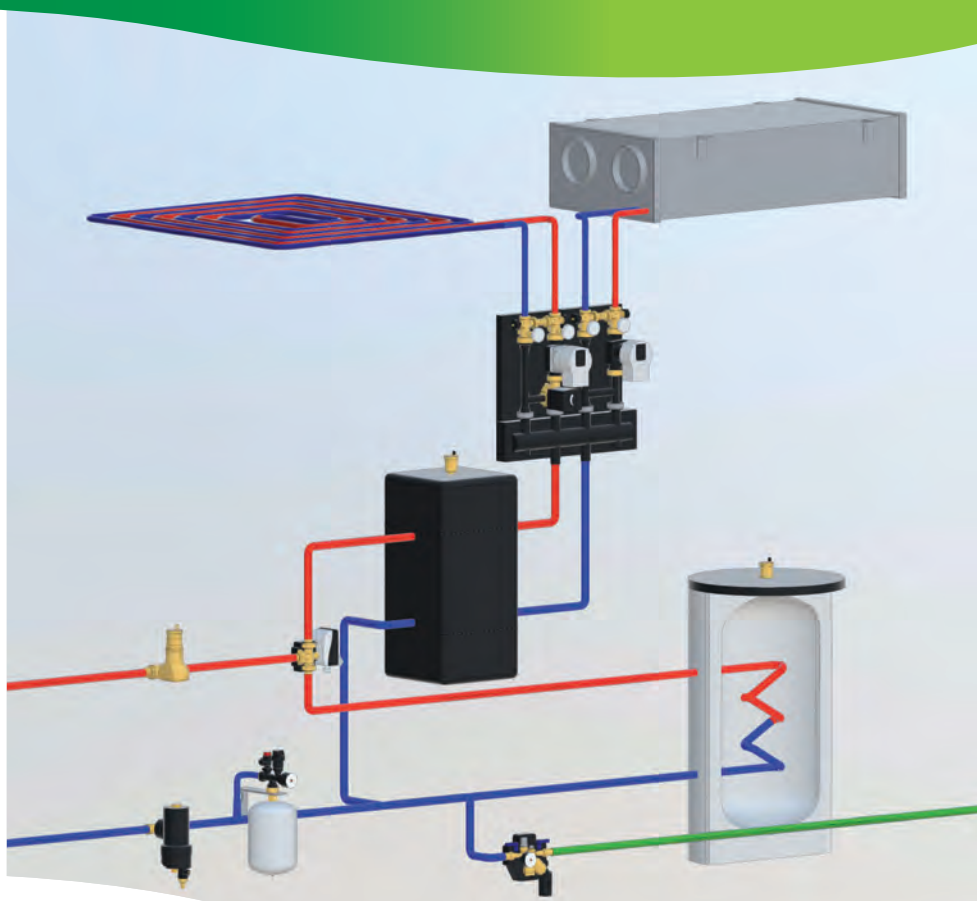

*Diagrams made with BIM families:* ***bim.caleffi.com***

**Antifreeze valve**
**Antifreeze valve with air sensor**
**Buffer tank - hydraulic separator**
**Technopolymer magnetic filters dirt separators**
**High-efficiency deaerator for heat pump systems**
**Technopolymer instrument holder**
**Diverting valves for heat pump systems**
**Differential by-pass valve**
**Changeover and distribution unit radiant panel / fan-coil system**

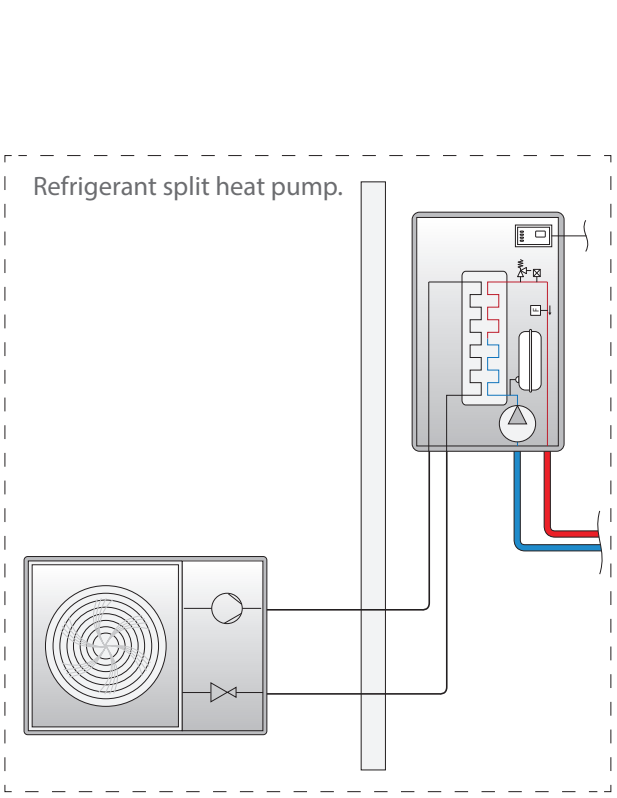
Refrigerant split heat pump.

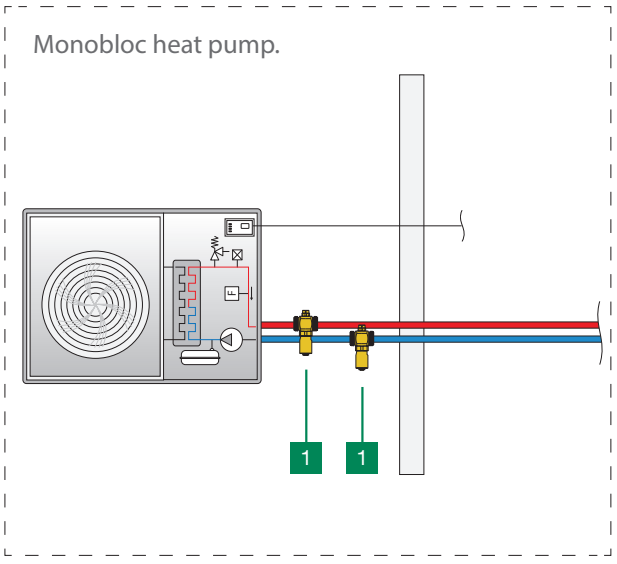
Monobloc heat pump.
1
1

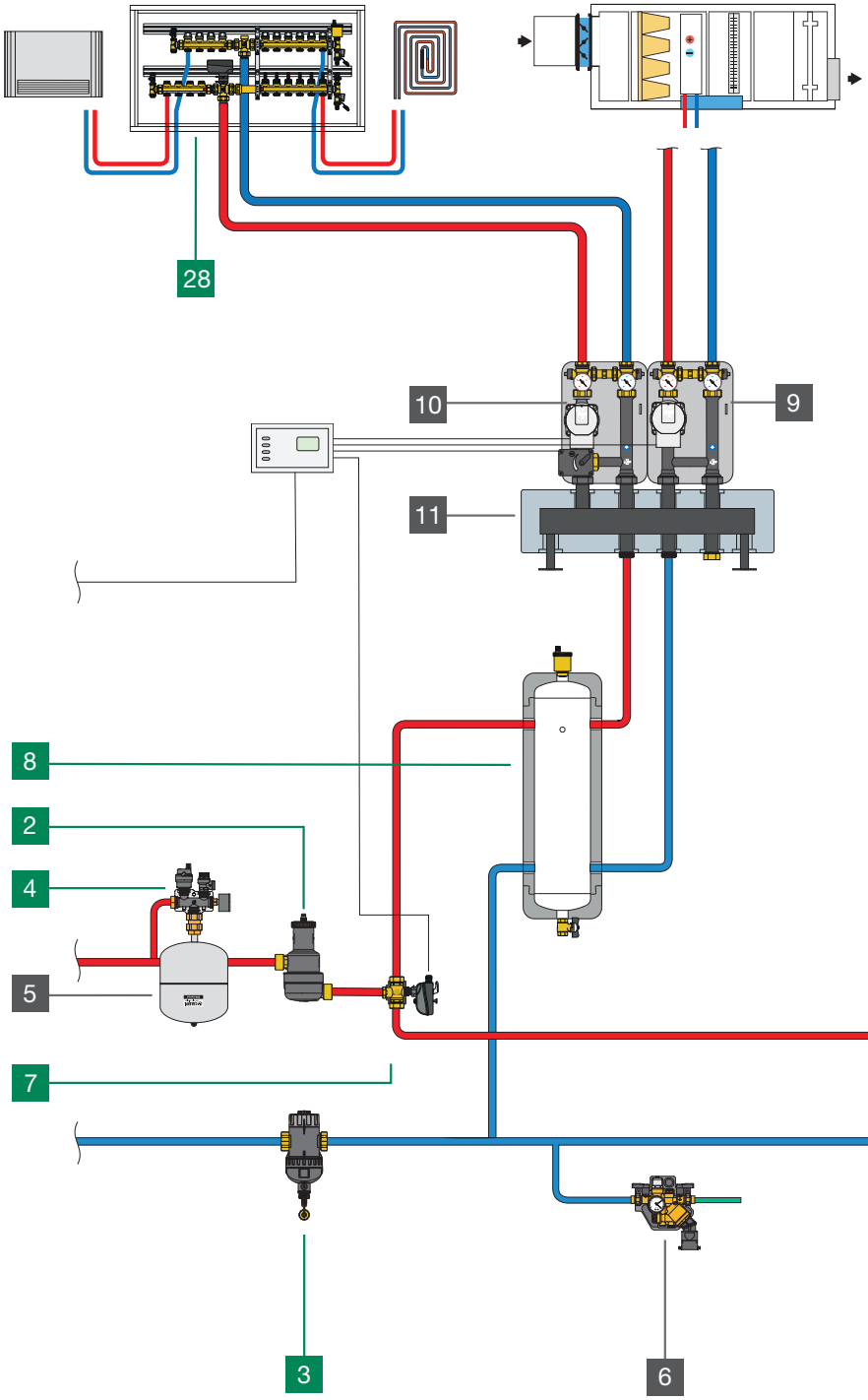
28
10
9
11
8
2
4
5
7
3
6

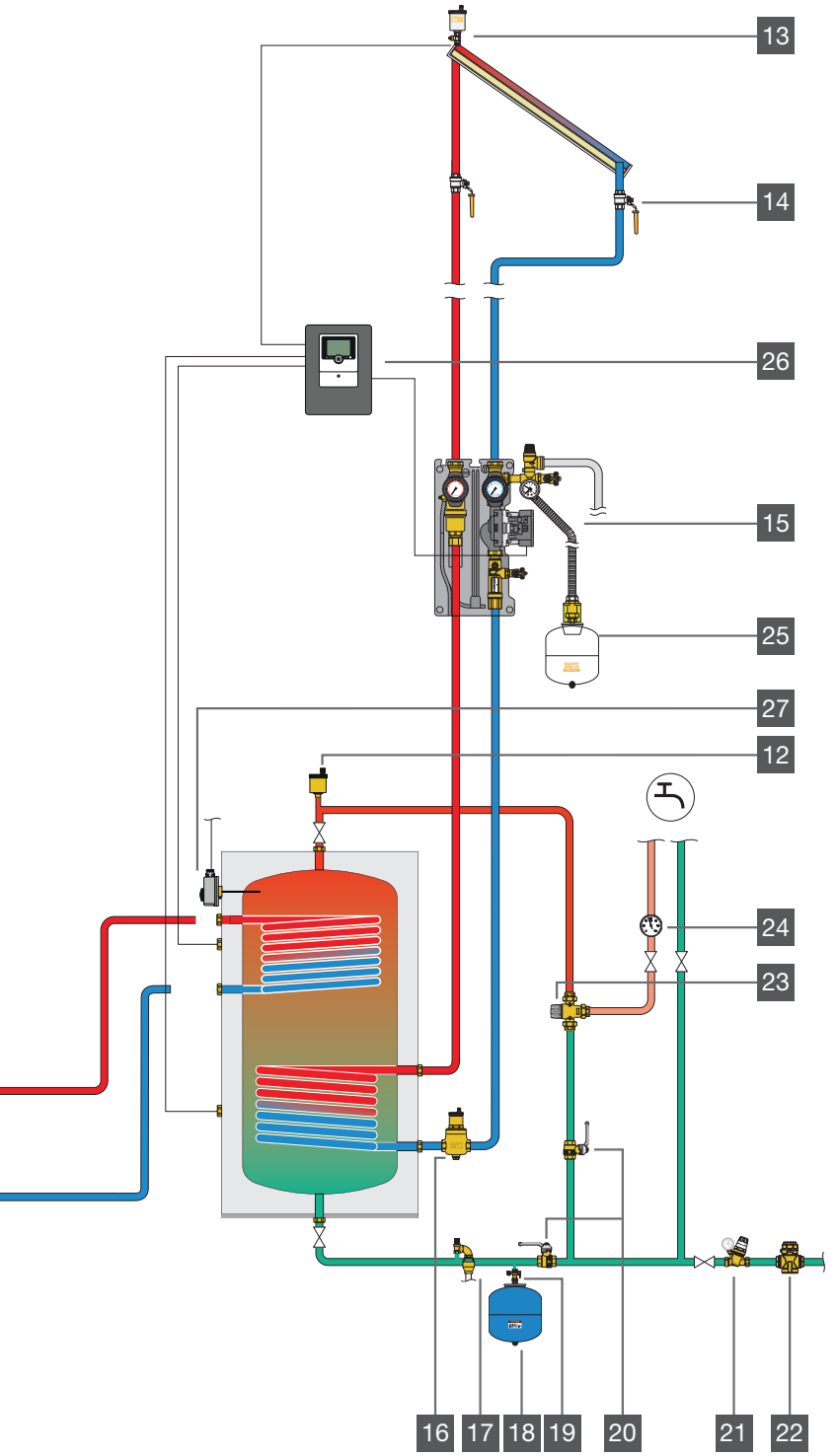


| | | |
|---|---|---|
| 1 | Series 108 | Antifreeze valve |
| 2 | Series 5516 | High-efficiency deaerator CALEFFI HED® |
| 3 | Series 577 | CALEFFI XF semi-automatic self-cleaning magnetic filter |
| 4 | Series 305 | Technopolymer instrument holder manifold |
| 5 | Series 556 | Welded expansion vessel for heating systems |
| 6 | Series 580 | Automatic compact filling unit with BA type backflow preventer, shut-off valves, strainer, pressure test ports, pressure reducing valve |
| 7 | Series 638 | 3-way motorised ball valve |
| 8 | Series 5485 | Buffer tank for heat pump systems |
| 9 | Series 165 | Direct supply unit |
| 10 | Series 167 | Motorised regulating unit |
| 11 | Series 550 | Manifold for central heating system |
| 12 | Series 5020 | MINICAL® automatic air vent |
| 13 | Series 250 | Automatic air vent for solar thermal systems, complete with shut-off cock |
| 14 | Series 240 | Ball valve for solar thermal systems |
| 15 | Series 279 | Circulation unit for solar heating systems |
| 16 | Series 251 | Deaerator for solar heating systems |
| 17 | Series 531 | Safety relief valve for domestic water systems |
| 18 | Series 568 | Welded expansion vessel for domestic systems |
| 19 | Series 5580 | Shut-off ball valve for expansion vessels, with drain cock |
| 20 | Series 3230 | Ball valve with check valve |
| 21 | Series 5350 | Pressure reducing valve |
| 22 | Series 5771 | Inspectable strainer with shut-off function |
| 23 | Series 5231 | Adjustable thermostatic mixing valve |
| 24 | Series 688 | Temperature gauge |
| 25 | Series 259 | Welded expansion vessel for solar thermal systems |
| 26 | Series 278 | DeltaSol® SLL digital regulator |
| 27 | Series 622 | Immersion thermostat, adjustable |
| 28 | Series 664 | Changeover and distribution unit radiant panel/fan-coil system |

*Caleffi S.p.A. declines any responsibility deriving from improper use of the data provided in this document. This document should not be considered as a replacement for the technical heating design.*

# TABLE FOR SIZING COMPONENTS FOR HEAT PUMP SYSTEMS

| Nominal power HP [kW] | | 3 | 4 | 5 | 6 | 7 | 8 | 9 | 10 | 11 | 12 | 14 | 16 | 18 | 22 | 25 |
|---|---|---|---|---|---|---|---|---|---|---|---|---|---|---|---|---|
| Max. set flow rate [l/h] (ΔT = 5 °C) | | 516 | 688 | 860 | 1.032 | 1.204 | 1.376 | 1.548 | 1.720 | 1.892 | 2.064 | 2.408 | 2.752 | 3.096 | 3.784 | 4.300 |
| Nominal pipe diameter* | | 3/4" | 3/4" | 1" | 1" | 1" | 1" | 1" | 1" | 1 1/4" | 1 1/4" | 1 1/4" | 1 1/4" | 1 1/2" | 1 1/2" | 1 1/2" |
| iStop® |  | **108**202 (Ø 22) | | | | | | | | **108**301/**108**302 (Ø 28) | | | | - | | |
| |  | **108**601/ **108**602 (1") | | | | | | | | **108**701/ **108**702 (1 1/4") | | | | **108**801/ **108**802 (1 1/2") | | |
| |  | **108**611 (1") | | | | | | | | **108**711 (1 1/4") | | | | | | |
| |  | **108**622 (1") | | | | | | | | - | | | | | | |
| |  | **108**322 (Ø 28) | | | | | | | | | | | | - | | |
| |  | **108**632/**108**642 (1") | | | | | | | | - | | | | | | |
| CALEFFI XF |  | **577**200 (Ø 22) | | **577**300 (Ø 28) | | | | | | - | | | | | | |
| | Δp** [kPa] | 0,33 | 0,58 | 0,67 | 0,97 | 1,31 | 1,71 | 2,17 | 2,66 | - | | | | | | |
| |  | **577**500 (3/4") | | **577**600 (1") | | | | | | **577**700 (1 1/4") | | | | **577**800 (1 1/2") | | |
| | Δp** [kPa] (100 %) | 0,25 | 0,45 | 0,65 | 0,93 | 1,27 | 1,66 | 2,09 | 2,58 | 3,13 | 3,73 | 5,06 | 6,61 | 1,81 | 2,7 | 3,5 |
| | Δp** [kPa] (50 %) | - | | | | | | | | | | | | 0,6 | 0,89 | 1,16 |
| CALEFFI HED® |  | **551**602 (Ø 22) | | | | | | | | **551**603 (Ø 28) | | | | - | | |
| | Δp [kPa] | 0,18 | 0,33 | 0,51 | 0,74 | 1,01 | 1,31 | 1,66 | 2,05 | 2,49 | 2,96 | 4,03 | 5,26 | - | | |
| |  | **551**606 (1") | | | | | | | | **551**607/**551**617 (1 1/4") | | | | - | | |
| | Δp** [kPa] (100 %) | 0,18 | 0,33 | 0,51 | 0,74 | 1,01 | 1,31 | 1,66 | 2,05 | 2,49 | 2,96 | 4,03 | 5,26 | - | | |

** Pipe pressure drop r ~ 20-22 mm w.g./m (50 °C)*

*** With clean filter*

# TABLE FOR SIZING COMPONENTS FOR HEAT PUMP SYSTEMS

| | HP nominal power [kW] | 3 | 4 | 5 | 6 | 7 | 8 | 9 | 10 | 11 | 12 | 14 | 16 | 18 | 22 | 25 |
|---|---|---|---|---|---|---|---|---|---|---|---|---|---|---|---|---|
| | Max. set flow rate [l/h] (ΔT = 5 °C) | 516 | 688 | 860 | 1.032 | 1.204 | 1.376 | 1.548 | 1.720 | 1.892 | 2.064 | 2.408 | 2.752 | 3.096 | 3.784 | 4.300 |
| | Nominal pipe diameter* | 3/4" | 3/4" | 1" | 1" | 1" | 1" | 1" | 1" | 1 1/4" | 1 1/4" | 1 1/4" | 1 1/4" | 1 1/2" | 1 1/2" | 1 1/2" |
| 5485 |  | 548520 | | 548525 | | | | 548530 | | | | 548550 | | | | |
| |  | 548551 | | | | | | | | | | | | | | |
| 6445 |  | 644562/66 | | | | | | | | - | | | | | | |
| | Δp [kPa] | 0,33 | 0,58 | 0,91 | 1,31 | 1,79 | 2,34 | 2,94 | 3,65 | - | | | | | | |
| 638 |  | - | | | | | | | | 638373 | | | | 638383 | | |
| | Δp [kPa] | - | | | | | | | | 0,59 | 0,7 | 0,95 | 1,24 | 0,43 | 0,65 | 0,84 |
| 6400 |  | 640062/66 | | | | | | | | | | - | | | | |
| | Δp [kPa] | 0,33 | 0,58 | 0,91 | 1,31 | 1,79 | 2,34 | 2,96 | 3,65 | 4,42 | 5,26 | - | | | | |
| 519 |  | 519500 (3/4", 1–6 m w.g.) - 519504 (3/4", 10–40 m w.g.) | | | | | | | | | | | | | | |
| 518 |  | 518015 (3/4", 1–6 m w.g.) | | | | | | | | | | | | | - | |
| |  | 518002 (Ø22, 1–6 m w.g.) | | | | | | | | | | | | | - | |
| |  | 518500 (3/4", 1–6 m w.g.) | | | | | | | | | | | | | - | |
| 580 |  | 580011 | | | | | | | | | | | | | - | |

* Pipe pressure drop r ~ 20-22 mm w.g./m (50 °C)

# COMPONENTS FOR HEAT PUMP SYSTEMS

## Antifreeze valve



### 108 iStop®

Antifreeze valve.
INTERNATIONAL APPLICATION PENDING

Maximum working pressure: 10 bar
Medium temperature range: 0–65 °C
Ambient temperature range: -30–60 °C
Opening temperature: 3 °C
Closing temperature: 4 °C
Material: brass

| Code | Connection | | |
|---|---|---|---|
| **108**601 | 1″M | 1 | 25 |
| **108**701 | 1 1/4″M | 1 | 20 |
| **108**801 | 1 1/2″M | 1 | 20 |
| **108**301 | Ø 28 | 1 | 20 |



### 108 NEW iStop®

Antifreeze valve.
PATENT PENDING

Maximum working pressure: 10 bar
Medium temperature range: 0–90 °C
Ambient temperature range: -30–60 °C
Opening temperature: 3 °C
Closing temperature: 4 °C
Material: brass

| Code | Connection | | |
|---|---|---|---|
| **108**602 | 1″M | 1 | 25 |
| **108**702 | 1 1/4″M | 1 | 20 |
| **108**802 | 1 1/2″M | 1 | 20 |
| **108**202 | Ø 22 | 1 | 20 |
| **108**302 | Ø 28 | 1 | 20 |



### 108 NEW iStop®

Antifreeze valve.
PATENT PENDING

Maximum working pressure: 10 bar
Medium temperature range: 0–90 °C
Ambient temperature range: -30–60 °C
Opening temperature: 3 °C
Closing temperature: 4 °C
Material: brass

| Code | Connection 1 | Connection 2 | | |
|---|---|---|---|---|
| **108**642 | 1″F captive nut | 1″F captive nut | 1 | 25 |
| **108**632 | 1″F captive nut | 1″M | 1 | 25 |



### 108 iStop®PLUS

Compact antifreeze valve.
PATENT PENDING

Material: brass
Maximum working pressure: 10 bar
Medium temperature range: 0–90 °C
Ambient temperature range: -30–60 °C
Opening temperature: 3 °C
Closing temperature: 4 °C

| Code | Connection | | |
|---|---|---|---|
| **108**622 | 1″M | 1 | 25 |
| **108**322 | Ø 28 | 1 | 20 |

## Antifreeze valve with air sensor



### 108 iStop®

Antifreeze valve with air sensor.
Enabling of antifreeze function with outside air temperature < 5 °C.
Antifreeze function (water sensor).
PATENT PENDING

Maximum working pressure: 5 bar
Medium temperature range: 0–65 °C
Ambient temperature range: -30–60 °C
Opening temperature: 3 °C
Closing temperature: 4 °C
Material: brass

| Code | Connection | | |
|---|---|---|---|
| **108**611 | 1″M | 1 | 10 |
| **108**711 | 1 1/4″M | 1 | 10 |

**Application diagrams of antifreeze valve 108 series**

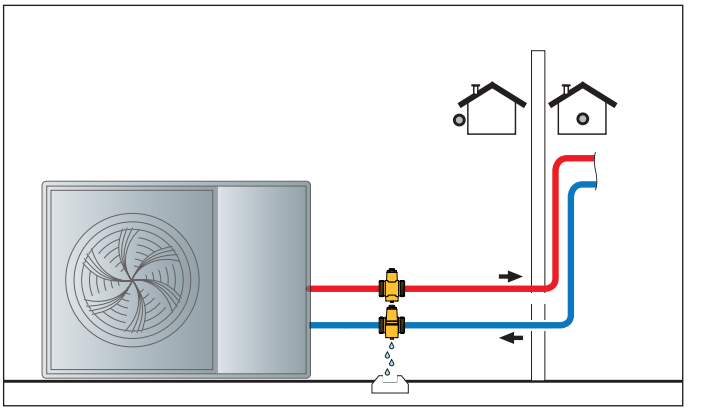

# Buffer tank - hydraulic separator



## 5485

Wall-mounted inertial hydraulic separator
**for heat pump**.
**With insulation**.

Maximum working pressure: 4 bar
Medium temperature range: -10–95 °C
Medium: glycol solutions, water
Maximum percentage of glycol: 30 %
Material: stainless steel

| Code | Connection | Max. recommended flow rate ($m^3/h$) | Volume (l) | | |
|---|---|---|---|---|---|
| **548515** | 1″F | 3,5 | 15 | 1 | - |
| **548520** | 1″F | 3,5 | 20 | 1 | - |
| **548525** | 1″F | 3,5 | 25 | 1 | - |
| **548530** | 1″F | 3,5 | 30 | 1 | - |
| **548550** | 1 1/4″F | 5,5 | 50 | 1 | - |

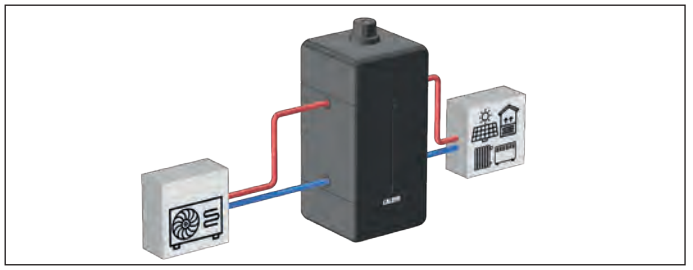

### Sizing

The hydraulic separator should be sized in accordance with the maximum recommended flow rate value at the inlet. The selected value should be the sum of the primary circuit flow rates or the sum of the secondary circuit flow rates, whichever is greater.
On the other hand, the inertial hydraulic separator volume depends on the minimum volume of water required by the heat pump manufacturer to guarantee proper machine operation even in defrosting phases. Generally, with more modern heat pumps, it can assume an average value calculated on the basis of the machine power, which varies from 2,5 to 3,5 litres/kWt.

| Volume | Connections | Max flow rate | Nominal power HP |
|---|---|---|---|
| 15 l | 1″ | 3,5 $m^3/h$ | 3–5 kWt |
| 20 l | 1″ | 3,5 $m^3/h$ | |
| 25 l | 1″ | 3,5 $m^3/h$ | 6–8 kWt |
| 30 l | 1″ | 3,5 $m^3/h$ | 9–12 kWt |
| 50 l | 1 1/4″ | 5,5 $m^3/h$ | 13–25 kWt |

### Energy class

The 5485 series is designed for high energy efficiency.

Low losses ensure the buffer tank-hydraulic separator is in the best energy efficiency classes.

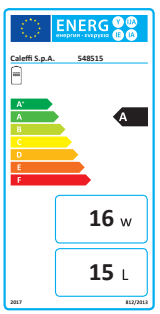




## 5485

Wall-mounted inertial hydraulic separator
**for hybrid systems**.
**With insulation**.

Maximum working pressure: 4 bar
Medium temperature range: -10–95 °C
Medium: water, glycol solutions
Maximum percentage of glycol: 30 %
Material: stainless steel

| Code | Connection | Volume (l) | | |
|---|---|---|---|---|
| **548551** | 1 1/4″F | 50 | 1 | - |

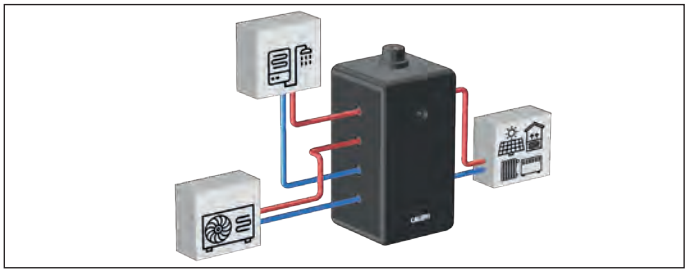

| Code | Volume [litres] | Reg. UE N. 812/2013 All. IV.2.1 | | |
|---|---|---|---|---|
| | | Useful volume [litres] | Energy class [ErP] | Dispersion [W] |
| **548515** | 15 | 15 | A | 16 |
| **548520** | 20 | 20 | A | 20 |
| **548525** | 25 | 25 | A | 22 |
| **548530** | 30 | 30 | B | 28 |
| **548550** | 50 | 49 | A | 27 |
| **548551** | 50 | 49 | A | 27 |



## 5020 MINICAL

Automatic air vent.
With hygroscopic safety cap.
**With insulation**.

Maximum working pressure: 10 bar
Maximum air discharge pressure: 2,5 bar
Medium temperature range: 0–120 °C
Material: brass

WRAS APPROVED PRODUCT
CERTIFICATION MARK

| Code | Connection | | |
|---|---|---|---|
| **502067** | 1″M | 1 | - |



Fitting for code 548550.

| Code | Connection 1 | Connection 2 | | |
|---|---|---|---|---|
| F0001878 | 1″F | 1 1/4″M | 1 | - |

# Technopolymer magnetic filters dirt separators



## 577
## CALEFFI XF

Semi-automatic self-cleaning magnetic filter.
Adjustable for horizontal and vertical pipes.
Drain cock with hose connection.
PATENT PENDING

Maximum working pressure: 3 bar
Medium temperature range: 0–90 °C
Strainer mesh size Ø: 0,16 mm
Material: technopolymer

| Code | Connection | | |
|---|---|---|---|
| **577**500 | 3/4″F | 1 | - |
| **577**600 | 1″F | 1 | - |
| **577**700 | 1 1/4″F | 1 | - |
| **577**200 | Ø 22 | 1 | - |
| **577**300 | Ø 28 | 1 | - |



## 577
## CALEFFI XF

Semi-automatic self-cleaning magnetic filter.
Complete with by-pass.
Adjustable for horizontal and vertical pipes.
Drain cock with hose connection.
PATENT PENDING

Maximum working pressure: 3 bar
Medium temperature range: 0–90 °C
Strainer mesh size Ø: 0,16 mm
Material: technopolymer

| Code | Connection | | |
|---|---|---|---|
| **577**800 | 1 1/2″F | 1 | - |
| **577**900 | 2″F | 1 | - |



## 577

Insulation for semi-automatic self-cleaning magnetic filter.

| Code | Article use | | |
|---|---|---|---|
| CBN577500 | 577200, 577300, 577500, 577600, 577700 | 1 | - |
| CBN577800 | 577800, 577900 | 1 | - |

**Application diagram CALEFFI XF**

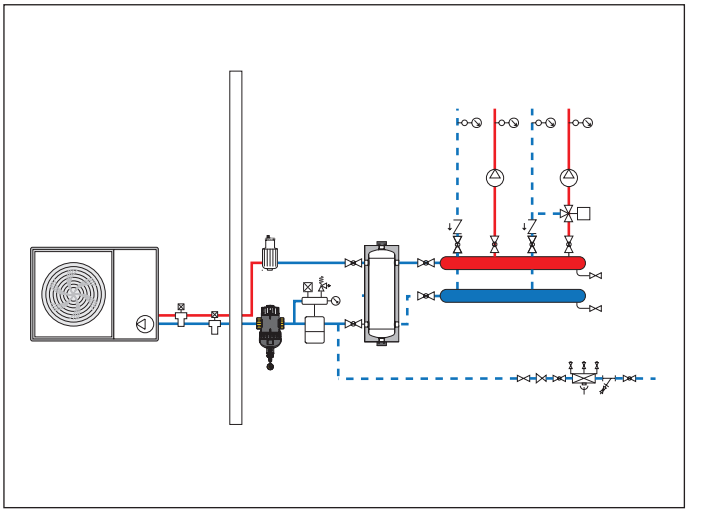

**Cleaning the filter mesh**

To clean the CALEFFI XF filter with the circulator stationary, there is no need to disassemble the component because it contains a mechanism with brushes to clean the filter mesh.

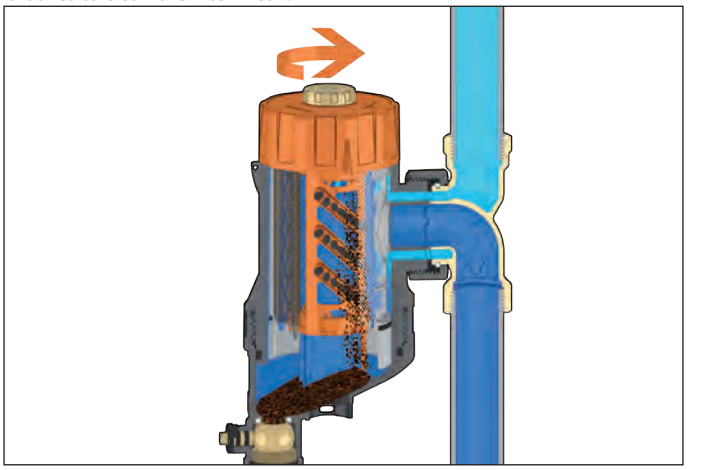

## High-efficiency deaerator for heat pump systems



### 5516 CALEFFI HED®

High-efficiency deaerator.
Adjustable for horizontal and vertical pipes with angled configuration.
With hygroscopic safety cap.
PATENT PENDING

Maximum working pressure: 3 bar
Medium temperature range: 0–90 °C
Medium: water
Material: technopolymer

| Code | Connection | | |
|---|---|---|---|
| **551606** | 1″ F | 1 | - |
| **551607** | 1 1/4″ F | 1 | - |
| **551617** | 1 1/4″ M | 1 | - |
| **551602** | Ø 22 | 1 | - |
| **551603** | Ø 28 | 1 | - |



### 5516

Insulation for high-efficiency deaerators.

| Code | Article use | | |
|---|---|---|---|
| CBN551602 | 551602, 551603, 551606, 551607, 551617 | 1 | 8 |



Pressure gauge for high-efficiency deaerator, 5516 series.

| Code | Pressure gauge scale (bar) | Ø (mm) | | |
|---|---|---|---|---|
| F0002253 | 0–4 | 50 | 1 | - |

**Application diagram CALEFFI HED**

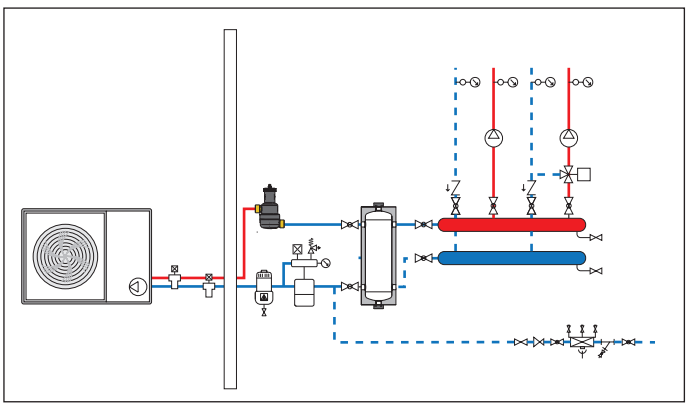

## Technopolymer instrument holder



### 305

Instrument holder in technopolymer material for heating systems.
Complete with:
- air vent;
- safety relief valve in technopolymer material;
- pressure gauge.

**With insulation**.

Medium temperature range: 5–90 °C
Maximum discharge rating: 50 kW

| Code | Connection | Notes | Pressure setting (bar) | | |
|---|---|---|---|---|---|
| **305**663 | 1″ F | safety valve certified TÜV | 3 | 1 | 5 |

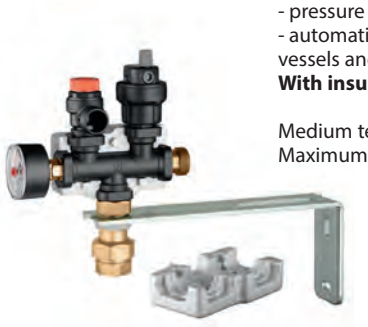

### 305

Instrument holder kit in technopolymer material for heating systems.
Complete with:
- air vent;
- safety relief valve in technopolymer material;
- pressure gauge;
- automatic shut-off cock for expansion vessels and fixing brackets.

**With insulation**.

Medium temperature range: 5–90 °C
Maximum discharge rating: 50 kW

| Code | Connection | Notes | Pressure setting (bar) | | |
|---|---|---|---|---|---|
| **305**503 | 3/4″ F | safety valve certified TÜV | 3 | 1 | 10 |



### 305

Instrument holder in technopolymer material for heating systems.
Complete with:
- air vent in technopolymer material;
- safety relief valve;
- pressure gauge.

**With insulation**.

Medium temperature range: 5–90 °C
Maximum discharge rating: 50 kW
Material: technopolymer

| Code | Connection | Notes | Pressure setting (bar) | | |
|---|---|---|---|---|---|
| **305**671 | 1″ F | - | 1,8 | 1 | 5 |
| **305**673 | 1″ F | safety valve certified NF | 3 | 1 | 5 |
| **305**674 | 1″ F | without insulation | 4 | 1 | 5 |

# Diverting valves for heat pump systems



## 6445

Motorised three-way diverting ball valve.
Complete with **three-point control** actuator, insulation and anti-condensation spacer.

**With auxiliary microswitch**.

Maximum working pressure: 10 bar
Medium temperature range: -5–110 °C
Ambient temperature range: 0–55 °C
△p max.: 10 bar
Protection class: IP 44

| Code | Connection | Electric supply | Kv ($m^3/h$) | Operating time | | |
|---|---|---|---|---|---|---|
| **6445**62 | 1″M | 230 V AC | 9 | 40 s (90° rotation) | 1 | 6 |
| **6445**66 | 1″M | 230 V AC | 9 | 10 s (90° rotation) | 1 | 6 |



## 6445 NEW

Motorised three-way diverting ball valve.
Complete with **three-point control** actuator.
**With auxiliary microswitch**.

Maximum working pressure: 10 bar
Medium temperature range: -5–110 °C
Ambient temperature range: 0–55 °C
Protection class: IP 54
Contact rating (230 V): 0,8 A

| Code | Connection | Electric supply | Kv ($m^3/h$) | Operating time | | |
|---|---|---|---|---|---|---|
| **6445**53 | 3/4″M | 230 V AC | 7,7 | 40 s (90° rotation) | 1 | 5 |
| **6445**57 | 3/4″M | 230 V AC | 7,7 | 10 s (90° rotation) | 1 | 5 |
| **6445**63 | 1″M | 230 V AC | 9 | 40 s (90° rotation) | 1 | 5 |
| **6445**67 | 1″M | 230 V AC | 9 | 10 s (90° rotation) | 1 | 5 |



## 6445 NEW

Insulation kit for use in heating and cooling systems.
For 6445 series three-way motorised valves.

| Code | Article use | | |
|---|---|---|---|
| CBN644553 | 644553, 644557, 644563, 644567 | 1 | 10 |



## 6400 NEW

Motorised three-way diverting ball valve with integrated by-pass.
Complete with **three-point control** actuator, insulation and anti-condensation spacer.
**With auxiliary microswitch**.

Maximum working pressure: 10 ELIMINARE
Medium temperature range: 0–100 °C
Maximum percentage of glycol: 30 %
Ambient temperature range: 0–55 °C
Protection class: IP 54
Setting range: 1–6 m g.w.

| Code | Connection | Secondary connection | Electric supply | Kv ($m^3/h$) | Operating time | | |
|---|---|---|---|---|---|---|---|
| **6400**62 | 1″F | 3/4″M | 230 V AC | 9 | 40 s (90° rotation) | 1 | 6 |
| **6400**66 | 1″F | 3/4″M | 230 V AC | 9 | 10 s (90° rotation) | 1 | 6 |



## 6440

Spare three-point control actuator for motorised ball zone valves 6445 series.

Ambient temperature range: 0–55 °C
Protection class: IP 54
Supply cable length: 1 m

| Code | Electric supply | Operating time | | |
|---|---|---|---|---|
| **6440**22 | 230 V AC | 40 s (90° rotation) | 1 | 10 |
| **6440**32 | 230 V AC | 10 s (90° rotation) | 1 | 10 |

**Application diagram for diverter valves with integrated by-pass, for heat pumps**

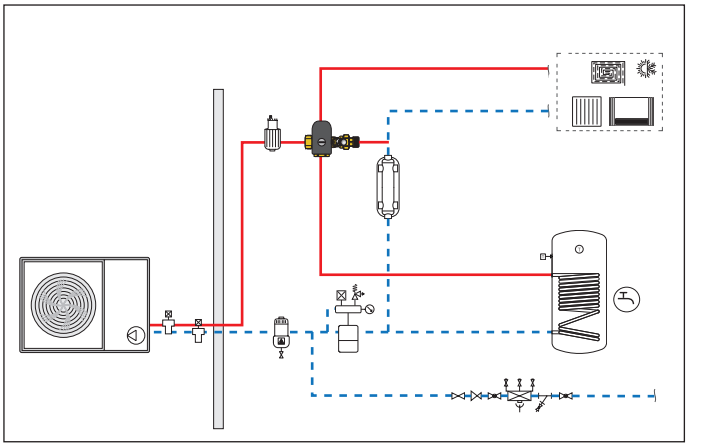



## 638

Motorised three-way diverting ball valve, for heating and conditioning systems.
Complete with **three-point control** actuator.
**With insulation**.
**With auxiliary microswitch**.

Maximum working pressure: 16 bar
Medium temperature range: -10–110 °C
Ambient temperature range: -10–55 °C
△p max.: 10 bar
Protection class: IP 65
Contact rating (230 V): 6 (2) A

| Code | Connection | Electric supply | Kv ($m^3/h$) | Operating time | | |
|---|---|---|---|---|---|---|
| **638**373 | 1 1/4″ M | 230 V AC | 24,7 | 50 s (90° rotation) | 1 | - |
| **638**383 | 1 1/2″ M | 230 V AC | 47 | 50 s (90° rotation) | 1 | - |



## 638

Spare three-point control actuators for motorised two and three-way valves, “T” drilling version 638 series.

Ambient temperature range: -10–55 °C
Protection class: IP 54
Supply cable length: 1 m

| Code | Electric supply | Operating time | | |
|---|---|---|---|---|
| **638**012 | 230 V AC | 50 s (90° rotation) | 1 | - |
| **638**014 | 24 V AC | 50 s (90° rotation) | 1 | - |

# Differential by-pass valve



## 519

Differential by-pass valve, adjustable with graduated scale.

Maximum working pressure: 10 bar
Medium temperature range: 0–110 °C
Medium: water, glycol solutions
Maximum percentage of glycol: 30 %

| Code | Inlet connection | Outlet connection | Setting range (m g.w.) | | |
|---|---|---|---|---|---|
| **519**500 | 3/4″ F | 3/4″ M | 1–6 | 1 | 50 |
| **519**504 | 3/4″ F | 3/4″ M | 10–40 | 1 | 50 |
| **519**700 | 1 1/4″ F | 1 1/4″ M | 1–6 | 1 | 10 |
| **519**703 | 1 1/4″ F | 1 1/4″ M | 5–25 | 1 | 10 |
| **519**002 | Ø 22 | Ø 22 | 1–6 | 1 | 50 |



## 518

Differential by-pass valve, adjustable with graduated scale.

Maximum working pressure: 10 bar
Medium temperature range: 0–100 °C
Medium: water, glycol solutions
Maximum percentage of glycol: 30 %

| Code | Connection | Setting range (m g.w.) | | |
|---|---|---|---|---|
| **518**015 | 3/4″ M | 1–6 | 1 | 25 |



## 518

Differential by-pass valve, adjustable with graduated scale.

Medium temperature range: 0–100 °C
Maximum percentage of glycol: 30 %
Medium: water, glycol solutions
Maximum working pressure: 10 bar

| Code | Connection | Setting range (m g.w.) | | |
|---|---|---|---|---|
| **518**500 | 3/4″ F | 1–6 | 1 | 25 |
| **518**002 | Ø 22 | 1–6 | 1 | 25 |

**Application diagram for differential by-pass valve**

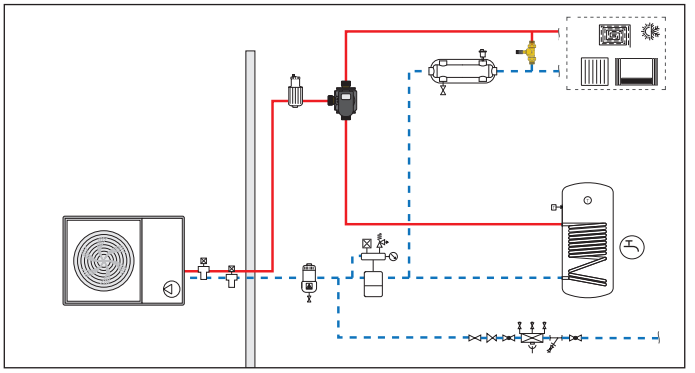

# Changeover and distribution unit radiant panel / fan-coil system

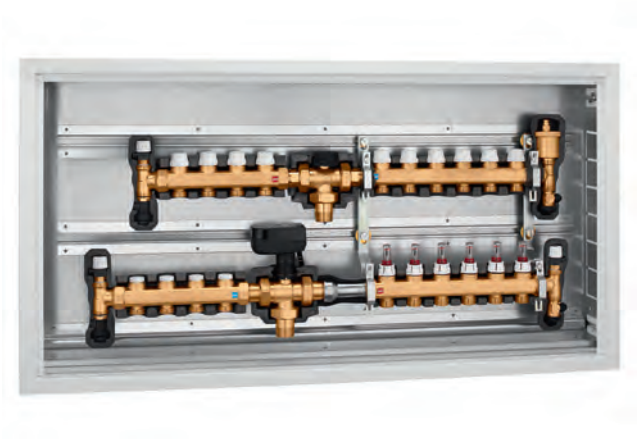

## 664

Changeover and distribution unit pre-assembled in box for radiant panel/ fan-coil systems.
Complete with:
- distribution manifold for radiant panel systems with flow meters and shut-off valves, insulated,
- distribution manifold for fan-coil systems with lockshield valves for preset flow rate and shut-off valves, insulated,
- three-way diverter valve with three-point control, complete with insulation and anti-condensation spacer,
- check valve kit,
- box with adjustable depth 110 - 140 mm.
**With insulation**.

Maximum working pressure: 6 bar
Medium temperature range: 5–60 °C
Electric supply: 230 V AC
Outlet centre distance: 50 mm

**Winter**

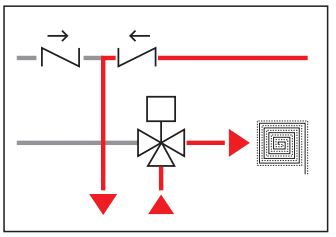

**Summer**

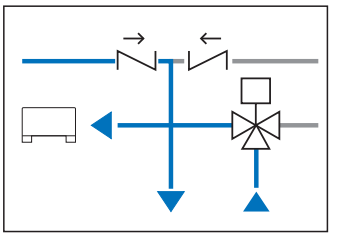

| Code | Main connection | Outlet connection to radiant panels | Outlet connection to fancoil | | |
|---|---|---|---|---|---|
| **664**0F1 | 1" M | 3/4" M - 6 out. | 3/4" M - 4 out. | 1 | - |
| **664**0G1 | 1" M | 3/4" M - 7 out. | 3/4" M - 4 out. | 1 | - |
| **664**0H1 | 1" M | 3/4" M - 8 out. | 3/4" M - 4 out. | 1 | - |
| **664**0I1 | 1" M | 3/4" M - 9 out. | 3/4" M - 4 out. | 1 | - |
| **664**0L1 | 1" M | 3/4" M - 10 out. | 3/4" M - 4 out. | 1 | - |
| **664**0M1 | 1" M | 3/4" M - 11 out. | 3/4" M - 4 out. | 1 | - |

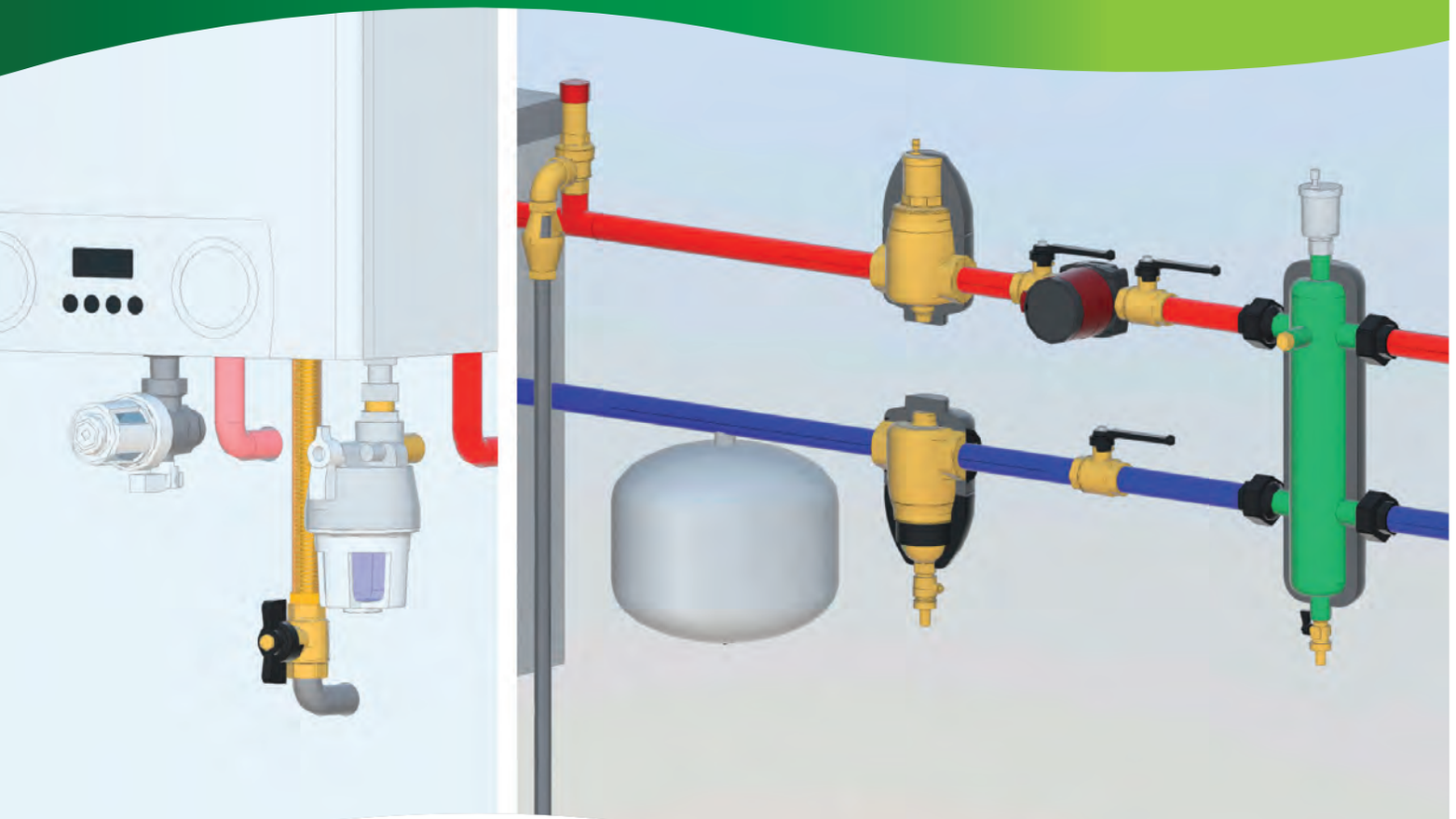

*Diagrams made with BIM families:* **bim.caleffi.com**

**Dirt separators for wall-hanging boiler systems**
**Dirt separators for heat pump systems**
**Dirt separators for boiler systems or chiller, with technical room**
**Self-cleaning device for systems**
**Automatic air vents**
**Air vents for radiators**
**Deaerators**
**Dearators-dirt separators**
**Domestic hot water treatment**
**Water treatment**

# AIR AND DIRT IN HEATING AND COOLING SYSTEMS

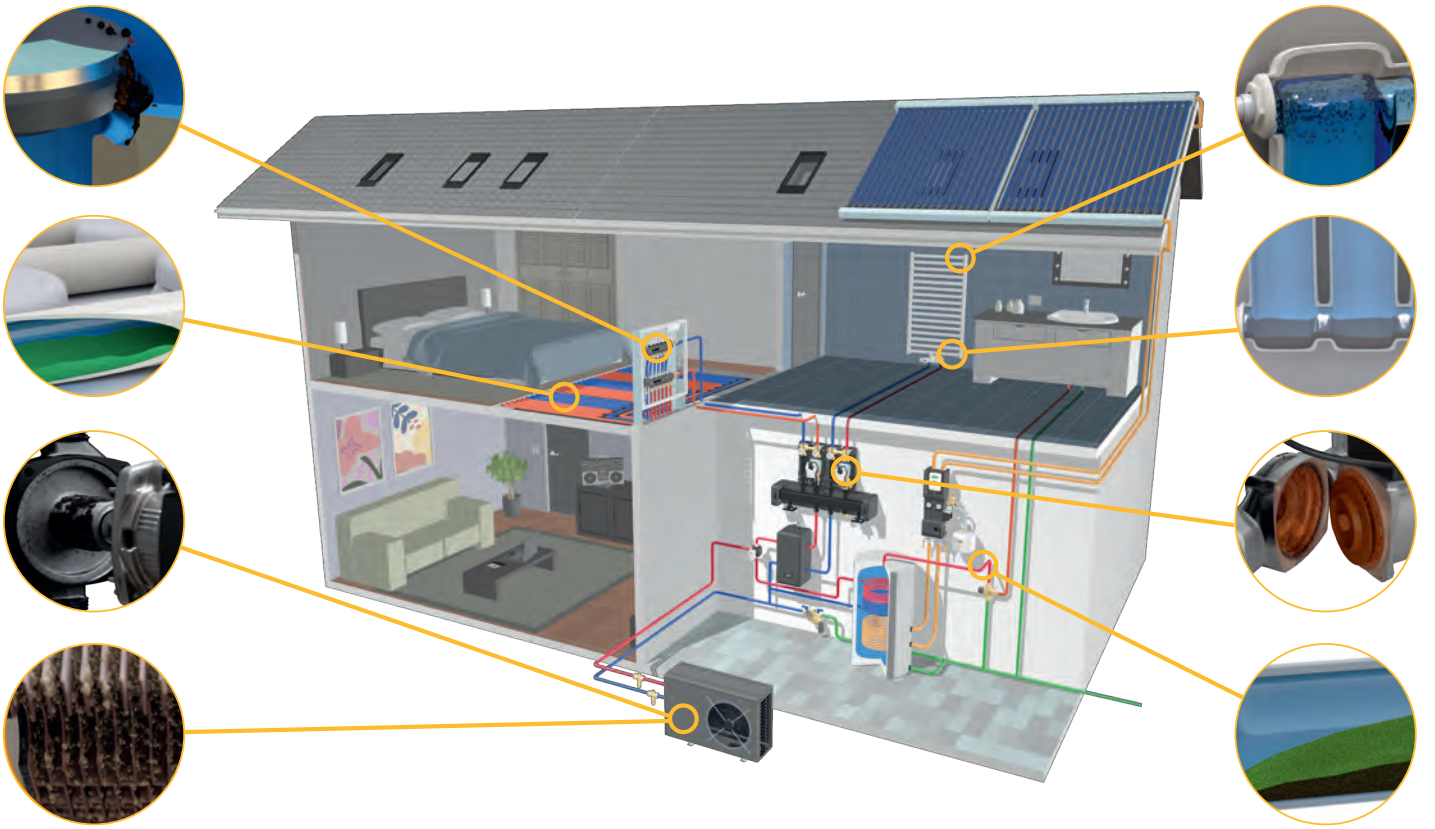

## Problems linked to the presence of dirt

The impurities contained in the water of the hydronic circuits can cause a series of problems that should not be underestimated.

**Corrosion due to differential aeration**
This is due to the fact that, in the presence of water, a layer of scale on a metal surface leads to the formation of two zones (water/impurities and impurities/metal) with a different oxygen content; for this reason, localised batteries are activated with current flows that lead to corrosion of the metal surfaces.

**Irregular operation of the valves**
This is due to impurities, which can adhere stubbornly to the valve seats and cause deformities in regulation and leaks, for example in balancing valves.

**Pumps blocking and seizing**
These problems may be suspended particles circulating through the pumps which can build up inside them, due to both the particular geometry of the pumps and to the effect of the magnetic fields generated by the pumps themselves.

**Lower efficiency of the heat exchangers**
Deposits and scale build-up can significantly reduce both the flow rates of the fluids and the heat exchanging surfaces.

## Problems linked to the presence of air

The problems caused by air contained in hydronic systems can be serious and unpleasant both for the users and for the professionals who service the system. If these problems are not analysed thoroughly, they can often lead to solutions that are not decisive in the long term.
Initially it is very important to identify the phenomena that the air in the system can provoke.

**Noise in the pipes and in the terminals**
The air contained in the system makes noise in the pipes and the adjustment devices. This is much more evident during system startup, i.e. when the flow begins to flow through the pipes.

**Insufficient flow rates, complete circulation blockages and insufficient heat exchange between the emission terminals and the room**
Circulation can be partially or totally blocked by air bubbles present in some points in the system. This phenomenon is particularly serious for radiant panel systems, but can also cause thermal imbalances and lower radiator or fan coil efficiency.

**Corrosion of the system**
This is provoked by the oxygen present in the air and can lead to the weakening but also the breakage of components such as pipes, radiators and boiler heat exchangers.

**Cavitation**
This may compromise durability and operation, especially of the pumps and regulating valves.

## WALL-MOUNTED BOILER SYSTEMS

### MAGNETIC FILTERS

*ANGLED INSTALLATION*



**CALEFFI XS®**
**5459**
3/4" M x 3/4" F captive nut
Ø22

*IN-LINE INSTALLATION*



**CALEFFI XS®**
**5459**
3/4" M x 3/4" F captive nut
Ø22

### DIRT SEPARATOR IN TECHNOPOLYMER WITH MAGNET AND FILTER

*UNIVERSAL INSTALLATION*



**DIRTMAG*MINI*®**
**5450**
3/4" F captive nut x 3/4" M
Ø22

## HEAT PUMP SYSTEMS

### TECHNOPOLYMER MAGNETIC FILTERS DIRT SEPARATORS

*SEMI-AUTOMATIC SELF-CLEANING*



**CALEFFI XF**
**577**
3/4" – 2"
Ø22 - Ø28

*MANUAL CLEANING*



**DIRTMAGPLUS®**
**5453**
3/4" – 1 1/4"
Ø22 - Ø28

## WALL-MOUNTED BOILER SYSTEMS WITH TECHNICAL ROOM - COOLING SYSTEMS

### TECHNOPOLYMER DIRT SEPARATOR WITH MAGNET

*STANDARD FLOW RATES*



**DIRTMAG®**
**5453**
3/4" – 1" – 1 1/4"
Ø22 - Ø28

### TECHNOPOLYMER DIRT SEPARATOR WITH DOUBLE MAGNET

*HIGH FLOW RATES*



**DIRTMAGPRO®**
**5457**
3/4" – 1 1/4"
Ø22 - Ø28

### TECHNOPOLYMER MAGNETIC FILTER DIRT SEPARATOR

*SEMI-AUTOMATIC CLEANING*



**CALEFFI XF**
**577**
3/4" – 1 1/4"
Ø22 - Ø28

## MEDIUM/LARGE SYSTEMS

### TECHNOPOLYMER MAGNETIC DIRT SEPARATOR



**DIRTMAG®**
**5453**
1 1/2" – 2"

### TECHNOPOLYMER MAGNETIC FILTER DIRT SEPARATOR



**CALEFFI XF**
**577**
1 1/2" – 2"

### BRASS DIRT SEPARATOR WITH MAGNET



**DIRTMAG®**
**5463**
3/4" – 2"

## LARGE SYSTEMS

### STEEL DIRT SEPARATOR WITH MAGNET

*IN-LINE INSTALLATION*



**DIRTMAG®**
**5466**
DN 50–DN 150



**DIRTMAG®**
**5466**
DN 200–DN 300

### SELF-CLEANING DIRT SEPARATOR FILTER WITH MAGNET

*BY-PASS INSTALLATION*



**DIRTMAGCLEAN®**
**5790**
2"

# DIRT SEPARATORS FOR WALL-HANGING BOILER SYSTEMS

## Magnetic filters dirt separators



### 5459 CALEFFI XS®

Under-boiler magnetic filter. Angled connections.
PATENT PENDING

Maximum working pressure: 3 bar
Medium temperature range: 0–90 °C
Material: brass
Finish: chrome plated

| Code | Inlet connection | Outlet connection | | |
|---|---|---|---|---|
| **5459**00 | 3/4″ M | 3/4″ F captive nut | 1 | 10 |



### 5459 CALEFFI XS®

Under-boiler magnetic filter.
In-line installation.
PATENT PENDING

Maximum working pressure: 3 bar
Medium temperature range: 0–90 °C
Material: brass
Finish: chrome plated

| Code | Inlet connection | Outlet connection | | |
|---|---|---|---|---|
| **5459**10 | 3/4″ M | 3/4″ F captive nut | 1 | 12 |



Reduced centre distance connection fitting with nut and gasket.

Finish: chrome plated
Material: brass

| Code | Connection | | |
|---|---|---|---|
| F0001297 | 3/4″ F | 1 | - |



Flushing kit and additives addition.

| Code | | |
|---|---|---|
| F0001037 | 1 | 10 |

## Water treatment kit




### KIT5459

Protection pack.
Package complete with:
- Under-boiler magnetic filter;
- C3 FAST CLEANER;
- C1 FAST INHIBITOR.

To be used with kit code F0001037.

| Code | | |
|---|---|---|
| **KIT5459**00 | 1 | - |

## Under-boiler dirt separator strainer with magnet



### 5450 DIRTMAGMINI®

Under-boiler dirt separator strainer with magnet.
Drain cock with hose connection.
PATENT PENDING

Maximum working pressure: 3 bar
Medium temperature range: 0–90 °C
Material: technopolymer

| Code | Inlet connection | Outlet connection | | |
|---|---|---|---|---|
| **5450**00 | 3/4″ M captive nut | 3/4″ F | 1 | 5 |



### 5450 DIRTMAGMINI®

Under-boiler dirt separator strainer with magnet and shut-off valves.
Drain cock with hose connection.
PATENT PENDING

Maximum working pressure: 3 bar
Medium temperature range: 0–90 °C
Material: technopolymer

| Code | Connection | | |
|---|---|---|---|
| **5450**22 | Ø 22 | 1 | 5 |

# DIRT SEPARATORS FOR HEAT PUMP SYSTEMS

## Semi-automatic self-cleaning magnetic filter



### 577
### CALEFFI XF

Semi-automatic self-cleaning magnetic filter.
Adjustable for horizontal and vertical pipes.
Drain cock with hose connection.
PATENT PENDING

Maximum working pressure: 3 bar
Medium temperature range: 0–90 °C
Strainer mesh size Ø: 0,16 mm
Material: technopolymer

| Code | Connection | | |
|---|---|---|---|
| **577**500 | 3/4" F | 1 | - |
| **577**600 | 1" F | 1 | - |
| **577**700 | 1 1/4" F | 1 | - |
| **577**200 | Ø 22 | 1 | - |
| **577**300 | Ø 28 | 1 | - |



### 577
### CALEFFI XF

Semi-automatic self-cleaning magnetic filter.
Complete with by-pass.
Adjustable for horizontal and vertical pipes.
Drain cock with hose connection.
PATENT PENDING

Maximum working pressure: 3 bar
Medium temperature range: 0–90 °C
Strainer mesh size Ø: 0,16 mm
Material: technopolymer

| Code | Connection | | |
|---|---|---|---|
| **577**800 | 1 1/2" F | 1 | - |
| **577**900 | 2" F | 1 | - |



### 577

Insulation for semi-automatic self-cleaning magnetic filter.

| Code | Article use | | |
|---|---|---|---|
| CBN577500 | 577200, 577300, 577500, 577600, 577700 | 1 | - |
| CBN577800 | 577800, 577900 | 1 | - |

## Multifunction device in technopolymer with dirt separator and strainer



### 5453
### DIRTMAGPLUS®

Multifunction device with dirt separator and strainer.
Dirt separator with composite internal element, complete with magnet.
Two inspectable filters with steel mesh: 1 for first passage (blue finish) already installed, 1 for maintenance (grey finish) in pack.
Shut-off valves with nut, brass body.
Drain cock with hose connection.
Adjustable for horizontal, vertical or 45 ° installation.

Maximum working pressure: 3 bar
Medium temperature range: 0–90 °C
Material: technopolymer

| Code | Connection | | |
|---|---|---|---|
| **545375** | 3/4" F | 1 | 5 |
| **545376** | 1" F | 1 | 5 |
| **545377** | 1 1/4" F | 1 | 5 |
| **545372** | Ø 22 | 1 | 5 |
| **545373** | Ø 28 | 1 | 5 |



Accessory kit for circuit filling and flushing, for 5453 series.

| Code | | | |
|---|---|---|---|
| F49476 | | 1 | - |



Spare strainers.

| Code | Notes | | |
|---|---|---|---|
| F49474/BL | first passage strainer (blue) | 1 | 10 |
| F49474/GR | maintenance strainer (grey) | 1 | 10 |

# DIRT SEPARATORS FOR BOILER SYSTEMS OR CHILLER, WITH TECHNICAL ROOM

## Technopolymer dirt separators with magnet



### 5453 DIRTMAG®

Dirt separator **with magnet**.
**Adjustable for horizontal or vertical installations**.
Drain cock with hose connection.
INTERNATIONAL APPLICATION PENDING

Maximum working pressure: 3 bar
Medium temperature range: 0–90 °C
Material: technopolymer

| Code | Connection | Max. recommended flow rate ($m^3/h$) | | |
|---|---|---|---|---|
| **5453**05 | 3/4″F | 1,3 | 1 | 5 |
| **5453**06 | 1″F | 1,3 | 1 | 5 |
| **5453**07 | 1 1/4″F | 2,1 | 1 | 5 |
| **5453**02 | Ø 22 | 1,3 | 1 | 5 |
| **5453**03 | Ø 28 | 1,3 | 1 | 5 |



### 5453 DIRTMAG® NEW

Dirt separator **with magnet**.
**Adjustable for horizontal or vertical installations**.
Drain cock with hose connection.
INTERNATIONAL APPLICATION PENDING

Maximum working pressure: 3 bar
Medium temperature range: 0–90 °C
Material: technopolymer

| Code | Connection | Max. recommended flow rate ($m^3/h$) | | |
|---|---|---|---|---|
| **5453**08 | 1 1/2″F | 4,3 | 1 | - |
| **5453**09 | 2″F | 6 | 1 | - |



### 5453

Insulation for dirt separators 5453 series.

| Code | Article use | | |
|---|---|---|---|
| CBN545305 | 545305, 545306, 545705, 545706, 545702, 545703 | 1 | - |
| CBN545307 | 545307 | 1 | - |
| CBN545308 | 545308 | 1 | - |
| CBN545309 | 545309 | 1 | - |



### 5453 DIRTMAG®

Dirt separator **with magnet**.
**Adjustable for horizontal or vertical installations.**
Drain cock with hose connection.
INTERNATIONAL APPLICATION PENDING

Maximum working pressure: 3 bar
Medium temperature range: 0–90 °C

| Code | Connection | Max. recommended flow rate ($m^3/h$) | | |
|---|---|---|---|---|
| **5453**25 | 3/4″F | 1,3 | 1 | - |
| **5453**26 | 1″F | 1,3 | 1 | - |

**Application diagram wall-hanging boiler**

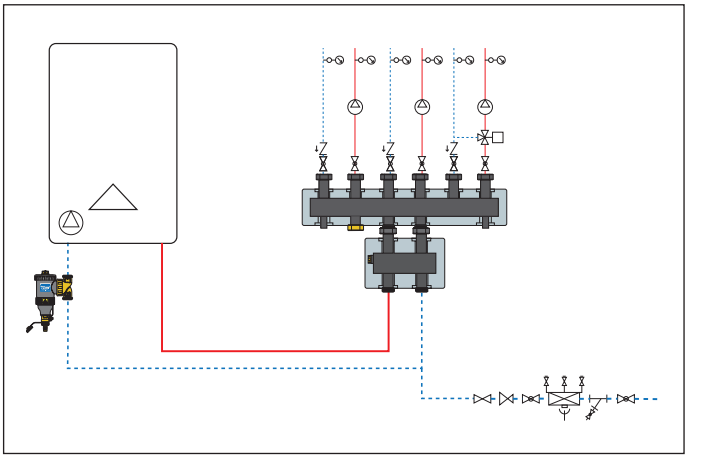

**Application diagram boiler**

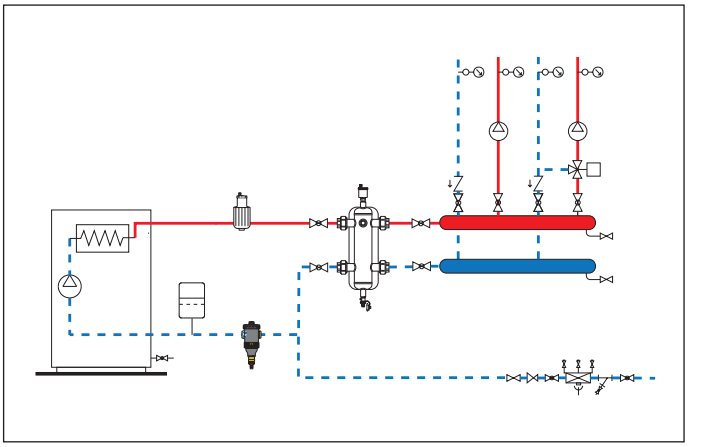



# 5453 DIRTMAG®

Dirt separator with shut off valve, **with magnet**.
Adjustable for horizontal or vertical pipes.
Drain cock with hose connection.
INTERNATIONAL APPLICATION PENDING

Maximum working pressure: 3 bar
Medium temperature range: 0–90 °C
Material: technopolymer

| Code | Connection | Max. recommended flow rate ($m^3/h$) | | |
|---|---|---|---|---|
| **5453**45 | 3/4" F | 1,3 | 1 | 5 |
| **5453**46 | 1" F | 1,3 | 1 | 5 |
| **5453**47 | 1 1/4" F | 2,1 | 1 | 5 |



# 5453

Insulation for dirt separators 54534 series.

| Code | Article use | | |
|---|---|---|---|
| CBN545345 | 545345, 545346, 545347 | 1 | - |



# 5457 DIRTMAGPRO®

Dirt separator **with double magnet** for high flow rates.
**Adjustable for horizontal or vertical pipes**.
Drain cock with hose connection.

Maximum working pressure: 3 bar
Medium temperature range: 0–90 °C
Material: technopolymer

| Code | Connection | Max. recommended flow rate ($m^3/h$) | | |
|---|---|---|---|---|
| **5457**05 | 3/4" F | 1,6 | 1 | 5 |
| **5457**06 | 1" F | 1,8 | 1 | 5 |
| **5457**07 | 1 1/4" F | 2,6 | 1 | 5 |
| **5457**02 | Ø 22 | 1,6 | 1 | 5 |
| **5457**03 | Ø 28 | 1,8 | 1 | 5 |

## Water treatment kit



# 5453

Protection pack.
Complete with:
- dirt separator with shut-off valves and magnet;
- C3 CLEANER;
- C1 INHIBITOR.

| Code | Notes | | |
|---|---|---|---|
| KIT545345 | with 3/4" dirt separator | 1 | - |
| KIT545346 | with 1" dirt separator | 1 | - |
| KIT545342 | with Ø 22 dirt separator | 1 | - |

**Operating principle DIRTMAGPRO**

The impurities circulating within the closed circuits of systems, consisting of some sand and dirt particles but mostly ferrous material such as magnetite, are collected in a large collection chamber that does not require frequent cleaning.
The ferrous impurities are captured by the removable magnetic ring and the four magnets positioned in the centre of the flow. These magnets allow greater velocity of the medium, up to 1.6 m/s and, as a result, help to achieve a higher flow rate. Made using a technopolymer material specifically designed for use in air-conditioning systems, this dirt separator is especially versatile as it can be installed on both horizontal and vertical pipes.

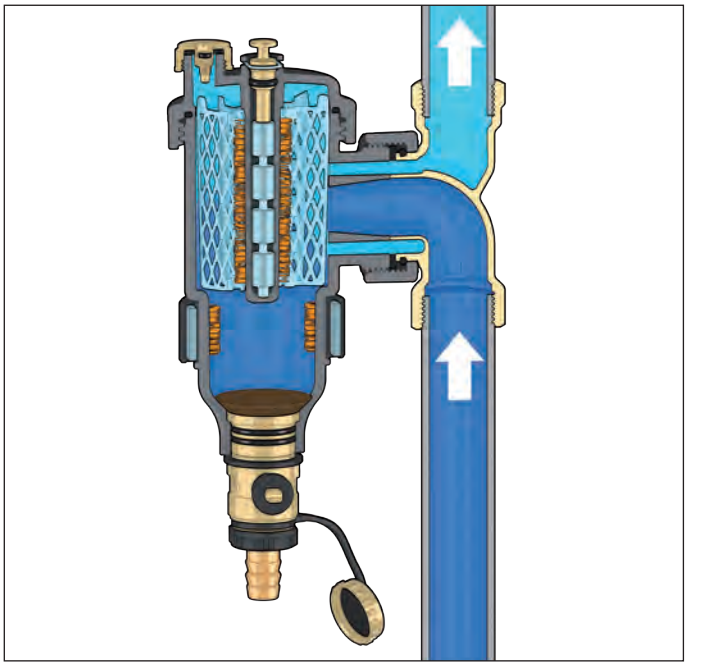

## Brass dirt separators with magnet



### 5463 DIRTMAG®

Dirt separator with magnet.
Drain cock with hose connection.
Top connection with plug.
Particle separation rating down to 5 µm.
**With insulation**.
INTERNATIONAL APPLICATION PENDING

Maximum working pressure: 10 bar
Medium temperature range: 0–110 °C
Material: brass

| Code | Connection | | |
|---|---|---|---|
| **5463**15 | 3/4″F | 1 | - |
| **5463**16 | 1″F | 1 | 5 |
| **5463**17 | 1 1/4″F | 1 | - |
| **5463**18 | 1 1/2″F | 1 | - |
| **5463**19 | 2″F | 1 | - |



### 5463 DIRTMAG®

Dirt separator with magnet.
Drain cock with hose connection.
Top connection with plug.
Particle separation rating down to 5 µm.
INTERNATIONAL APPLICATION PENDING

Maximum working pressure: 10 bar
Medium temperature range: 0–110 °C
Material: brass

| Code | Connection | | |
|---|---|---|---|
| **5463**05 | 3/4″F | 1 | 6 |
| **5463**06 | 1″F | 1 | 6 |
| **5463**07 | 1 1/4″F | 1 | 5 |
| **5463**08 | 1 1/2″F | 1 | 5 |
| **5463**09 | 2″F | 1 | 5 |



### 5463

Insulation for dirt separators 5463 and 5462 series.

| Code | Article use | | |
|---|---|---|---|
| CBN546205 | 546305, 546306 | 1 | - |
| CBN546207 | 546307, 546308 | 1 | - |
| CBN546209 | 545309 | 1 | - |

## Steel dirt separators with magnet



### 5466 DIRTMAG®

Dirt separator with magnet.
Particle separation rating down to 5 µm.
To be coupled with flat counterflanges EN 1092-1.
**With insulation**.

Maximum working pressure: 10 bar
Medium temperature range: 0–100 °C
Material: steel
Finish: coated

| Code | Connection | | |
|---|---|---|---|
| **5466**50 | DN 50 - PN 16 | 1 | - |
| **5466**60 | DN 65 - PN 16 | 1 | - |
| **5466**80 | DN 80 - PN 16 | 1 | - |
| **5466**10 | DN 100 - PN 16 | 1 | - |
| **5466**12 | DN 125 - PN 16 | 1 | - |
| **5466**15 | DN 150 - PN 16 | 1 | - |



### 5466 DIRTMAG®

Dirt separator with magnet.
To be coupled with flat counterflanges EN 1092-1.
1/2″ F temperature probe connection.
Particle separation rating down to 5 µm.

Maximum working pressure: 10 bar
Medium temperature range: 0–100 °C
Material: steel
Finish: coated

| Code | Connection | | |
|---|---|---|---|
| **5466**20 | DN 200 - PN 10 | 1 | - |
| **5466**25 | DN 250 - PN 10 | 1 | - |
| **5466**30 | DN 300 - PN 10 | 1 | - |

## SELF-CLEANING DEVICE FOR SYSTEMS

### Self-cleaning magnetic filters dirt separators

# 5790 DIRTMAGCLEAN®

Self-cleaning dirt separator filter with magnet.
Body and support feet in stainless steel AISI 304.
Particle separation rating down to 2 µm.
Suitable for the addition of chemical additives.
Fitted for MODBUS-RTU management.
PATENT PENDING

Maximum working pressure: 10 bar
Medium temperature range: 5–85 °C
Electric supply: 230 V AC
Material: stainless steel



CE

| Code | Inlet connection | Outlet connection | Drain connection | Flushing connection | Kv ($m^3/h$) | | |
|---|---|---|---|---|---|---|---|
| **579000** | 2″M | 2″F | 1″M | 1″F | 45 | 1 | - |

# 5790 DIRTMAGCLEAN®

Manual cleaning dirt separator filter with magnet.
Body and support feet in stainless steel AISI 304.
Particle separation rating down to 2 µm.
Suitable for the addition of chemical additives.
PATENT PENDING

Maximum working pressure: 10 bar
Medium temperature range: 5–85 °C
Material: stainless steel



| Code | Inlet connection | Outlet connection | Drain connection | Flushing connection | Kv ($m^3/h$) | | |
|---|---|---|---|---|---|---|---|
| **579001** | 2″F | 2″F | 1″F | 1″F | 45 | 1 | - |

**Application diagrams 579000/579001 code**

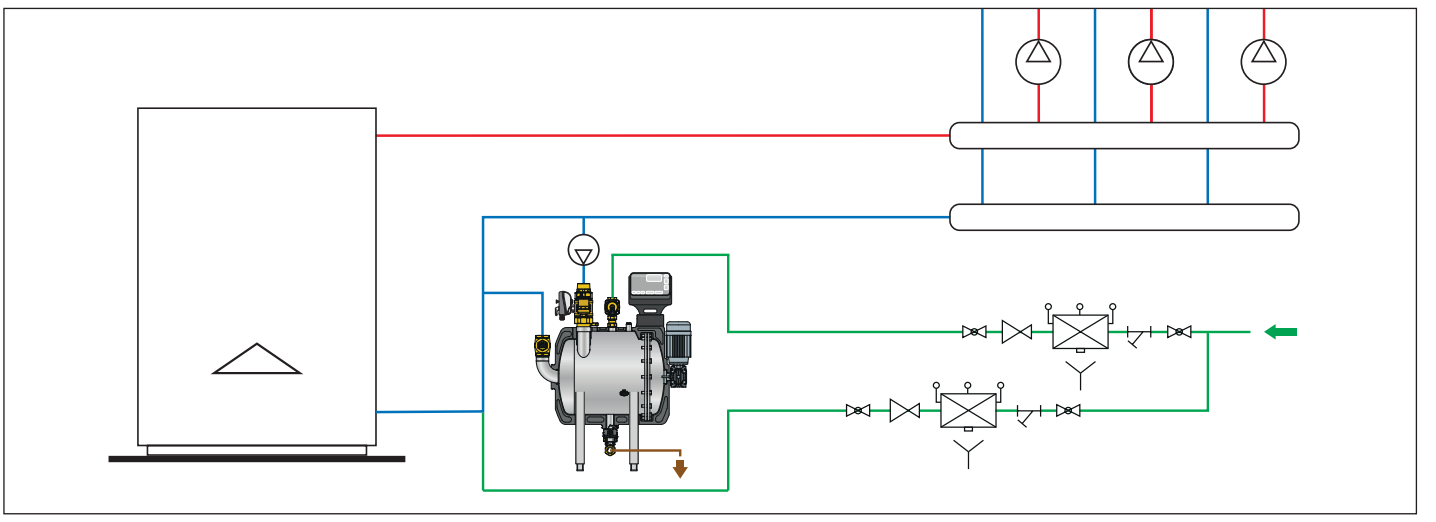

# Automatic air vents

| | Standard automatic air vents | | | | | | | |
|---|---|---|---|---|---|---|---|---|
| **Code** | ***5020***30/40 | ***5020***31/41 | ***5020***50/60 | ***5020***51/61 | ***5021***30/40 | ***5021***31/41 | ***5021***32/42 | ***5021***33 |
| | **MINICAL**® | | | | | | | |
| |  |  |  |  |  |  |  |  |
| **Material** | brass | nickel plated/brass | brass | nickel plated/brass | brass | nickel plated/brass | nickel plated/brass | brass |
| **Maximum working pressure** | 10 bar | | | | | | | |
| **Maximum working temperature** | 120 °C | | | | 110 °C | | | |
| **Automatic shut-off** | optional | | - | | ✔ | | | |
| **Hygroscopic cap** | optional | | ✔ | | optional | | ✔ | - |
| **Anti-suction valve** | optional | | optional | | optional | | optional | ✔ |
| **Connections** | 3/8" - 1/2" | 3/8" - 1/2" | 3/4" - 1" | 3/4" - 1" | 3/8" - 1/2" | 3/8" - 1/2" | 3/8" - 1/2" | 3/8" |

| | Compact automatic air vents | | | |
|---|---|---|---|---|
| **Code** | ***5024***20/30 | ***5025***30/33/43 | ***5026***30/40/41 | ***5027***30 |
| | **ROBOCAL**® | | | |
| |  |  |  |  |
| **Material** | brass | brass | nickel plated/brass | brass |
| **Maximum working pressure** | 10 bar | | | |
| **Maximum working temperature** | 115 °C | 110 °C | 115 °C | 110 °C |
| **Automatic shut-off** | optional | ✔ | optional | ✔ |
| **Hygroscopic cap** | - | - | - | - |
| **Anti-suction valve** | - | - | optional | optional |
| **Connections** | 1/4" - 3/8" | 3/8" - 1/2" | 3/8" - 1/2" | 3/8" |

| | Automatic air vents with high discharge capacity | | |
|---|---|---|---|
| **Code** | ***501***500 | ***551***004 | ***5022***21/31/41 |
| | **MAXCAL**® | **DISCALAIR**® | **VALCAL**® |
| |  |  |  |
| **Material** | brass | brass | nickel plated/brass |
| **Maximum working pressure** | 16 bar | 10 bar | 10 bar |
| **Maximum working temperature** | 120 °C | 110 °C | 120 °C |
| **Automatic shut-off** | - | - | optional |
| **Hygroscopic cap** | - | optional | optional |
| **Anti-suction valve** | - | optional | optional |
| **Connections** | 3/4" | 1/2" | 1/4"- 3/8"- 1/2" |

**Hygroscopic cap**

The discs increase in volume by 50 % when they come into contact with water. This leads to valve closure, in order to avoid potential leaks of water.

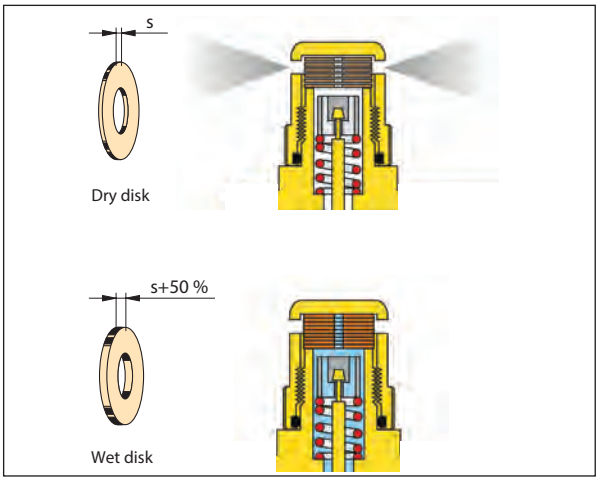


**Automatic shut-off cock**

This facilitates maintenance operations by inhibiting the flow of water when the valve is deactivated, and makes it easier to make sure the air vent device is working.

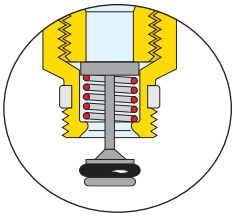

**Anti-suction valve**

Installed on the air vent line, it functions as a check valve: it only allows air to be released.

In a situation where the system experiences negative pressure, the internal element closes off the outlet channel to prevent unwanted air from entering.

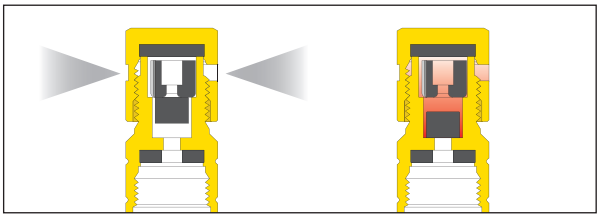

# AUTOMATIC AIR VENTS

## Standard automatic air vents



### 5020 MINICAL

Automatic air vent.

Maximum working pressure: 10 bar
Maximum air discharge pressure: 2,5 bar
Medium temperature range: 0–120 °C
Material: brass

WRAS APPROVED PRODUCT CERTIFICATION MARK

| Code | Connection | | |
|---|---|---|---|
| **5020**30 | 3/8" M | 10 | 50 |
| **5020**40 | 1/2" M | 10 | 50 |



### 5020 MINICAL

Automatic air vent. With hygroscopic safety cap.

Maximum working pressure: 10 bar
Maximum air discharge pressure: 2,5 bar
Medium temperature range: 0–120 °C
Material: brass

WRAS APPROVED PRODUCT CERTIFICATION MARK

| Code | Connection | | |
|---|---|---|---|
| **5020**50 | 3/4" M | 10 | 50 |
| **5020**60 | 1" M | 10 | 50 |



### 5021 MINICAL

Automatic air vent.
PTFE seal connection.
With automatic shut-off cock.

Maximum working pressure: 10 bar
Maximum air discharge pressure: 2,5 bar
Medium temperature range: 0–110 °C
Material: brass

WRAS APPROVED PRODUCT CERTIFICATION MARK

| Code | Connection | Notes | | |
|---|---|---|---|---|
| **5021**30 | 3/8" M | - | 10 | 100 |
| **5021**40 | 1/2" M | without PTFE seal | 10 | 100 |



### 5021 MINICAL

Automatic air vent.
With automatic shut-off cock and anti-vacuum cap.

Maximum working pressure: 10 bar
Maximum air discharge pressure: 2,5 bar
Medium temperature range: 0–110 °C
Material: brass

| Code | Connection | | |
|---|---|---|---|
| **5021**33 | 3/8" M | 1 | 100 |



### 5020 MINICAL

Automatic air vent.

Maximum working pressure: 10 bar
Maximum air discharge pressure: 2,5 bar
Medium temperature range: 0–120 °C
Finish: nickel plated
Material: brass

WRAS APPROVED PRODUCT CERTIFICATION MARK

| Code | Connection | | |
|---|---|---|---|
| **5020**31 | 3/8" M | 10 | 50 |
| **5020**41 | 1/2" M | 10 | 50 |



### 5020 MINICAL

Automatic air vent. With hygroscopic safety cap.

Maximum working pressure: 10 bar
Maximum air discharge pressure: 2,5 bar
Medium temperature range: 0–120 °C
Finish: nickel plated
Material: brass

WRAS APPROVED PRODUCT CERTIFICATION MARK

| Code | Connection | | |
|---|---|---|---|
| **5020**51 | 3/4" M | 10 | 50 |
| **5020**61 | 1" M | 10 | 50 |

Always replace the valve cap with Caleffi 5620 or R59681 AQUASTOP hygroscopic safety cap in all places where inspection is not possible.



## 5021 MINICAL

Automatic air vent.
PTFE seal connection.
With automatic shut-off cock and hygroscopic safety cap.

Maximum working pressure: 10 bar
Maximum air discharge pressure: 2,5 bar
Medium temperature range: 0–110 °C
Finish: nickel plated
Material: brass

WRAS APPROVED PRODUCT CERTIFICATION MARK

| Code | Connection | Notes | | |
|---|---|---|---|---|
| **5021**32 | 3/8″ M | - | 10 | 100 |
| **5021**42 | 1/2″ M | without PTFE seal | 10 | 100 |



## 5021 MINICAL

Automatic air vent.
PTFE seal connection.
With automatic shut-off cock.

Maximum working pressure: 10 bar
Maximum air discharge pressure: 2,5 bar
Medium temperature range: 0–110 °C
Finish: nickel plated
Material: brass

WRAS APPROVED PRODUCT CERTIFICATION MARK

| Code | Connection | Notes | | |
|---|---|---|---|---|
| **5021**31 | 3/8″ M | - | 10 | 100 |
| **5021**41 | 1/2″ M | without PTFE seal | 10 | 100 |

# Automatic air vents with high discharge capacity



## 501 MAXCAL

Automatic air vent for heating, cooling and refrigeration.
High discharge capacity.
Brass body and cover, stainless steel internal components.

Maximum working pressure: 16 bar
Maximum air discharge pressure: 6 bar
Medium temperature range: -20–120 °C

WRAS APPROVED PRODUCT CERTIFICATION MARK

| Code | Connection | Drain connection | | |
|---|---|---|---|---|
| **501**500 | 3/4″ F | 3/8″ F | 1 | 5 |



## 551 DISCALAIR®

High performance automatic air vent.

Maximum working pressure: 10 bar
Maximum air discharge pressure: 10 bar
Medium temperature range: 0–110 °C
Material: brass

ATTESTATION DE CONFORMITE SANITAIRE ACS

| Code | Connection | | |
|---|---|---|---|
| **551**004 | 1/2″ F | 1 | 10 |



## 5022 VALCAL

Automatic air vent.

Maximum working pressure: 10 bar
Maximum air discharge pressure: 4 bar
Medium temperature range: 0–120 °C
Finish: nickel plated
Material: brass

| Code | Connection | | |
|---|---|---|---|
| **5022**21 | 1/4″ M | 1 | 25 |
| **5022**31 | 3/8″ M | 1 | 25 |
| **5022**41 | 1/2″ M | 1 | 25 |

Always replace the valve cap with Caleffi 5620 or R59681 AQUASTOP hygroscopic safety cap in all places where inspection is not possible.

## Compact automatic air vents



### 5024 ROBOCAL

Automatic air vent.

Maximum working pressure: 10 bar
Maximum air discharge pressure: 4 bar
Medium temperature range: 0–115 °C
Material: brass

| Code | Connection | | |
|---|---|---|---|
| **5024**20 | 1/4" M | 112 | - |
| **5024**30 | 3/8" M | 10 | 50 |



### 5025 ROBOCAL

Automatic air vent.
With automatic shut-off cock.

Maximum working pressure: 10 bar
Maximum air discharge pressure: 4 bar
Medium temperature range: 0–110 °C
Material: brass

| Code | Connection | | |
|---|---|---|---|
| **5025**33 | 3/8" M | 10 | 100 |
| **5025**43 | 1/2" M | 10 | 100 |



### 5026 ROBOCAL

Automatic air vent.

Maximum working pressure: 10 bar
Maximum air discharge pressure: 6 bar
Medium temperature range: 0–115 °C
Material: brass

| Code | Connection | Notes | | |
|---|---|---|---|---|
| **5026**30 | 3/8" M | - | 10 | 50 |
| **5026**40 | 1/2" M | without O-Ring seal | 10 | 100 |
| **5026**41 | 3/8" M | nickel plated | 10 | 100 |



### 5027 ROBOCAL

Automatic air vent. Complete with automatic shut-off cock.

Maximum working pressure: 10 bar
Maximum air discharge pressure: 6 bar
Medium temperature range: 0–110 °C
Material: brass

| Code | Connection | | |
|---|---|---|---|
| **5027**30 | 3/8" M | 10 | 100 |

## Accessories for automatic air vents



### 561

Automatic shut-off cock.
"For automatic air vents 5020, 5024, 5026 series.
PTFE seal on thread."

Maximum working pressure: 10 bar
Medium temperature range: 0–110 °C
Material: brass

| Code | Inlet connection | Outlet connection | Notes | | |
|---|---|---|---|---|---|
| **561**230 | 1/4" F | 3/8" M | union washer | 50 | 500 |
| **561**300 | 3/8" F | 3/8" M | - | 10 | - |
| **561**340 | 3/8" F | 1/2" M | - | 10 | - |
| **561**400 | 1/2" F | 1/2" M | without PTFE seal on thread | 10 | - |



### 561

Automatic shut-off cock.
For automatic air vents 5020 and 5022 series.
PTFE seal on thread.

Maximum working pressure: 10 bar
Medium temperature range: 0–110 °C
Finish: nickel plated
Material: brass

| Code | Inlet connection | Outlet connection | Notes | | |
|---|---|---|---|---|---|
| **561**301 | 3/8" F | 3/8" M | - | 10 | - |
| **561**401 | 1/2" F | 1/2" M | without PTFE seal on thread | 10 | - |



## AQUASTOP

Hygroscopic safety cap.

Material: brass

| Code | | |
|---|---|---|
| R59681 | 1 | - |



## 5621

Anti-vacuum cap.

| Code | | |
|---|---|---|
| **5621**00 | 100 | - |



## 5622

Anti-vacuum cap.
For automatic air vents 5026 and 5027 series.

| Code | | |
|---|---|---|
| **5622**00 | 100 | - |

# Air vents for radiators



## 504 AERCAL

Automatic air vent for radiators.
With hygroscopic safety cap.

Maximum working pressure: 10 bar
Maximum air discharge pressure: 2,5 bar
Medium temperature range: 5–100 °C
Finish: chrome plated
Material: brass

| Code | Connection | | |
|---|---|---|---|
| **504**401 | 1/2" M | 1 | 25 |
| **504**501 | 3/4" M | 1 | 25 |
| **504**611 | 1" M right | 1 | 25 |
| **504**621 | 1" M left | 1 | 25 |



## 507 AERCAL

End plug for radiators with automatic air vent.
With hygroscopic safety cap.
With rubber seal.

Maximum working pressure: 10 bar
Maximum air discharge pressure: 6 bar
Medium temperature range: 5–100 °C
Finish: chrome plated
Material: brass

| Code | Connection | | |
|---|---|---|---|
| **507**611 | 1" M right | 1 | 25 |
| **507**621 | 1" M left | 1 | 25 |
| **507**711 | 1 1/4" M right | 1 | 25 |
| **507**721 | 1 1/4" M left | 1 | 25 |

# Air vent for radiator accessories



## AQUASTOP

Hygroscopic safety cap.
For caps 507 series.

Finish: chrome plated
Material: brass

| Code | | |
|---|---|---|
| R59720 | 1 | - |



## AQUASTOP

Hygroscopic safety cap.
For automatic air vents 5020, 5022 and 504 series.

Finish: nickel plated
Material: brass

| Code | | |
|---|---|---|
| 562000 | 50 | - |

# AIR VENTS FOR RADIATORS

## Manual air vents for radiators



### 505

Manual air vent for radiators.
White POM (acetal resin) knob.
PTFE seal on thread.

Maximum working pressure: 10 bar
Medium temperature range: 5–90 °C
Finish: nickel plated
Material: brass

| Code | Connection | | |
|---|---|---|---|
| **505**111 | 1/8" M | 50 | - |
| **505**121 | 1/4" M | 50 | 500 |
| **505**131 | 3/8" M | 50 | 500 |



### 5055

Manual air vent for radiators. Rubber seal.
White POM (acetal resin) knob.
Rubber seal.
PTFE seal on thread.
PATENT

Maximum working pressure: 10 bar
Medium temperature range: 5–90 °C
Finish: nickel plated
Material: brass

| Code | Connection | | |
|---|---|---|---|
| **5055**11 | 1/8" M | 10 | 100 |
| **5055**21 | 1/4" M | 10 | 100 |
| **5055**31 | 3/8" M | 10 | 100 |
| **5055**41 | 1/2" M | 10 | 50 |

**Manual air vent for radiators 5055 series**

The identifying detail of this valve is an internal seal in a special elastic material which provides a tight seal in relation to limited tightening of the knob and possible temperature changes.

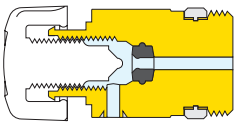



### 5054

Manual air vent for radiators. **Adjustable drain**.
White POM (acetal resin) knob.
PTFE seal on thread.

Maximum working pressure: 10 bar
Medium temperature range: 5–90 °C
Finish: nickel plated
Material: brass

| Code | Connection | | |
|---|---|---|---|
| **5054**11 | 1/8" M | 50 | - |
| **5054**21 | 1/4" M | 50 | - |
| **5054**31 | 3/8" M | 50 | - |
| **5054**41 | 1/2" M | 50 | - |

## Hygroscopic air vents for radiators



### 5080

Automatic hygroscopic air vent for radiators.
White POM (acetal resin) knob.
PTFE seal on thread.

Maximum working pressure: 10 bar
Medium temperature range: 5–100 °C
Finish: nickel plated
Material: brass

| Code | Connection | | |
|---|---|---|---|
| **5080**11 | 1/8" M | 25 | - |
| **5080**21 | 1/4" M | 25 | - |
| **5080**31 | 3/8" M | 25 | - |
| **5080**41 | 1/2" M | 25 | - |

## Spare parts for manual air vents



### 5081

Spare hygroscopic cartridge for 5080 series.

| Code | Connection | | |
|---|---|---|---|
| **5081**00 | 12 p.1,5 | 25 | - |

## Drain cock for radiators



### 337

Drain cock.
Adjustable outlet.
PTFE seal on thread.

Maximum working pressure: 6 bar
Medium temperature range: 5–85 °C
Medium: water, glycol solutions
Maximum percentage of glycol: 30 %

WRAS APPROVED PRODUCT CERTIFICATION MARK

| Code | Connection | | |
|---|---|---|---|
| **337**121 | 1/4″ M | 50 | 200 |
| **337**131 | 3/8″ M | 50 | 200 |



### 337

Drain cock with metal seal.
Adjustable outlet.
PTFE seal on thread.

Maximum working pressure: 10 bar
Medium temperature range: 5–100 °C

WRAS APPROVED PRODUCT CERTIFICATION MARK

| Code | Connection | | |
|---|---|---|---|
| **337**221 | 1/4″ M | 80 | 400 |
| **337**231 | 3/8″ M | 50 | 250 |



### 560

Drain cock for radiators and wall-mounted boilers.
The 10-piece pack includes an extractor code 560000.

Maximum working pressure: 10 bar
Medium temperature range: 5–100 °C
Finish: nickel plated

| Code | Connection | Notes | | |
|---|---|---|---|---|
| **560**421 | 1/2″ M | drain cock | 10 | - |
| **560**000 | - | extractor hose connection | 25 | - |

# Deaerators - installation at air collection points

## ALL SYSTEM TYPES

### AUTOMATIC AIR VENT VALVE



**DISCALAIR®**
**551**
1/2″

# Deaerators - in-line installation

## WALL-MOUNTED BOILER SYSTEMS

### TECHNOPOLYMER DEAERATOR



**DISCALSLIM®**
**551**
3/4″ – 1″– Ø 18 – Ø 22

## HEAT PUMP SYSTEMS

### HIGH-EFFICIENCY DEAERATOR FOR HEAT PUMP SYSTEMS



**CALEFFI HED®**
**5516**
1″ – 1 1/4″– Ø 22 – Ø 28

### TECHNOPOLYMER DEAERATOR



**DISCAL®**
**551**
3/4″ – 1 1/4″



**DISCAL®**
**551**
1 1/2″ – 2″

## WALL-MOUNTED BOILER SYSTEMS WITH TECHNICAL ROOM

### BRASS DEAERATOR WITH ADJUSTABLE CONNECTIONS



**DISCAL®**
**551**
3/4″ – 1″ – Ø 22 – Ø 28

### TECHNOPOLYMER DEAERATOR WITH ADJUSTABLE CONNECTIONS



**DISCAL®**
**551**
3/4″ – 1 1/4″

## MEDIUM/LARGE SYSTEMS

### BRASS DEAERATOR



**DISCAL®**
**551**
3/4″ – 2″

### TECHNOPOLYMER DEAERATOR WITH ADJUSTABLE CONNECTIONS



**DISCAL®**
**551**
1 1/2″ – 2″

## LARGE SYSTEMS

### STEEL DEAERATOR



**DISCAL®**
**551**
DN 50–DN 150



**DISCAL®**
**551**
DN 200–DN 300

# DEAERATORS

## High-efficiency deaerators at air collection points



### 551 DISCALAIR®

High performance automatic air vent.

Maximum working pressure: 10 bar
Maximum air discharge pressure: 10 bar
Medium temperature range: 0–110 °C
Material: brass

| Code | Connection | | |
|---|---|---|---|
| **551**004 | 1/2"F | 1 | 10 |

Always replace the valve cap with Caleffi 5620 or R59681 AQUASTOP hygroscopic safety cap in all places where inspection is not possible.

## Under-boiler deaerators



### 551 DISCALSLIM

Deaerator.
Adjustable for horizontal and vertical pipes.
With hygroscopic safety cap.
PATENT PENDING

Maximum working pressure: 3 bar
Medium temperature range: 0–110 °C
Material: technopolymer

| Code | Connection | | |
|---|---|---|---|
| **551**805 | 3/4"F | 1 | 5 |
| **551**806 | 1"F | 1 | 5 |
| **551**801 | Ø 18 | 1 | 5 |
| **551**802 | Ø 22 | 1 | 5 |



### 551

Insulation for deaerators DISCALSLIM 551 series.

| Code | Article use | | |
|---|---|---|---|
| CBN551805 | 551801, 551802, 551805, 551806 | 1 | 8 |

## Deaerators for systems with technical room



### 551 DISCAL® NEW

Technopolymer deaerator.
Adjustable for horizontal or vertical installations.

Maximum working pressure: 3 bar
Medium temperature range: 0–90 °C
Material: technopolymer

| Code | Connection | | |
|---|---|---|---|
| **551**205 | 3/4"F | 1 | 5 |
| **551**206 | 1"F | 1 | 5 |
| **551**207 | 1 1/4"F | 1 | 5 |
| **551**202 | Ø 22 | 1 | 5 |
| **551**203 | Ø 28 | 1 | 5 |



### 551 DISCAL® NEW

Technopolymer deaerator.
Adjustable for horizontal or vertical installations.

Maximum working pressure: 3 bar
Medium temperature range: 0–90 °C
Material: technopolymer

| Code | Connection | | |
|---|---|---|---|
| **551**208 | 1 1/2"F | 1 | - |
| **551**209 | 2"F | 1 | - |



### 551 NEW

Insulation for technopolymer deaerators 551 series.

| Code | Article use | | |
|---|---|---|---|
| CBN551202 | 551202, 551203, 551205, 551206 | 1 | - |
| CBN551207 | 551207 | 1 | - |
| CBN551208 | 551208 | 1 | - |
| CBN551209 | 551209 | 1 | - |



## 551 DISCAL®

Deaerator.
Adjustable for horizontal or vertical installations.

Maximum working pressure: 10 bar
Maximum air discharge pressure: 10 bar
Medium temperature range: 0–110 °C
Material: brass

| Code | Connection | | |
|---|---|---|---|
| **551**705 | 3/4" F | 1 | 5 |
| **551**706 | 1" F | 1 | 5 |
| **551**716 | 1" M | 1 | 5 |
| **551**702 | Ø 22 | 1 | 5 |
| **551**703 | Ø 28 | 1 | 5 |



## 551 DISCAL®

Deaerator.

Maximum working pressure: 10 bar
Maximum air discharge pressure: 10 bar
Medium temperature range: 0–110 °C
Material: brass

| Code | Connection | | |
|---|---|---|---|
| **551**003 | 3/4" F | 1 | 10 |
| **551**002 | Ø 22 compression ends | 1 | 10 |

## High-efficiency deaerator for heat pumps



## 5516 CALEFFI HED®

High-efficiency deaerator.
Adjustable for horizontal and vertical pipes with angled configuration.
With hygroscopic safety cap.
PATENT PENDING

Maximum working pressure: 3 bar
Medium temperature range: 0–90 °C
Medium: water
Material: technopolymer

| Code | Connection | | |
|---|---|---|---|
| **551606** | 1" F | 1 | - |
| **551607** | 1 1/4" F | 1 | - |
| **551617** | 1 1/4" M | 1 | - |
| **551602** | Ø 22 | 1 | - |
| **551603** | Ø 28 | 1 | - |



## 5516

Insulation for high-efficiency deaerators.

| Code | Article use | | |
|---|---|---|---|
| CBN551602 | 551602, 551603, 551606, 551607, 551617 | 1 | 8 |



Pressure gauge for high-efficiency deareator, 5516 series.

| Code | Article use | Pressure gauge scale (bar) | Ø (mm) | | |
|---|---|---|---|---|---|
| F0002253 | 305663, 305673 | 0–4 | 50 | 1 | - |

## Deaerators for medium-large systems



### 551 DISCAL®

Brass deaerator.

Maximum working pressure: 10 bar
Maximum air discharge pressure: 10 bar
Medium temperature range: 0–110 °C
Material: brass

| Code | Connection | | |
|---|---|---|---|
| **551**005 | 3/4″F | 1 | 6 |
| **551**006 | 1″F | 1 | 6 |
| **551**007 | 1 1/4″F | 1 | 6 |
| **551**008 | 1 1/2″F | 1 | 6 |
| **551**009 | 2″F | 1 | - |



### 551

Insulation for deaerators 551 series.

| Code | Article use | | |
|---|---|---|---|
| CBN551005 | 551005, 551006 | 1 | - |
| CBN551007 | 551007, 551008 | 1 | - |
| CBN551009 | 551009 | 1 | - |

## Deaerators for large systems



### 551 DISCAL®

Steel body deareator.
To be coupled with flat counterflanges EN 1092-1.
**With insulation**.

Maximum working pressure: 10 bar
Maximum air discharge pressure: 10 bar
Finish: coated
Material: steel

| Code | Connection | | |
|---|---|---|---|
| **551**052 | DN 50 - PN 16 | 1 | - |
| **551**062 | DN 65 - PN 16 | 1 | - |
| **551**082 | DN 80 - PN 16 | 1 | - |
| **551**102 | DN 100 - PN 16 | 1 | - |
| **551**122 | DN 125 - PN 16 | 1 | - |
| **551**152 | DN 150 - PN 16 | 1 | - |



### 551 DISCAL®

Deaerator.
1/2″ F temperature probe connection.
To be coupled with flat counterflanges EN 1092-1.

Maximum working pressure: 10 bar
Maximum air discharge pressure: 10 bar
Medium temperature range: 0–110 °C
Finish: coated
Material: steel

| Code | Connection | | |
|---|---|---|---|
| **551**200 | DN 200 - PN 10 | 1 | - |
| **551**250 | DN 250 - PN 10 | 1 | - |
| **551**300 | DN 300 - PN 10 | 1 | - |

# Deaerators-Dirt separators

These are made by assembling, in a single product, a deaerator and a dirt separator. A single product can therefore be used both to separate air and to separate the impurities present in the system water.

**Operating principle**

The device makes use of the combined action of the deaerator and the dirt separator. The internal element creates swirling movements that facilitate the release of micro-bubbles and the subsequent creation of bubbles that then rise to the top of the device, from which they are evacuated by means of an automatic air vent with float. Moreover, the impurities in the water, striking against the surfaces of the internal element, are separated and fall to the bottom of the valve body.
Deaerators-dirt separators fitted with a magnet offer greater efficiency in the separation and collection of ferrous impurities. The impurities are captured inside the dirt separator body by the strong magnetic field created by the magnets inserted in the special outer ring.
With respect to the solutions that call for the installation of separate deaerators and dirt separators, the deaerators-dirt separators present the following advantages: they take up less space and require a smaller number of connections, and are therefore ideal for systems where it is not possible to install the two separate components. Nevertheless, two separate devices will always guarantee a higher performance level.

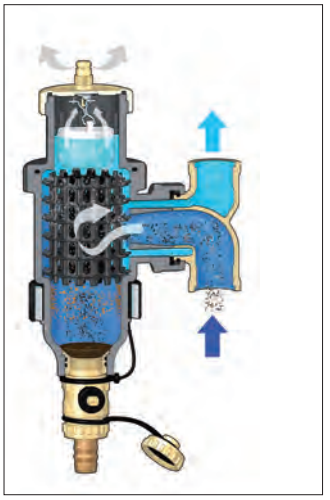

**Sizing**

Sizing a deaerator-dirt separator mainly depends on the speed at which the medium flows through the device, since an excessive speed would not allow correct separation of air and impurities.

As is known, the medium flow speed depends on the flow rate and the cross section. Remaining within the speed limits therefore means not exceeding certain **maximum** permissible **flow rates** for each size.

## HEAT PUMP SYSTEMS

### TECHNOPOLYMER DEAERATOR-DIRT SEPARATOR WITH MAGNET



**DISCALDIRTMAG®**
**5464**
3/4" – 1"–1 1/4"
Ø22 - Ø28



**DISCALDIRTMAG®**
**5464**
1 1/2" – 2"

## WALL-MOUNTED BOILER SYSTEMS WITH TECHNICAL ROOM - COOLING SYSTEMS

### BRASS DEAERATOR-DIRT SEPARATOR WITH MAGNET



**DISCALDIRTMAG®**
**5461**
3/4" – 1 1/4"

### TECHNOPOLYMER DEAERATOR-DIRT SEPARATOR WITH MAGNET



**DISCALDIRTMAG®**
**5464**
3/4" – 1"–1 1/4"



**DISCALDIRTMAG®**
**5464**
1 1/2" – 2"

## MEDIUM/LARGE SYSTEMS

### STEEL DEAERATOR-DIRT SEPARATOR WITH MAGNET



**DISCALDIRTMAG®**
**5461**
1 1/2" – 2"

### TECHNOPOLYMER DEAERATOR-DIRT SEPARATOR WITH MAGNET



**DISCALDIRTMAG®**
**5464**
1 1/2" – 2"

## LARGE SYSTEMS

### STEEL DEAERATOR-DIRT SEPARATOR



**DISCALDIRT®**
**546**
DN 50–DN 150



**DISCALDIRT®**
**546**
DN 200–DN 300

# DEARATORS-DIRT SEPARATORS

## Deaerators-dirt separators with magnet



### 5464 DISCALDIRTMAG

Deaerator-dirt separator with magnet.
**Adjustable for horizontal and vertical pipes**.
With hygroscopic safety cap.
Drain cock with hose connection.

Maximum working pressure: 3 bar
Medium temperature range: 0–90 °C
Material: technopolymer

| Code | Connection | | |
|---|---|---|---|
| **5464**05 | 3/4″F | 1 | 5 |
| **5464**06 | 1″F | 1 | 5 |
| **5464**07 | 1 1/4″F | 1 | 5 |
| **5464**02 | Ø 22 | 1 | 5 |
| **5464**03 | Ø 28 | 1 | 5 |



### 5464 DISCALDIRTMAG NEW

Deaerator-dirt separator with magnet.
**Adjustable for horizontal and vertical pipes**.
With hygroscopic safety cap.
Drain cock with hose connection.

Maximum working pressure: 3 bar
Medium temperature range: 0–90 °C
Material: technopolymer

| Code | Connection | | |
|---|---|---|---|
| **5464**08 | 1 1/2″F | 1 | - |
| **5464**09 | 2″F | 1 | - |



### 5464 NEW

Insulation for deaerator-dirt separator with magnet 5464 Series.

| Code | Article use | | |
|---|---|---|---|
| CBN546402 | 546402, 546403, 546405, 546406 | 1 | - |
| CBN546407 | 546407 | 1 | - |
| CBN546408 | 546408 | 1 | - |
| CBN546409 | 546409 | 1 | - |



### 5461 DISCALDIRTMAG

Deaerator-dirt separator with magnet.
Drain cock with hose connection.
Particle separation rating down to 5 µm.

Maximum working pressure: 10 bar
Maximum air discharge pressure: 10 bar
Medium temperature range: 0–110 °C
Material: brass

| Code | Connection | | |
|---|---|---|---|
| **5461**05 | 3/4″F | 1 | - |
| **5461**06 | 1″F | 1 | - |
| **5461**07 | 1 1/4″F | 1 | - |



### 546

Insulation for deaerators-dirt separators 5461 and 546 series.

| Code | Article use | | |
|---|---|---|---|
| CBN546002 | 546005, 546105 | 1 | - |
| CBN546007 | 546007, 546107 | 1 | - |



### 5461 DISCALDIRTMAG

Deaerator-dirt separator with magnet.
Drain cock with hose connection.
Particle separation rating down to 5 µm.
**With insulation**.

Maximum working pressure: 10 bar
Maximum air discharge pressure: 10 bar
Medium temperature range: 0–100 °C
Finish: coated
Material: steel

| Code | Connection | DN | | |
|---|---|---|---|---|
| **5461**18 | 1 1/2″F | DN 40 | 1 | - |
| **5461**19 | 2″F | DN 50 | 1 | - |

## Deaerators-dirt separators



# 546 DISCALDIRT®

Deaerator-dirt separator.
Drain cock with hose connection.
Particle separation rating down to 5 µm.

Maximum working pressure: 10 bar
Maximum air discharge pressure: 10 bar
Medium temperature range: 0–110 °C
Material: brass

| Code | Connection | | |
|---|---|---|---|
| **546**005 | 3/4" F | 1 | - |
| **546**006 | 1" F | 1 | - |
| **546**007 | 1 1/4" F | 1 | - |
| **546**002 | Ø 22 | 1 | - |



# 546

Insulation for deaerators-dirt separators 5461 and 546 series.

| Code | Article use | | |
|---|---|---|---|
| CBN546002 | 546005, 546105 | 1 | - |
| CBN546007 | 546007, 546107 | 1 | - |



# 546 DISCALDIRT®

Deaerator-dirt separator. Flanged connections.
Complete with drain valve.
Particle separation rating down to 5 µm.
To be coupled with flat counterflanges EN 1092-1.
**With insulation**.

Maximum working pressure: 10 bar
Maximum air discharge pressure: 10 bar
Finish: coated
Material: steel

| Code | Connection | Medium temperature range (°C) | | |
|---|---|---|---|---|
| **546**052 | DN 50 - PN 16 | 0–105 | 1 | - |
| **546**062 | DN 65 - PN 16 | 0–105 | 1 | - |
| **546**082 | DN 80 - PN 16 | 0–105 | 1 | - |
| **546**102 | DN 100 - PN 16 | 0–105 | 1 | - |
| **546**122 | DN 125 - PN 16 | 0–100 | 1 | - |
| **546**152 | DN 150 - PN 16 | 0–100 | 1 | - |



# 546 DISCALDIRT®

Deaerator-dirt separator.
1/2" F temperature probe connection.
Particle separation rating down to 5 µm.
To be coupled with flat counterflanges EN 1092-1.
Complete with drain valve.

Maximum working pressure: 10 bar
Maximum air discharge pressure: 10 bar
Medium temperature range: 0–110 °C
Finish: coated
Material: steel

| Code | Connection | | |
|---|---|---|---|
| **546**200 | DN 200 - PN 10 | 1 | - |
| **546**250 | DN 250 - PN 10 | 1 | - |
| **546**300 | DN 300 - PN 10 | 1 | - |

# DOMESTIC HOT WATER TREATMENT

## Polyphosphate dispenser



### 5459
### CALEFFI XP

Under-boiler polyphosphate dispenser.
Complete with polyphosphate crystal refill.
For domestic hot water circuit.
Average crystal refill shelf life: 35–40 m3 domestic hot water (data referring to water with an average hardness of 12°f, pH 7, temperature 20 °C and average domestic hot water usage).
Only use genuine refills code F0001503.
PATENT PENDING

Maximum working pressure: 6 bar
Medium temperature range: 5–30 °C
Ambient temperature range: 0–40 °C
Ambient temperature range: 0–40 °C
Material: brass
Finish: chrome plated

| Code | Inlet connection | Outlet connection | Notes | | |
|---|---|---|---|---|---|
| **5459**50 | 1/2″ M | 1/2″ F captive nut | - | 1 | 5 |
| **5459**51 | 1/2″ M | 1/2″ F captive nut | without crystal refill | 1 | 5 |

Check current national regulations for polyphosphate water treatment.



Polyphosphate crystal refill.
Complete with spare internal strainer.
For dispenser code 545950.

| Code | | |
|---|---|---|
| F0001503 | 1 | - |



### 5459

Insulation for polyphosphate dispenser.

| Code | | |
|---|---|---|
| CBN545950 | 1 | - |

**Installation on the domestic water circuit at the cold water inlet to the boiler.**

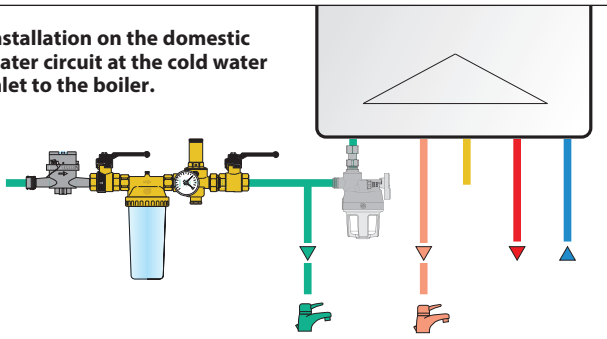

## Water treatment kit




### KIT5459

**Double X protection.**
Package complete with:
- Under-boiler magnetic filter (545900 code);
- Under-boiler polyphosphate dispenser (545950 code).

| Code | | |
|---|---|---|
| **KIT5459** | 1 | - |

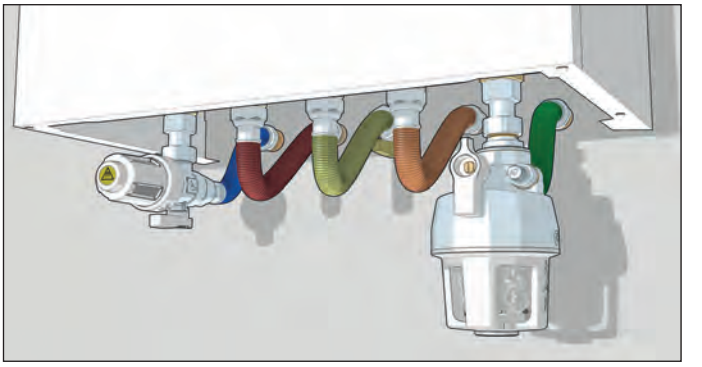

# WATER TREATMENT

## Chemical additives



### 5709 C3 CLEANER

Removes sludge, limescale and debris.
Dose: **0,5 litres of product every 150 litres of water in the system**.

BELGAQUA

| Code | Volume (l) | | |
|---|---|---|---|
| **570911** | 0,5 | 6 | - |



### 5709 C1 INHIBITOR

Protects against corrosion and limescale.
Dose: **0,5 litres of product every 150 litres of water in the system**.

BELGAQUA

| Code | Volume (l) | | |
|---|---|---|---|
| **570912** | 0,5 | 6 | - |



### 5709 C7 BIOCIDE

Prevents bacterial and fungal growth.
Dose: **0,5 litres of product every 150 litres of water in the system**.

| Code | Volume (l) | | |
|---|---|---|---|
| **570913** | 0,5 | 6 | - |



### 5709 C4 LEAK SEALER

Liquid sealer.
Dose: **0,5 litres of product every 150 litres of water in the system**.

| Code | Volume (l) | | |
|---|---|---|---|
| **570914** | 0,5 | 6 | - |



### 5709 C3 FAST CLEANER

Removes sludge, limescale and debris.
Dose: **0,4 litres of product every 150 litres of water in the system**.

BELGAQUA

| Code | Volume (l) | | |
|---|---|---|---|
| **570915** | 0,4 | 4 | - |



### 5709 C1 FAST INHIBITOR

Protects against corrosion and limescale.
Dose: **0,4 litres of product every 150 litres of water in the system**.

BELGAQUA

| Code | Volume (l) | | |
|---|---|---|---|
| **570916** | 0,4 | 4 | - |

**Treatment summary**

| | System cleaning | Washing and sanitising | Protection against corrosion and limescale | Protection against bacterial growth | Repair of microfissures |
|---|---|---|---|---|---|
| C3 CLEANER | ● | ● | | | |
| C3 FAST CLEANER | ● | ● | | | |
| C1 INHIBITOR | | | ● | | |
| C1 FAST INHIBITOR | | | ● | | |
| C7 BIOCIDE | | ● | | ● | |
| C4 LEAK SEALER | | | | | ● |

Cleaning and washing treatments: pour into the system and leave to circulate for the required time. Then drain the system to eliminate the impurities collected in the dirt separator.

Protective treatments: use in the system and check once a year.

Treatment "as needed" for minor leaks. Leave in the system.

## Compact water treatment units



### 580

Automatic water treatment unit for softening and demineralisation.
Complete with:
- positive displacement meter with built-in conductivity measuring cell;
- by-pass regulator;
- downstream ball shut-off valve;
- drain cock and air vent.

**With insulation**.

Maximum working pressure: 4 bar
Medium temperature range: 4–30 °C

| Code | Connection | | |
|---|---|---|---|
| **580**020 | 1/2" M | 1 | - |



### 580

Automatic compact charging unit to EN 1717 standard with type backflow preventer, shut-off valve, strainer, pressure test ports for controlling the backflow preventer, pressure reducing valve.
For horizontal or vertical installations.
**With insulation**.
Backflow preventer certified to EN 12729 standard.
Pressure reducing valve certified to EN 1567 standard.
PATENT

Maximum working pressure: 10 bar
Medium temperature range: 5–65 °C
Material: brass
Adjustment pressure range: 0,8–4 bar

| Code | Connection | | |
|---|---|---|---|
| **580**011 | 1/2" M | 1 | 6 |



Connection fitting with nut and gasket.

| Code | Connection | | |
|---|---|---|---|
| F0001298 | 3/4" F | 1 | - |

An automatic charging unit, if not already present, must be installed upstream of the treatment unit in order to keep the pressure below the maximum pressure value of the treatment cartridge.

To avoid water backflow from the heating system, which is polluted and hazardous for human health, it is indispensable to install an automatic charging unit with a backflow preventer. The correct use of hydraulic backflow preventers is governed by the European reference standard EN 1717 ("Protection against pollution of potable water in water installations and general requirements of devices to prevent pollution by backflow").

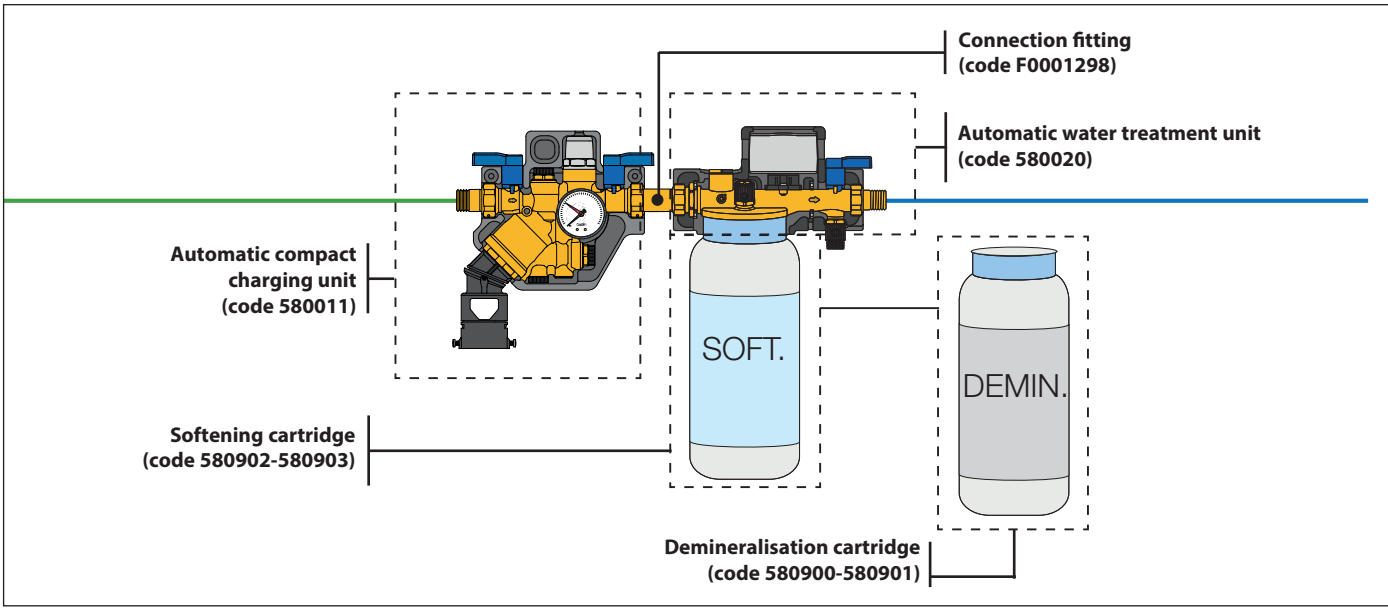

## Softening cartridges



### 580

Disposable **softening** cartridge.

Maximum working pressure: 4 bar
Medium temperature range: 4–30 °C
Warehouse storage temperature range: 0–40 °C

| Code | Notes | Nominal flow rate (l/min) | | |
|---|---|---|---|---|
| **580**902 | Sizing coefficient:<br>26 (hardness °f)<br>14 (hardness °dH) | 2 | 1 | - |
| **580**903 | Sizing coefficient:<br>43 (hardness °f)<br>24 (hardness °dH) | 4 | 1 | - |



### 5750

Hardness measurement kit.
Accuracy: 1 °f / 1 °dH.

| Code | | |
|---|---|---|
| **5750**03 | 1 | - |

**Softening cartridge sizing**
The volume of treatable water depends on the hardness of the filling water and must be calculated as follows:

$$\text{Volume of treatable water } (m^3) = \frac{\text{Dimensioning coefficient}}{\text{hardness IN - hardness OUT}}$$

hardness IN = raw water hardness (°f/°dH)
hardness OUT = treated water hardness (°f/°dH)

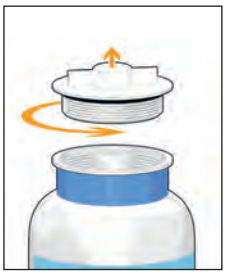

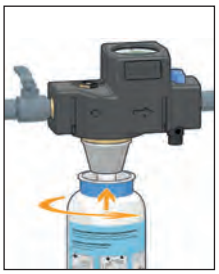



## Demineralisation cartridges



### 580

Disposable **demineralisation** cartridge.

Maximum working pressure: 4 bar
Medium temperature range: 4–30 °C
Warehouse storage temperature range: 0–40 °C

| Code | Notes | Nominal flow rate (l/min) | | |
|---|---|---|---|---|
| **580**900 | Sizing coefficient:<br>140 (residual cond. < 10 µS/cm)<br>220 (residual cond. < 50 µS/cm) | 2 | 1 | - |
| **580**901 | Sizing coefficient:<br>180 (residual cond. < 10 µS/cm)<br>280 (residual cond. < 50 µS/cm) | 4 | 1 | - |

**Demineralisation cartridge sizing**
The volume of treatable water depends on the electrical conductivity of the filling water, and must be calculated as follows:

$$\text{Volume of treatable water } (m^3) = \frac{\text{Sizing coefficient}}{\text{Electrical conductivity (µS/cm)}}$$









*Diagrams made with BIM families:* ***bim.caleffi.com***

**Convertible radiator valves**
**Convertible radiator valves with pre-setting**
**Thermostatic valves**
**Lockshield valves**
**Thermostatic control heads**
**Manual radiator valves**
**Remote thermal regulation system (CALEFFI CODE®)**
**Convertible radiator valves, control head and lockshield valves HIGH-STYLE**
**Wall-covering plates**
**Radiator valves for one-pipe and two-pipe systems**
**Fittings**
**Accessories for radiators**
**Spare parts for radiator valves**
**Valves for panel radiators**

# CONVERTIBLE RADIATOR VALVES

## Convertible radiator valves for copper pipes



### 338

Convertible radiator valve fitted for thermostatic control heads and thermo-electric actuator. Angled version.
For copper, plastic and multi-layer plastic pipe.

Maximum working pressure: 10 bar
Medium temperature range: 5–100 °C
Finish: chrome plated
Material: brass

| Code | Radiator connection | Pipe connection | Kv ($m^3/h$) | | |
|---|---|---|---|---|---|
| **338**302 | 3/8″ M | 23 p. 1,5 | 2,22 | 10 | 50 |
| **338**402 | 1/2″ M | 23 p. 1,5 | 2,70 | 10 | 50 |
| **338**452 | 1/2″ M | 3/4″ M | 2,70 | 10 | 50 |



### 339

Convertible radiator valve fitted for thermostatic control heads and thermo-electric actuator. Straight version.
For copper, plastic and multi-layer plastic pipes.

Maximum working pressure: 10 bar
Medium temperature range: 5–100 °C
Finish: chrome plated
Material: brass

| Code | Radiator connection | Pipe connection | Kv ($m^3/h$) | | |
|---|---|---|---|---|---|
| **339**302 | 3/8″ M | 23 p. 1,5 | 1,35 | 10 | 50 |
| **339**402 | 1/2″ M | 23 p. 1,5 | 1,79 | 10 | 50 |
| **339**452 | 1/2″ M | 3/4″ M | 1,79 | 10 | 50 |

## Convertible radiator valves for steel pipes



### 401

Convertible radiator valve fitted for thermostatic control heads, electronic and thermo-electric actuators. Angled version.
For steel pipes.

Maximum working pressure: 10 bar
Medium temperature range: 5–100 °C
Finish: chrome plated
Material: brass

| Code | Radiator connection | Pipe connection | Notes | Kv ($m^3/h$) | | |
|---|---|---|---|---|---|---|
| **401**302 | 3/8″ M | 3/8″ F | - | 2,22 | 10 | 50 |
| **401**402 | 1/2″ M | 1/2″ F | - | 2,70 | 10 | 50 |
| **401**500 | 3/4″ M | 3/4″ F | without rubber seal | 3,36 | 5 | 25 |
| **401**603 | 1″ M | 1″ F | without rubber seal | 4,47 | 5 | 25 |



### 402

Convertible radiator valve fitted for thermostatic control heads, electronic and thermo-electric actuators. Straight version.
For steel pipes.

Maximum working pressure: 10 bar
Medium temperature range: 5–100 °C
Finish: chrome plated
Material: brass

| Code | Radiator connection | Pipe connection | Notes | Kv ($m^3/h$) | | |
|---|---|---|---|---|---|---|
| **402**302 | 3/8″ M | 3/8″ F | - | 1,35 | 10 | 50 |
| **402**402 | 1/2″ M | 1/2″ F | - | 1,79 | 10 | 50 |
| **402**500 | 3/4″ M | 3/4″ F | without rubber seal | 2,58 | 5 | 25 |
| **402**603 | 1″ M | 1″ F | without rubber seal | 4,43 | 5 | 25 |

# CONVERTIBLE RADIATOR VALVES WITH PRE-SETTING

## Convertible radiator valves with pre-setting for copper pipes



### 425

Convertible radiator valve fitted for thermostatic control heads and thermo-electric actuators.
**With pre-setting**. Angled version.
For copper, plastic and multilayer plastic pipes.

Maximum working pressure: 10 bar
Medium temperature range: 5–100 °C
Finish: chrome plated
Material: brass

| Code | Radiator connection | Pipe connection | | |
|---|---|---|---|---|
| **425**302 | 3/8" M | 23 p. 1,5 | 10 | 50 |
| **425**402 | 1/2" M | 23 p. 1,5 | 10 | 50 |



### 426

Convertible radiator valve fitted for thermostatic control heads, electronic and thermo-electric actuators.
**With pre-setting.** Straight version.
For copper, plastic and multilayer plastic pipes.

Maximum working pressure: 10 bar
Medium temperature range: 5–100 °C
Finish: chrome plated
Material: brass

| Code | Radiator connection | Pipe connection | | |
|---|---|---|---|---|
| **426**302 | 3/8" M | 23 p. 1,5 | 10 | 50 |
| **426**402 | 1/2" M | 23 p. 1,5 | 10 | 50 |

## Convertible radiator valves with pre-setting for steel pipes



### 421

Convertible radiator valve fitted for thermostatic control heads, electronic and thermo-electric actuators.
**With pre-setting**. Angled version.
For steel pipes.

Maximum working pressure: 10 bar
Medium temperature range: 5–100 °C
Finish: chrome plated
Material: brass

| Code | Radiator connection | Pipe connection | Notes | | |
|---|---|---|---|---|---|
| **421**302 | 3/8" M | 3/8" F | - | 10 | 50 |
| **421**402 | 1/2" M | 1/2" F | - | 10 | 50 |
| **421**500 | 3/4" M | 3/4" F | without rubber seal | 1 | 25 |



### 422

Convertible radiator valve fitted for thermostatic control heads and thermo-electric actuators.
**With pre-setting.** Straight version.
For steel pipes.

Maximum working pressure: 10 bar
Medium temperature range: 5–100 °C
Finish: chrome plated
Material: brass

| Code | Radiator connection | Pipe connection | Notes | | |
|---|---|---|---|---|---|
| **422**302 | 3/8" M | 3/8" F | - | 10 | 50 |
| **422**402 | 1/2" M | 1/2" F | - | 10 | 50 |
| **422**500 | 3/4" M | 3/4" F | without rubber seal | 1 | 25 |

**Pre-setting device**
The convertible radiator valves are equipped with an internal device for pre-setting the head loss hydraulic characteristics.
Each passage cross section determines a specific Kv value for the creation of the head loss, which corresponds to a setting position on a graduated scale.

**Pre-setting device operation**
1- Remove the valve knob.

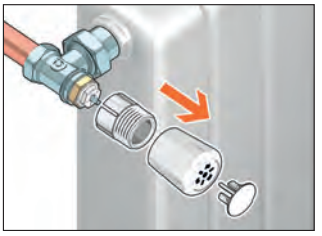

2- Lift the special control ring nut (supplied in package) of the pre-setting device and turn the control stem to select the required position on the graduated scale.

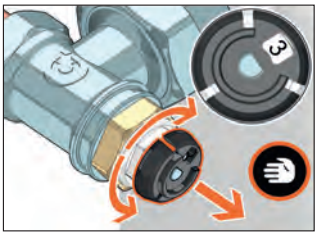

3- Lower the ring nut again.

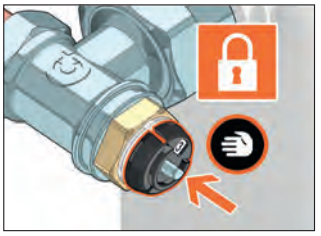

4- Position the manual knob, thermostatic control head or thermo-electric actuator on the valve.

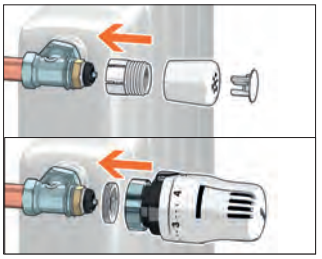

# THERMOSTATIC VALVES

## Thermostatic valves for copper pipes



### 222

Thermostatic radiator valve fitted for thermostatic and electronic control heads, thermo-electric actuators. Angled version.
For copper, single and multilayer plastic pipes.

Maximum working pressure: 10 bar
Medium temperature range: 5–100 °C
Finish: chrome plated
Material: brass

028

| Code | Radiator connection | Pipe connection | Kvs ($m^3/h$) | | |
|---|---|---|---|---|---|
| **222**302 | 3/8" M | 23 p. 1,5 | 2,29 | 10 | 50 |
| **222**402 | 1/2" M | 23 p. 1,5 | 2,39 | 10 | 50 |



### 223

Thermostatic radiator valve fitted for thermostatic and electronic control heads, thermo-electric actuators. Straight version.
For copper, single and multilayer plastic pipes.

Maximum working pressure: 10 bar
Medium temperature range: 5–100 °C
Finish: chrome plated
Material: brass

028

| Code | Radiator connection | Pipe connection | Kvs ($m^3/h$) | | |
|---|---|---|---|---|---|
| **223**302 | 3/8" M | 23 p. 1,5 | 1,09 | 10 | 50 |
| **223**402 | 1/2" M | 23 p. 1,5 | 1,52 | 10 | 50 |



### 226

Double-angled thermostatic radiator valve fitted for thermostatic control heads and thermo-electric actuators.
**Right-hand version**.
For copper, simple plastic and multi-layer plastic pipes.

Maximum working pressure: 10 bar
Medium temperature range: 5–100 °C
Material: brass
Finish: chrome plated

028

| Code | Radiator connection | Pipe connection | Kvs ($m^3/h$) | | |
|---|---|---|---|---|---|
| **226**312 | 3/8" M | 23 p. 1,5 | 0,96 | 1 | 20 |
| **226**412 | 1/2" M | 23 p. 1,5 | 1,40 | 1 | 20 |



### 226

Double-angled thermostatic radiator valve fitted for thermostatic control heads and thermo-electric actuators.
**Left-hand version**.
For copper, single and multilayer plastic pipes.

Maximum working pressure: 10 bar
Medium temperature range: 5–100 °C
Finish: chrome plated
Material: brass

028

| Code | Radiator connection | Pipe connection | Kvs ($m^3/h$) | | |
|---|---|---|---|---|---|
| **226**322 | 3/8" M | 23 p. 1,5 | 0,96 | 1 | 20 |
| **226**422 | 1/2" M | 23 p. 1,5 | 1,40 | 1 | 20 |



### 227

Thermostatic radiator valve fitted for thermostatic and electronic control heads, thermo-electric actuators. Reverse version.
For copper, single and multilayer plastic pipes.

Maximum working pressure: 10 bar
Medium temperature range: 5–100 °C
Finish: chrome plated
Material: brass

028

| Code | Radiator connection | Pipe connection | Kvs ($m^3/h$) | | |
|---|---|---|---|---|---|
| **227**402 | 1/2" M | 23 p. 1,5 | 1,39 | 1 | 20 |

The EN 215 certification covers the combination of codes 200000/200001 and 201, 204 series thermostatic control heads with valves 220, 221, 222, 223, 224, 225, 226 and 227 series.

## Thermostatic valves for steel pipes



### 220

Thermostatic radiator valve fitted for thermostatic and electronic control heads, thermo-electric actuators. Angled version.
For steel pipes.

Maximum working pressure: 10 bar
Medium temperature range: 5–100 °C
Finish: chrome plated
Material: brass

028

| Code | Radiator connection | Pipe connection | Notes | Kvs ($m^3/h$) | | |
|---|---|---|---|---|---|---|
| **220**302 | 3/8″ M | 3/8″ F | - | 2,29 | 10 | 50 |
| **220**402 | 1/2″ M | 1/2″ F | - | 2,39 | 10 | 50 |
| **220**500 | 3/4″ M | Rp 3/4″ F | without rubber seal | 3,19 | 5 | 25 |



### 221

Thermostatic radiator valve fitted for thermostatic and electronic control heads, thermo-electric actuators. Straight version.
For steel pipes.

Maximum working pressure: 10 bar
Medium temperature range: 5–100 °C
Finish: chrome plated
Material: brass

028

| Code | Radiator connection | Pipe connection | Notes | Kvs ($m^3/h$) | | |
|---|---|---|---|---|---|---|
| **221**302 | 3/8″ M | Rp 3/8″ F | - | 1,09 | 10 | 50 |
| **221**402 | 1/2″ M | Rp 1/2″ F | - | 1,52 | 10 | 50 |
| **221**500 | 3/4″ M | 3/4″ F | without rubber seal | 2,20 | 5 | 25 |



### 225

Double angled thermostatic radiator valve fitted for thermostatic and electronic control heads, thermo-electric actuators.
**Right-hand version**.
For steel pipes.

Maximum working pressure: 10 bar
Medium temperature range: 5–100 °C
Finish: chrome plated
Material: brass

028

| Code | Radiator connection | Pipe connection | Kvs ($m^3/h$) | | |
|---|---|---|---|---|---|
| **225**312 | 3/8″ M | Rp 3/8″ F | 0,96 | 1 | 20 |
| **225**412 | 1/2″ M | Rp 1/2″ F | 1,40 | 1 | 20 |



### 225

Double angled thermostatic radiator valve fitted for thermostatic and electronic control heads, thermo-electric actuators.
**Left-hand version**.
For steel pipes.

Maximum working pressure: 10 bar
Medium temperature range: 5–100 °C
Finish: chrome plated
Material: brass

028

| Code | Radiator connection | Pipe connection | Kvs ($m^3/h$) | | |
|---|---|---|---|---|---|
| **225**322 | 3/8″ M | 3/8″ F | 0,96 | 1 | 20 |
| **225**422 | 1/2″ M | 1/2″ F | 1,40 | 1 | 20 |



### 224

Thermostatic radiator valve fitted for thermostatic and electronic control heads, thermo-electric actuators. Reverse version.
For steel pipes.

Maximum working pressure: 10 bar
Medium temperature range: 5–100 °C
Finish: chrome plated
Material: brass

028

| Code | Radiator connection | Pipe connection | Kvs ($m^3/h$) | | |
|---|---|---|---|---|---|
| **224**302 | 3/8″ M | Rp 3/8″ F | 0,93 | 1 | 20 |
| **224**402 | 1/2″ M | Rp 1/2″ F | 1,39 | 1 | 20 |

The EN 215 certification covers the combination of codes 200000/200001 and 201, 204 series thermostatic control heads with valves 220, 221, 222, 223, 224, 225, 226 and 227 series.

## Dynamic thermostatic radiator valves for copper pipes



### 232 DYNAMICAL®

Dynamic thermostatic radiator valve fitted for thermostatic and electronic control heads, thermo-electric actuators. Angled version.
For copper, single and multilayer plastic pipes.
PATENT

Maximum working pressure: 10 bar
Medium temperature range: 5–95 °C
Finish: chrome plated
Material: brass

| Code | Radiator connection | Pipe connection | Notes | Flow rate regulation (l/h) | | |
|---|---|---|---|---|---|---|
| **232**302 | 3/8" M | 23 p. 1,5 | - | 20–120 | 10 | 50 |
| **232**402 | 1/2" M | 23 p. 1,5 | - | 20–120 | 10 | 50 |
| **232**412 | 1/2" M | 23 p. 1,5 | low flow version | 10–80 | 10 | 50 |



### 233 DYNAMICAL®

Dynamic thermostatic radiator valve fitted for thermostatic and electronic control heads, thermo-electric actuators. Straight version.
For copper, single and multilayer plastic pipes.
PATENT

Maximum working pressure: 10 bar
Medium temperature range: 5–95 °C
Finish: chrome plated
Material: brass

| Code | Radiator connection | Pipe connection | Notes | Flow rate regulation (l/h) | | |
|---|---|---|---|---|---|---|
| **233**302 | 3/8" M | 23 p. 1,5 | - | 20–120 | 10 | 50 |
| **233**402 | 1/2" M | 23 p. 1,5 | - | 20–120 | 10 | 50 |
| **233**412 | 1/2" M | 23 p. 1,5 | low flow version | 10–80 | 10 | 50 |



### 237 DYNAMICAL®

Dynamic thermostatic radiator valve fitted for thermostatic and electronic control heads, thermo-electric actuators. Reverse version.
For copper, single and multilayer plastic pipes.
PATENT

Maximum working pressure: 10 bar
Medium temperature range: 5–95 °C
Finish: chrome plated
Material: brass

| Code | Radiator connection | Pipe connection | Flow rate regulation (l/h) | | |
|---|---|---|---|---|---|
| **237**302 | 3/8" M | 23 p. 1,5 | 20–120 | 5 | 25 |
| **237**402 | 1/2" M | 23 p. 1,5 | 20–120 | 5 | 25 |

## Dynamic thermostatic radiator valves for steel pipes



### 230 DYNAMICAL®

Dynamic thermostatic radiator valve fitted for thermostatic and electronic control heads, thermo-electric actuators. Angled version.
For steel pipe.
PATENT

Maximum working pressure: 10 bar
Medium temperature range: 5–95 °C
Finish: chrome plated
Material: brass

| Code | Radiator connection | Pipe connection | Notes | Flow rate regulation (l/h) | | |
|---|---|---|---|---|---|---|
| **230**302 | 3/8" M | 3/8" F | - | 20–120 | 10 | 50 |
| **230**312 | 3/8" M | 3/8" F | low flow version | 10–80 | 10 | 50 |
| **230**402 | 1/2" M | 1/2" F | - | 20–120 | 10 | 50 |
| **230**412 | 1" M | 1/2" F | low flow version | 10–80 | 10 | 50 |
| **230**500 | 3/4" M | 3/4" F | without rubber seal | 20–120 | 5 | 25 |



### 231 DYNAMICAL®

Dynamic thermostatic radiator valve fitted for thermostatic and electronic control heads, thermo-electric actuators. Straight version.
For steel pipe.
PATENT

Maximum working pressure: 10 bar
Medium temperature range: 5–95 °C
Finish: chrome plated
Material: brass

| Code | Radiator connection | Pipe connection | Notes | Flow rate regulation (l/h) | | |
|---|---|---|---|---|---|---|
| **231**302 | 3/8" M | 3/8" F | - | 20–120 | 10 | 50 |
| **231**312 | 3/8" M | 3/8" F | low flow version | 10–80 | 10 | 50 |
| **231**402 | 1/2" M | 1/2" F | - | 20–120 | 10 | 50 |
| **231**412 | 1/2" M | 1/2" F | low flow version | 10–80 | 10 | 50 |
| **231**500 | 3/4" M | 3/4" F | without rubber seal | 20–120 | 5 | 25 |



### 234 DYNAMICAL®

Dynamic thermostatic radiator valve fitted for thermostatic and electronic control heads, thermo-electric actuators. Reverse version.
For steel pipe.
PATENT

Maximum working pressure: 10 bar
Medium temperature range: 5–95 °C
Finish: chrome plated
Material: brass

| Code | Radiator connection | Pipe connection | Flow rate regulation (l/h) | | |
|---|---|---|---|---|---|
| **234**302 | 3/8" M | 3/8" F | 20–120 | 5 | 25 |
| **234**402 | 1/2" M | 1/2" F | 20–120 | 5 | 25 |

# LOCKSHIELD VALVES

## Lockshield valves for copper pipes



### 342

Lockshield valve. Angled.
For copper, plastic and multi-layer plastic pipe.

Maximum working pressure: 10 bar
Medium temperature range: 5–100 °C
Finish: chrome plated
Material: brass

| Code | Radiator connection | Pipe connection | Kvs ($m^3/h$) | | |
|---|---|---|---|---|---|
| **342**302 | 3/8″ M | 23 p. 1,5 | 2,42 | 10 | 50 |
| **342**402 | 1/2″ M | 23 p. 1,5 | 3,99 | 10 | 50 |
| **342**452 | 1/2″ M | 3/4″ M | 3,99 | 10 | 50 |



### 343

Lockshield valve. Straight.
For copper, plastic and multi-layer plastic pipe.

Maximum working pressure: 10 bar
Medium temperature range: 5–100 °C
Finish: chrome plated
Material: brass

| Code | Radiator connection | Pipe connection | Kvs ($m^3/h$) | | |
|---|---|---|---|---|---|
| **343**302 | 3/8″ M | 23 p. 1,5 | 1,32 | 10 | 50 |
| **343**402 | 1/2″ M | 23 p. 1,5 | 2,17 | 10 | 50 |
| **343**452 | 1/2″ M | 3/4″ M | 2,17 | 10 | 50 |



### 226

Double-angled lockshield valve.
**Right-hand version**.
For copper, simple plastic and multi-layer plastic pipes.

Maximum working pressure: 10 bar
Medium temperature range: 5–100 °C
Finish: chrome plated
Material: brass

| Code | Radiator connection | Pipe connection | Kvs ($m^3/h$) | | |
|---|---|---|---|---|---|
| **226**352 | 3/8″ M | 23 p. 1,5 | 1,35 | 1 | 20 |
| **226**452 | 1/2″ M | 23 p. 1,5 | 1,40 | 1 | 20 |



### 226

Double-angled lockshield valve.
**Left-hand version**.
For copper, simple plastic and multi-layer plastic pipes.

Maximum working pressure: 10 bar
Medium temperature range: 5–100 °C
Finish: chrome plated
Material: brass

| Code | Radiator connection | Pipe connection | Kvs ($m^3/h$) | | |
|---|---|---|---|---|---|
| **226**362 | 3/4″ M | 23 p. 1,5 | 1,35 | 1 | 20 |
| **226**462 | 1/2″ M | 23 p. 1,5 | 1,40 | 1 | 20 |

## Lockshield valves for steel pipes



### 431

Lockshield valve. Angled.
For steel pipe.

Maximum working pressure: 10 bar
Medium temperature range: 5–100 °C
Finish: chrome plated
Material: brass

| Code | Radiator connection | Pipe connection | Notes | Kvs ($m^3/h$) | | |
|---|---|---|---|---|---|---|
| **431**302 | 3/8″ M | 3/8″ F | - | 2,42 | 10 | 50 |
| **431**402 | 1/2″ M | 1/2″ F | - | 3,99 | 10 | 50 |
| **431**503 | 3/4″ M | 3/4″ F | without rubber seal | 4,52 | 5 | 25 |
| **431**603 | 1″ M | 1″ F | without rubber seal | 5,64 | 5 | 25 |



### 432

Lockshield valve. Straight.
For steel pipes.

Maximum working pressure: 10 bar
Medium temperature range: 5–100 °C
Finish: chrome plated
Material: brass

| Code | Radiator connection | Pipe connection | Notes | Kvs ($m^3/h$) | | |
|---|---|---|---|---|---|---|
| **432**302 | 3/8″ M | 3/8″ F | - | 1,32 | 10 | 50 |
| **432**402 | 1/2″ M | 1/2″ F | - | 2,17 | 10 | 50 |
| **432**503 | 3/4″ M | 3/4″ F | without rubber seal | 2,58 | 5 | 25 |
| **432**603 | 1″ M | 1″ F | without rubber seal | 4,81 | 5 | 25 |



### 225

Double-angled lockshield valve. Right-hand version.
For steel pipes.

Maximum working pressure: 10 bar
Medium temperature range: 5–100 °C
Finish: chrome plated
Material: brass

| Code | Radiator connection | Pipe connection | Kvs ($m^3/h$) | | |
|---|---|---|---|---|---|
| **225**352 | 3/8″ M | 3/8″ F | 1,05 | 1 | 20 |
| **225**452 | 1/2″ M | 1/2″ F | 1,40 | 1 | 20 |



### 225

Double-angled lockshield valve. Left-hand version.
For steel pipes.

Maximum working pressure: 10 bar
Medium temperature range: 5–100 °C
Finish: chrome plated
Material: brass

| Code | Radiator connection | Pipe connection | Kvs ($m^3/h$) | | |
|---|---|---|---|---|---|
| **225**362 | 3/8″ M | 3/8″ F | 1,05 | 1 | 20 |
| **225**462 | 1/2″ M | 1/2″ F | 1,40 | 1 | 20 |

# THERMOSTATIC CONTROL HEADS

## Thermostatic control heads with built-in sensor



### 200

Thermostatic control head for convertible radiator valves, built-in sensor with liquid-filled element.
Graduated scale from ❄ to 5 corresponding to a temperature adjustment range from 7 °C to 28 °C.
With adapter.

| Code | | |
|---|---|---|
| **200**000 | 10 | 50 |



### 200

Thermostatic control head for convertible radiator valves, built-in sensor with liquid-filled element.
Graduated scale from ❄ to 5 corresponding to a temperature adjustment range from 7 °C to 28 °C.

| Code | | |
|---|---|---|
| **200**001 | 1 | 10 |



### 204

Thermostatic control head for convertible radiator valves.
Built-in sensor with liquid-filled element.
Graduated scale from ❄ to 5 corresponding to a temperature adjustment range from 7 °C to 28 °C.
With adapter.

| Code | | |
|---|---|---|
| **204**000 | 10 | 50 |



### 202

Thermostatic control head for radiator valves, built-in sensor with liquid-filled element.
With LCD type ambient temperature indicator.
Graduated scale from ❄ to 5 corresponding to a temperature adjustment range from 7 °C to 28 °C.
Ambient temperature indicator from 16 °C to 26 °C.
With adapter.
PATENT

| Code | | |
|---|---|---|
| **202**000 | 1 | 5 |

For 338, 339, 401, 402, 425, 426, 421, 422, 455, 456, 230, 231, 232, 233, 234, 237, 220, 221, 222, 223, 224, 225, 226 and 227 series valves.

## Thermostatic control heads with remote sensor



### 201

Thermostatic control head for thermostatic and convertible radiator valves, with remote sensor.
Graduated scale from ❄ to 5 corresponding to a temperature adjustment range from 7 °C to 28 °C.
With adapter.

Capillary length: 2 m

| Code | | |
|---|---|---|
| **201**000 | 1 | 10 |



### 204

Thermostatic control head for thermostatic and convertible radiator valves.
With remote sensor.
Graduated scale from ❄ to 5 corresponding to a temperature adjustment range from 7 °C to 28 °C.
With adapter.

Capillary length: 2 m

| Code | | |
|---|---|---|
| **204**100 | 1 | 10 |

For 338, 339, 401, 402, 425, 426, 421, 422, 455, 456, 230, 231, 232, 233, 234, 237, 220, 221, 222, 223, 224, 225, 226 and 227 series valves.

## Thermostatic control heads with contact probe



### 203

Thermostatic control head for thermostatic and convertible radiator valves; with contact probe, for medium temperature limiting.
With adapter.
Pre-set temperature scale.

Capillary length: 2 m

| Code | Medium temperature range (°C) | | |
|---|---|---|---|
| **203**502 | 20–50 | 1 | 25 |
| **203**702 | 40–90 | 1 | - |

For valves 220, 221, 222, 223, 224, 225, 226, 227, 338, 339, 401, 402 and 455 series.

## Thermostatic control head with remote adjusting knob



### 472

Thermostatic control head with remote adjusting knob, liquid-filled element.

Adjustment temperature range: 6-28 °C
Capillary length: 2 m

| Code | | |
|---|---|---|
| **472**000 | 1 | - |

## Accessories for thermostatic control heads



### 209

Tamper-proof anti-theft cap for use in public places.
**To be used with special allen key code 209001.**
For thermostatic control heads 200, 204, 202 and 205 series.

Finish: white

| Code | | |
|---|---|---|
| **209**000 | 1 | 10 |



### 209

Tamper-proof anti-theft cap for use in public places.
For thermostatic control heads 200 series.
To be used with special allen key code 209001.

Finish: chrome plated

| Code | | |
|---|---|---|
| **209**004 | 1 | 10 |



### 209

Special allen key for tamper-proof anti-theft cap.
To be used with tamper-proof cap 209 series.

| Code | | |
|---|---|---|
| **209**001 | 1 | - |



### 475

Contact probe mounting bracket.
For thermostatic control heads 203 series.

| Code | | |
|---|---|---|
| **475**001 | 1 | - |



### 475

Probe pocket.
For thermostatic control heads 203 series.

| Code | Article use | | |
|---|---|---|---|
| **475**002 | 203502 | 1 | - |
| **475**003 | 203702 | 1 | - |

# MANUAL RADIATOR VALVES

## Radiator valves for copper pipes



### 340

Manual radiator valve. Angled version.
For copper, plastic and multilayer plastic pipes.

Maximum working pressure: 10 bar
Medium temperature range: 5–100 °C
Finish: chrome plated
Material: brass

| Code | Radiator connection | Pipe connection | Kv ($m^3/h$) | | |
|---|---|---|---|---|---|
| **340**302 | 3/8" M | 23 p. 1,5 | 2,42 | 10 | 50 |
| **340**402 | 1/2" M | 23 p. 1,5 | 3,99 | 10 | 50 |
| **340**452 | 1/2" M | 3/4" M | 3,99 | 10 | 50 |



### 341

Manual radiator valve. Straight version.
For copper, plastic and multilayer plastic pipes.

Maximum working pressure: 10 bar
Medium temperature range: 5–100 °C
Finish: chrome plated
Material: brass

| Code | Radiator connection | Pipe connection | Kv ($m^3/h$) | | |
|---|---|---|---|---|---|
| **341**302 | 3/8" M | 23 p. 1,5 | 1,32 | 10 | 50 |
| **341**402 | 1/2" M | 23 p. 1,5 | 2,17 | 10 | 50 |

## Radiator valves for steel pipes



### 411

Manual radiator valve. Angled version.
For steel pipe.

Maximum working pressure: 10 bar
Medium temperature range: 5–100 °C
Finish: chrome plated
Material: brass

| Code | Radiator connection | Pipe connection | Notes | Kv ($m^3/h$) | | |
|---|---|---|---|---|---|---|
| **411**302 | 3/8" M | 3/8" F | - | 2,42 | 10 | 50 |
| **411**402 | 1/2" M | 1/2" F | - | 3,99 | 10 | 50 |
| **411**422 | 1/2" M | 1/2" F | with chrome plated knob | 3,99 | 10 | 50 |



### 412

Manual radiator valve. Straight version.
For steel pipe.

Maximum working pressure: 10 bar
Medium temperature range: 5–100 °C
Finish: chrome plated
Material: brass

| Code | Radiator connection | Pipe connection | Notes | Kv ($m^3/h$) | | |
|---|---|---|---|---|---|---|
| **412**302 | 3/8" M | 3/8" F | - | 1,32 | 10 | 50 |
| **412**402 | 1/2" M | 1/2" F | - | 2,17 | 10 | 50 |
| **412**422 | 1/2" M | 1/2" F | with chrome plated knob | 2,17 | 10 | 50 |
| **412**503 | 3/4" M | 3/4" F | without rubber seal | 2.58 | 5 | 25 |

## Lockshield valves for copper pipes



### 342

Lockshield valve. Angled.
For copper, plastic and multi-layer plastic pipe.

Maximum working pressure: 10 bar
Medium temperature range: 5–100 °C
Finish: chrome plated
Material: brass

| Code | Radiator connection | Pipe connection | Kvs ($m^3/h$) | | |
|---|---|---|---|---|---|
| **342**302 | 3/8″ M | 23 p. 1,5 | 2,42 | 10 | 50 |
| **342**402 | 1/2″ M | 23 p. 1,5 | 3,99 | 10 | 50 |
| **342**452 | 1/2″ M | 3/4″ M | 3,99 | 10 | 50 |



### 343

Lockshield valve. Straight.
For copper, plastic and multi-layer plastic pipe.

Maximum working pressure: 10 bar
Medium temperature range: 5–100 °C
Finish: chrome plated
Material: brass

| Code | Radiator connection | Pipe connection | Kvs ($m^3/h$) | | |
|---|---|---|---|---|---|
| **343**302 | 3/8″ M | 23 p. 1,5 | 1,32 | 10 | 50 |
| **343**402 | 1/2″ M | 23 p. 1,5 | 2,17 | 10 | 50 |

## Lockshield valves for steel pipes



### 431

Lockshield valve. Angled.
For steel pipe.

Maximum working pressure: 10 bar
Medium temperature range: 5–100 °C
Finish: chrome plated
Material: brass

| Code | Radiator connection | Pipe connection | Notes | Kvs ($m^3/h$) | | |
|---|---|---|---|---|---|---|
| **431**302 | 3/8″ M | 3/8″ F | - | 2,42 | 10 | 50 |
| **431**402 | 1/2″ M | 1/2″ F | - | 3,99 | 10 | 50 |
| **431**422 | 1/2″ M | 1/2″ F | with chrome plated knob | 3,99 | 10 | 50 |
| **431**503 | 3/4″ M | 3/4″ F | without rubber seal | 4,52 | 5 | 25 |
| **431**603 | 1″ M | 1″ F | without rubber seal | 5,64 | 5 | 25 |



### 432

Lockshield valve. Straight.
For steel pipes.

Maximum working pressure: 10 bar
Medium temperature range: 5–100 °C
Finish: chrome plated
Material: brass

| Code | Radiator connection | Pipe connection | Notes | Kvs ($m^3/h$) | | |
|---|---|---|---|---|---|---|
| **432**302 | 3/8″ M | 3/8″ F | - | 1,32 | 10 | 50 |
| **432**402 | 1/2″ M | 1/2″ F | - | 2,17 | 10 | 50 |
| **432**422 | 1/2″ M | 1/2″ F | with chrome plated knob | 2,17 | 10 | 50 |
| **432**503 | 3/4″ M | 3/4″ F | without rubber seal | 2,58 | 5 | 25 |
| **432**603 | 1″ M | 1″ F | without rubber seal | 4,81 | 5 | 25 |

# REMOTE THERMAL REGULATION SYSTEM (CALEFFI CODE®)

## Remote thermal regulation system, white



### 215 CALEFFI CODE®

**Comfort control**
Wireless electronic control for thermostatic or convertible radiator valves.
Complete with 2 x 1,5 V AA batteries (included in pack).
Operates through Gateway, Gateway PRO, app CALEFFI CODE® and front buttons.
Built-in temperature sensor.
Quick-coupling installation with adapter.
Compatible with rechargeable batteries.
REGISTERED DESIGN.

Ambient temperature range: 0–55 °C
Electric supply: with battery (2 x 1,5V)
Protection class: IP 30
Finish: white
Transmission radio frequency: RF 868 MHz radio

CE

| Code | | |
|---|---|---|
| **215**510 | 1 | 20 |



### 215 CALEFFI CODE®

**Sensor/ Sensor PRO**
Sensor Wireless ambient temperature, **PRO version with boiler contact**.
Complete with 2 x 1,5 V AAA batteries (included in pack).
Operates through Gateway, Gateway PRO and the CALEFFI CODE® app.
Compatible with rechargeable batteries.
REGISTERED DESIGN

Ambient temperature range: 0–55 °C
Electric supply: with battery (2 x 1,5V)
Protection class: IP 30
Finish: white
Transmission radio frequency: RF 868 MHz radio

CE

| Code | Notes | | |
|---|---|---|---|
| **215**001 | **Sensor** | 1 | 20 |
| **215**002 | Sensor PRO with boiler contact | 1 | 20 |

Ambient temperature Sensor/Sensor PRO is mandatory for application with single-pipe valves.



### 215 CALEFFI CODE®

**Gateway / Gateway PRO**
Wireless multi-zone temperature regulation gateway, **PRO version with built-in GSM, UMTS, LTE modem**.
Operation through the CALEFFI CODE® app (Wi-Fi or Ethernet and Bluetooth® connectivity required for installation).
Quick functions: Auto - Eco - Holiday - Manual - OFF - Boost - Clean.
Weekly programming.
Programmable time bands, up to 8 per day.
Programmable zones: up to 64.
Compatible with OpenTherm ® connectivity.
Ecodesign Directive Class: IV-VIII
Electric supply with USB type C power supply unit, 5 V (DC), 2 A, input 100–240 V, 0,5 A, 50/ 60 Hz, output 5 V, 2 A (EN/IEC 61558-2- 16).
REGISTERED DESIGN.

Ambient temperature range: 0–40 °C
Protection class: IP 30
Contact rating (24 V): 1 A
Finish: white
Transmission radio frequency: RF 868 MHz radio, Wi-Fi, 2.4 GHz

CE

| Code | Notes | | |
|---|---|---|---|
| **215**100 | **Gateway** | 1 | 12 |
| **215**015 | **Gateway PRO** with built-in GSM, UMTS, LTE modem. | 1 | 12 |

Scarica su App Store
DISPONIBILE SU Google Play

*Compatible with:*
amazon alexa
Google Home

**REMOTE THERMAL REGULATION SYSTEM**
The CALEFFI CODE® system guarantees more efficient management of the heating system, giving the user greater savings and the possibility of modifying the programming at any time and from anywhere according to actual needs.
Suitable for managing an independent residence or a unit in an apartment block.

**CALEFFI CODE® App**
The system is configured and managed exclusively through the CALEFFI CODE® app for smartphones and tablets (Android® or iOS®) with available internet and Bluetooth® connections.
The system can be controlled by two devices simultaneously, with the CALEFFI CODE® App installed on each device.

## Remote thermal regulation system, black



### 215 CALEFFI CODE®

**Comfort control.**
Wireless electronic control for thermostatic or convertible radiator valves.
Complete with 2 x 1,5 V AA batteries (included in pack).
Operates through Gateway, Gateway PRO, app CALEFFI CODE® and front buttons.
Built-in temperature sensor.
Compatible with rechargeable batteries.
REGISTERED DESIGN.

Ambient temperature range: 0–55 °C
Electric supply: with battery (2 x 1,5V)
Protection class: IP 30
Transmission radio frequency: RF 868 MHz radio

CE

| Code | | |
|---|---|---|
| **215**510 BLK | 1 | 20 |



### 215 CALEFFI CODE®

**Sensor / Sensor PRO**
Sensor Wireless ambient temperature sensor, PRO version with boiler contact.
Complete with 2 x 1,5 V AAA batteries (included in pack).
Operates through Gateway, Gateway PRO and the CALEFFI CODE® app.
Compatible with rechargeable batteries.
REGISTERED DESIGN.

Ambient temperature range: 0–55 °C
Electric supply: with battery (2 x 1,5V)
Protection class: IP 30
Finish: black
Transmission radio frequency: RF 868 MHz radio

CE

| Code | Notes | | |
|---|---|---|---|
| **215**001 BLK | **Sensor** | 1 | 20 |
| **215**002 BLK | **Sensor PRO** with boiler contact | 1 | 20 |

Ambient temperature Sensor/Sensor PRO is mandatory for application with single-pipe valves.



### 215 CALEFFI CODE®

**Gateway / Gateway PRO**
Wireless multi-zone temperature regulation gateway, **PRO version with built-in GSM, UMTS, LTE modem**.
Operation through the CALEFFI CODE® app (Wi-Fi or Ethernet and Bluetooth® connectivity required for installation).
Quick functions: Auto - Eco - Holiday - Manual - OFF - Boost - Clean.
Weekly programming.
Programmable time bands, up to 8 per day.
Programmable zones: up to 64.
Compatible with OpenTherm ® connectivity.
Ecodesign Directive Class: IV-VIII
REGISTERED DESIGN.
Electric supply with USB type C power supply unit, 5 V (DC), 2 A, input 100–240 V, 0,5 A, 50/ 60 Hz, output 5 V, 2 A (EN/IEC 61558-2- 16).

Ambient temperature range: 0–40 °C
Protection class: IP 30
Contact rating (24 V): 1 A
Finish: black
Transmission radio frequency: RF 868 MHz radio, Wi-Fi, 2.4 GHz

CE

| Code | Notes | | |
|---|---|---|---|
| **215**100 BLK | **Gateway** | 1 | 12 |
| **215**015 BLK | **Gateway PRO** with built-in GSM, UMTS, LTE modem. | 1 | 12 |

## Accessories for CALEFFI CODE



### 210

Accessories for thermal regulation electronic system 215 series.

| Code | | |
|---|---|---|
| **210**005 | 1 | 10 |



### 210

Adapters for thermostatic and convertibles valves not produced by our company.
For RBM - Heimeier - Tiemme - Watts thermostatic valves with M30x1.5mm connection, use the adapter provided.

| Code | Notes | | |
|---|---|---|---|
| **210**051 | for Giacomini valves | 1 | - |
| **210**052 | for FAR valves | 1 | - |
| **210**053 | for RBM-Heimeier-Tiemme-Watts valves | 1 | - |
| F0001597 | Danfoss valves | 10 | - |

Not suitable for use with one-pipe valves.

# CONVERTIBLE RADIATOR VALVES, CONTROL HEAD AND LOCKSHIELD VALVES HIGH-STYLE

## Convertible radiator valves, white finish

### 4001

High-Style convertible radiator valves.
Complete with:
- angled-convertible radiator valve fitted for thermostatic and thermo-electric control heads;
- angled lockshield valve;
- two pipe-covering/ wall-covering shells and allen key.

To be used with fittings 437, 447, 681 and 679 series.

Maximum working pressure: 10 bar
Medium temperature range: 5–100 °C
Finish: white
Material: brass



| Code | Radiator connection | Pipe connection | Kv valve ($m^3/h$) | Kv lockshield valve ($m^3/h$) | | |
|---|---|---|---|---|---|---|
| **4001**01 | 1/2" M | 23 p. 1,5 | 2,0 | 1,92 | 1 | 5 |

### 4003

High-Style convertible radiator valves and lockshield valves for designer radiators. Double-angled. **Right-hand version**.
Complete with:
- double-angled convertible radiator valve fitted for thermostatic and thermo-electric control heads;
- lockshield valve, double-angled connections;
- two pipe-covering/wall-covering shells and allen key.

To be used with fittings 437, 447, 681 and 679 series.

Maximum working pressure: 10 bar
Medium temperature range: 5–100 °C
Finish: white
Material: brass



| Code | Radiator connection | Pipe connection | Kv valve ($m^3/h$) | Kv lockshield valve ($m^3/h$) | | |
|---|---|---|---|---|---|---|
| **4003**01 | 1/2" M | 23 p. 1,5 | 1,27 | 1,37 | 1 | 5 |

### 4004

High-Style convertible radiator valves and lockshield valves for designer radiators. Double-angled. **Left-hand version**.
Complete with:
- double-angled convertible radiator valve fitted for thermostatic and thermo-electric control heads;
- lockshield valve, double-angled connections;
- two pipe-covering/wall-covering shells and allen key.

To be used with fittings 437, 447, 681 and 679 series.

Maximum working pressure: 10 bar
Medium temperature range: 5–100 °C
Finish: white
Material: brass



| Code | Radiator connection | Pipe connection | Kv valve ($m^3/h$) | Kv lockshield valve ($m^3/h$) | | |
|---|---|---|---|---|---|---|
| **4004**01 | 1/2" M | 23 p. 1,5 | 1,27 | 1,37 | 1 | 5 |

**Example of HIGH-STYLE valve installation for designer heating systems with central connection, left-hand version, with thermostatic control head.**

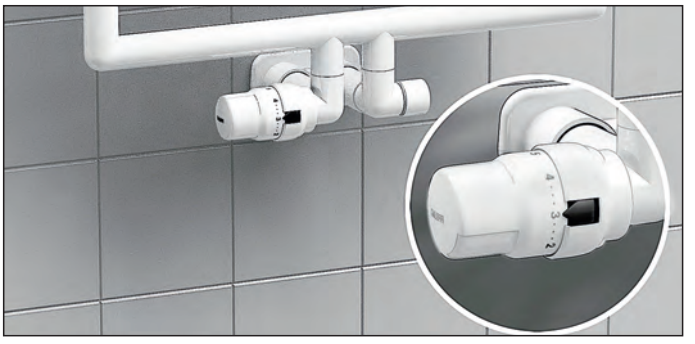

**Example of HIGH-STYLE valve installation for designer heating systems, right-hand version, with thermostatic control head**

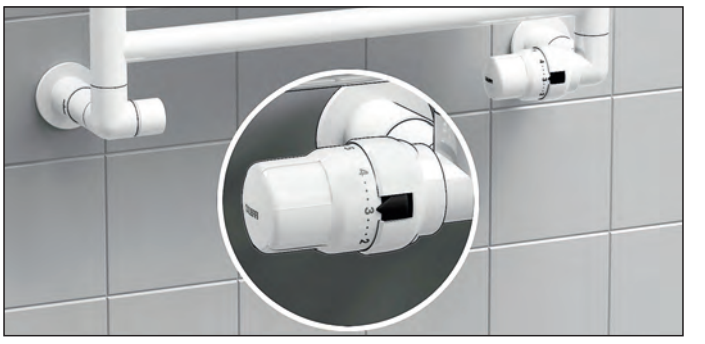

## 4003

High-Style convertible radiator valves and lockshield valves for designer radiators. With central connections. **Right-hand version**.
Complete with:
- double-angled convertible radiator valve fitted for thermostatic control head code 200015;
- lockshield valve, double angled connections;
- pipe-covering/wall-covering shell, connections: 50 mm centre distance.

To be used with fittings 437, 447, 681 and 679 series.

Maximum working pressure: 10 bar
Medium temperature range: 5–100 °C
Finish: white
Material: brass



| Code | Radiator connection | Pipe connection | Kv valve ($m^3/h$) | Kv lockshield valve ($m^3/h$) | | |
|---|---|---|---|---|---|---|
| **4003**11 | 1/2″ M | 23 p. 1,5 | 1,27 | 1,37 | 1 | 5 |

## 4004

High-Style convertible radiator valves and lockshield valves for designer radiators. With central connections. **Left-hand version**.
Complete with:
- double-angled convertible radiator valve fitted for thermostatic and thermo-electric control heads;
- lockshield valve, double angled connections;
- pipe-covering/wall-covering shell, connections: 50 mm centre distance.

To be used with fittings 437, 447, 681 and 679 series.

Maximum working pressure: 10 bar
Medium temperature range: 5–100 °C
Finish: white
Material: brass



| Code | Radiator connection | Pipe connection | Kv valve ($m^3/h$) | Kv lockshield valve ($m^3/h$) | | |
|---|---|---|---|---|---|---|
| **4004**11 | 1/2″ M | 23 p. 1,5 | 1,27 | 1,37 | 1 | 5 |

**Example of HIGH-STYLE valve installation for designer heating systems with central connection, left-hand version, with electronic control.**



## Control head for convertible radiator valves, white finish



### 205

Thermostatic control head for designer heating system valves, built-in sensor with liquid-filled element.
Graduated adjustment scale from ❄ to 5, corresponding to a temperature range of 7°C to 28°C.
With adapter, anti-tamper and key to lock the cap.

Finish: white

| Code | | |
|---|---|---|
| **205**005 | 1 | 5 |



### 205

Thermostatic control head for designer heating system valves, built-in sensor with liquid-filled element.
Graduated adjustment scale from ❄ to 5, corresponding to a temperature range of 7°C to 28°C.
With adapter.

Finish: white

| Code | | |
|---|---|---|
| **205**000 | 1 | 10 |



### 209

Tamper-proof anti-theft cap for use in public places.
**To be used with special allen key code 209001**.
For thermostatic control heads 200, 204, 202 and 205 series.

Finish: white

| Code | | |
|---|---|---|
| **209**000 | 1 | 10 |



### 209

Special allen key for tamper-proof anti-theft cap.
To be used with tamper-proof cap 209 series.

| Code | | |
|---|---|---|
| **209**001 | 1 | - |

## Convertible radiator valves, black finish

# 4001

High-Style convertible radiator valves and lockshield valves for designer radiators.
Complete with:
- angled-convertible radiator valve fitted for thermostatic and thermo-electric control heads;
- angled lockshield valve;
- two pipe-covering/ wall-covering shells and allen key.
Connectable with fittings 437, 447, 681 and 679 series.

Maximum working pressure: 10 bar
Medium temperature range: 5–100 °C
Finish: black
Material: brass



| Code | Radiator connection | Pipe connection | Kv valve ($m^3/h$) | Kv lockshield valve ($m^3/h$) | | |
|---|---|---|---|---|---|---|
| **4001**03 | 1/2" M | 23 p. 1,5 | 2,0 | 1,92 | 1 | 5 |

# 4003

High-Style convertible radiator valves and lockshield valves for designer radiators. Double-angled. **Right-hand version**.
Complete with:
- double-angled convertible radiator valve fitted for thermostatic and thermo-electric control heads;
- lockshield valve, double-angled connections;
- two pipe-covering/wall-covering shells and allen key.
Connectable with fittings 437, 447, 681 and 679 series.

Maximum working pressure: 10 bar
Medium temperature range: 5–100 °C
Finish: black
Material: brass



| Code | Radiator connection | Pipe connection | Kv valve ($m^3/h$) | Kv lockshield valve ($m^3/h$) | | |
|---|---|---|---|---|---|---|
| **4003**03 | 1/2" M | 23 p. 1,5 | 1,27 | 1,37 | 1 | 5 |

# 4004

High-Style convertible radiator valves and lockshield valves for designer radiators. Double-angled. **Left-hand version**.
Complete with:
- double-angled convertible radiator valve fitted for thermostatic and thermo-electric control heads;
- lockshield valve, double-angled connections;
- two pipe-covering/wall-covering shells and allen key.
To be used with fittings 437, 447, 681 and 679 series.

Maximum working pressure: 10 bar
Medium temperature range: 5–100 °C
Finish: black
Material: brass



| Code | Radiator connection | Pipe connection | Kv valve ($m^3/h$) | Kv lockshield valve ($m^3/h$) | | |
|---|---|---|---|---|---|---|
| **4004**03 | 1/2" M | 23 p. 1,5 | 1,27 | 1,37 | 1 | 5 |

**Example of HIGH-STYLE valve installation for designer heating systems with central connection, left-hand version, with thermostatic control head.**



**Example of HIGH-STYLE valve installation for designer heating systems, right-hand version, with thermostatic control head**



## 4003

High-Style convertible radiator valves and lockshield valves for designer radiators. With central connections. **Right-hand version**.
Complete with:
- double-angled convertible radiator valve fitted for thermostatic and thermo-electric control heads;
- lockshield valve, double-angled connections;
- pipe-covering/wall-covering shell, connections: 50 mm centre distance.

To be used with fittings 437, 447, 681 and 679 series.

Maximum working pressure: 10 bar
Medium temperature range: 5–100 °C
Finish: black
Material: brass



| Code | Radiator connection | Pipe connection | Kv valve ($m^3/h$) | Kv lockshield valve ($m^3/h$) | | |
|---|---|---|---|---|---|---|
| **4003**13 | 1/2″ M | 23 p. 1,5 | 1,27 | 1,37 | 1 | 5 |

## 4004

High-Style convertible radiator valves and lockshield valves for designer radiators. With central connections. **Left-hand version**.
Complete with:
- double-angled convertible radiator valve fitted for thermostatic and thermo-electric control heads;
- lockshield valve, double angled connections;
- pipe-covering/wall-covering shell, connections: 50 mm centre distance.

To be used with fittings 437, 447, 681 and 679 series.

Maximum working pressure: 10 bar
Medium temperature range: 5–100 °C
Finish: black
Material: brass



| Code | Radiator connection | Pipe connection | Kv valve ($m^3/h$) | Kv lockshield valve ($m^3/h$) | | |
|---|---|---|---|---|---|---|
| **4004**13 | 1/2″ M | 23 p. 1,5 | 1,27 | 1,37 | 1 | 5 |

**Example of HIGH-STYLE valve installation for designer heating systems with central connection, left-hand version, with electronic control.**



## Control head for convertible radiator valves, black finish



### 205

Thermostatic control head for designer heating system valves. Built-in sensor with liquid-filled element.
Graduated scale from ❄ to 5 corresponding to a temperature adjustment range from 7 °C to 28 °C.
With adapter, tamper-proof cap and special key for tamper-proof cap.

Finish: black

| Code | | |
|---|---|---|
| **205**025 | 1 | 5 |



### 205

Thermostatic control head for designer heating systems valves. Built-in sensor with liquid-filled element.
Graduated scale from ❄ to 5 corresponding to a temperature adjustment range from 7 °C to 28 °C.
With adapter.

Finish: black

| Code | | |
|---|---|---|
| **205**023 | 1 | 10 |



### 209

Tamper-proof anti-theft cap for use in public places.
For thermostatic control heads 200 series.
To be used with special allen key code 209001.

Finish: black

| Code | | |
|---|---|---|
| **209**020 | 1 | 10 |



### 209

Special allen key for tamper-proof anti-theft cap.
To be used with tamper-proof cap 209 series.

| Code | | |
|---|---|---|
| **209**001 | 1 | - |

# Convertible radiator valves, brushed metal finish

## 4001 NEW

High-Style convertible radiator valves.
Complete with:
- angled-convertible radiator valve fitted for thermostatic control head code 200015;
- angled lockshield valve;
- two pipe-covering/ wall-covering shells and allen key.
To be used with fittings 437, 447, 681 and 679 series.

Maximum working pressure: 10 bar
Medium temperature range: 5–100 °C
Finish: brushed metal
Material: brass



| Code | Radiator connection | Pipe connection | Kv valve ($m^3/h$) | Kv lockshield valve ($m^3/h$) | | |
|---|---|---|---|---|---|---|
| **400105** | 23 p. 1,5 | 1/2″ M | 2,0 | 1,92 | 1 | 5 |

## 4003 NEW

High-Style convertible radiator valves and lockshield valves for designer radiators. Double-angled. **Right-hand version**.
Complete with:
- double-angled convertible radiator valve fitted for thermostatic control head code 200015;
- lockshield valve, double-angled connections;
- two pipe-covering/wall-covering shells and allen key.
To be used with fittings 437, 447, 681 and 679 series.

Maximum working pressure: 10 bar
Medium temperature range: 5–100 °C
Finish: brushed metal
Material: brass



| Code | Radiator connection | Pipe connection | Kv valve ($m^3/h$) | Kv lockshield valve ($m^3/h$) | | |
|---|---|---|---|---|---|---|
| **400305** | 23 p. 1,5 | 1/2″ M | 1,27 | 1,37 | 1 | 5 |

## 4004 NEW

High-Style convertible radiator valves and lockshield valves for designer radiators. Double-angled. **Left-hand version**.
Complete with:
- double-angled convertible radiator valve fitted for thermostatic control head code 200015;
- lockshield valve, double-angled connections;
- two pipe-covering/wall-covering shells and allen key.
To be used with fittings 437, 447, 681 and 679 series.

Maximum working pressure: 10 bar
Medium temperature range: 5–100 °C
Finish: brushed metal
Material: brass



| Code | Radiator connection | Pipe connection | Kv valve ($m^3/h$) | Kv lockshield valve ($m^3/h$) | | |
|---|---|---|---|---|---|---|
| **400405** | 23 p. 1,5 | 1/2″ M | 1,27 | 1,37 | 1 | 5 |

**Example of HIGH-STYLE valve installation for designer heating systems with central connection, left-hand version, with thermostatic control head.**



## 4003 NEW

High-Style convertible radiator valves and lockshield valves for designer radiators. With central connections. **Right-hand version**.
Complete with:
- double-angled convertible radiator valve fitted for thermostatic and thermo-electric control heads;
- lockshield valve, double angled connections;
- pipe-covering/wall-covering shell, connections: 50 mm centre distance.

To be used with fittings 437, 447, 681 and 679 series.

Maximum working pressure: 10 bar
Medium temperature range: 5–100 °C
Finish: brushed metal
Material: brass



| Code | Radiator connection | Pipe connection | Kv valve ($m^3/h$) | Kv lockshield valve ($m^3/h$) | | |
|---|---|---|---|---|---|---|
| **4003**15 | 1/2" M | 23 p. 1,5 | 1,27 | 1,37 | 1 | 5 |

## 4004 NEW

High-Style convertible radiator valves and lockshield valves for designer radiators. With central connections. **Left-hand version**.
Complete with:
- double-angled convertible radiator valve fitted for thermostatic control head code 200015;
- lockshield valve, double angled connections;
- pipe-covering/wall-covering shell, connections: 50 mm centre distance.

To be used with fittings 437, 447, 681 and 679 series.

Maximum working pressure: 10 bar
Medium temperature range: 5–100 °C
Finish: brushed metal
Material: brass



| Code | Radiator connection | Pipe connection | Kv valve ($m^3/h$) | Kv lockshield valve ($m^3/h$) | | |
|---|---|---|---|---|---|---|
| **4004**15 | 1/2" M | 23 p. 1,5 | 1,27 | 1,37 | 1 | 5 |

**Example of HIGH-STYLE valve installation for designer heating systems, right-hand version, with thermostatic control head**

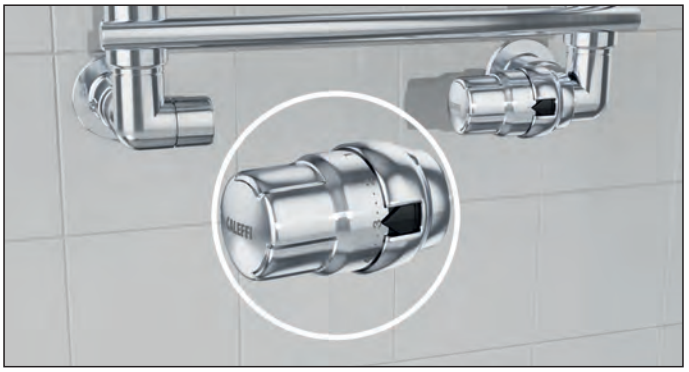

## Control head for convertible radiator valves, brushed metal finish



### 205 NEW

Thermostatic control head for designer heating system valves, built-in sensor with liquid-filled element.
Graduated adjustment scale from ❄ to 5, corresponding to a temperature range of 7°C to 28°C.
With adapter, anti-tamper and key to lock the cap.

Finish: brushed metal

| Code | | |
|---|---|---|
| **205**055 | 1 | 5 |



### 205 NEW

Thermostatic control head for designer heating system valves, built-in sensor with liquid-filled element.
Graduated adjustment scale from ❄ to 5, corresponding to a temperature range of 7°C to 28°C.
With adapter.

Finish: brushed metal

| Code | | |
|---|---|---|
| **205**053 | 1 | 10 |



### 209 NEW

Tamper-proof anti-theft cap for use in public places.
For thermostatic control heads 200, 204, 202 and 205 series.
To be used with special allen key code 209001.

Finish: brushed metal

| Code | | |
|---|---|---|
| **209**050 | 1 | 10 |



### 209

Special allen key for tamper-proof anti-theft cap.
To be used with tamper-proof cap 209 series.

| Code | | |
|---|---|---|
| **209**001 | 1 | - |

## Convertible radiator valves, chrome finish

# 4001

High-Style convertible radiator valves and lockshield valves for designer radiators.
Complete with:
- angled-convertible radiator valve fitted for thermostatic control head code 200015;
- angled lockshield valve;
- two pipe-covering/ wall-covering shells and allen key.
Connectable with fittings 437, 447, 681 and 679 series.

Maximum working pressure: 10 bar
Medium temperature range: 5–100 °C
Finish: chrome plated
Material: brass



| Code | Radiator connection | Pipe connection | Kv valve ($m^3/h$) | Kv lockshield valve ($m^3/h$) | | |
|---|---|---|---|---|---|---|
| **4001**00 | 1/2″ M | 23 p. 1,5 | 2,0 | 1,92 | 1 | 5 |

# 4003

High-Style convertible radiator valves and lockshield valves for designer radiators. Double-angled. **Right-hand version**.
Complete with:
- double-angled convertible radiator valve fitted for thermostatic and thermo-electric control heads;
- lockshield valve, double-angled connections;
- two pipe-covering/wall-covering shells and allen key.
Connectable with fittings 437, 447, 681 and 679 series.

Maximum working pressure: 10 bar
Medium temperature range: 5–100 °C
Finish: chrome plated
Material: brass



| Code | Radiator connection | Pipe connection | Kv valve ($m^3/h$) | Kv lockshield valve ($m^3/h$) | | |
|---|---|---|---|---|---|---|
| **4003**00 | 1/2″ M | 23 p. 1,5 | 1,27 | 1,37 | 1 | 5 |

# 4004

High-Style convertible radiator valves and lockshield valves for designer radiators. Double-angled. **Left-hand version**.
Complete with:
- double-angled convertible radiator valve fitted for thermostatic and thermo-electric control heads;
- lockshield valve, double-angled connections;
- two pipe-covering/wall-covering shells and allen key.
Connectable with fittings 437, 447, 681 and 679 series.

Maximum working pressure: 10 bar
Medium temperature range: 5–100 °C
Finish: chrome plated
Material: brass



| Code | Radiator connection | Pipe connection | Kv valve ($m^3/h$) | Kv lockshield valve ($m^3/h$) | | |
|---|---|---|---|---|---|---|
| **4004**00 | 1/2″ M | 23 p. 1,5 | 1,27 | 1,37 | 1 | 5 |

**Example of HIGH-STYLE valve installation for designer heating systems, right-hand version, with thermostatic control head**

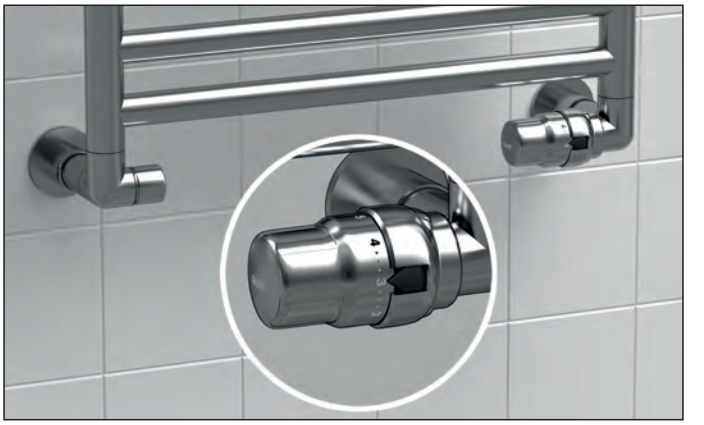

## 4003

High-Style convertible radiator valves and lockshield valves for designer radiators. With central connections. **Right-hand version**.
Complete with:
- double-angled convertible radiator valve fitted for thermostatic and thermo-electric control heads;
- lockshield valve, double angled connections;
- pipe-covering/wall-covering shell, connections: 50 mm centre distance.

Connectable with fittings 437, 447, 681 and 679 series.

Maximum working pressure: 10 bar
Medium temperature range: 5–100 °C
Finish: chrome plated
Material: brass



| Code | Radiator connection | Pipe connection | Kv valve ($m^3/h$) | Kv lockshield valve ($m^3/h$) | | |
|---|---|---|---|---|---|---|
| **4003**10 | 1/2" M | 23 p. 1,5 | 1,27 | 1,37 | 1 | 5 |

## 4004

High-Style convertible radiator valves and lockshield valves for designer radiators. With central connections. **Left-hand version**.
Complete with:
- double-angled convertible radiator valve fitted for thermostatic and thermo-electric control heads;
- lockshield valve, double angled connections;
- pipe-covering/wall-covering shell, connections: 50 mm centre distance.

Connectable with fittings 437, 447, 681 and 679 series.

Maximum working pressure: 10 bar
Medium temperature range: 5–100 °C
Finish: chrome plated
Material: brass



| Code | Radiator connection | Pipe connection | Kv valve ($m^3/h$) | Kv lockshield valve ($m^3/h$) | | |
|---|---|---|---|---|---|---|
| **4004**10 | 1/2" M | 23 p. 1,5 | 1,27 | 1,37 | 1 | 5 |

**Example of HIGH-STYLE valve installation for designer heating systems with central connection, left-hand version, with thermostatic control head**



## Control head for convertible radiator valves, chrome finish



### 200

Thermostatic control head for designer heating systems valves, built-in sensor with liquid-filled element.
Graduated scale from ❄ to 5 corresponding to a temperature adjustment range from 7 °C to 28 °C.
With adapter, tamper-proof cap and special key for tamper-proof cap.

Finish: chrome plated

| Code | | |
|---|---|---|
| **200**015 | 1 | 5 |



### 200

Thermostatic control head for designer heating systems valves, built-in sensor with liquid-filled element.
Graduated scale from ❄ to 5 corresponding to a temperature adjustment range from 7 °C to 28 °C.
With adapter.

Finish: chrome plated

| Code | | |
|---|---|---|
| **200**013 | 1 | 10 |



### 209

Tamper-proof anti-theft cap for use in public places.
For thermostatic control heads 200 series.
To be used with special allen key code 209001.

Finish: chrome plated

| Code | | |
|---|---|---|
| **209**004 | 1 | 10 |



### 209

Special allen key for tamper-proof anti-theft cap.
To be used with tamper-proof cap 209 series.

| Code | | |
|---|---|---|
| **209**001 | 1 | - |

## Convertible radiator valve and lockshield valve for heating systems



### 3380

Convertible radiator valve.
Complete with:
- convertible radiator valve fitted for thermo-electric actuators and thermostatic control heads;
- lockshield valve.

For copper, plastic and multi-layer plastic pipe.
Angled connections.

Maximum working pressure: 10 bar
Medium temperature range: 5–100 °C
Finish: chrome plated
Material: brass

| Code | Radiator connection | Pipe connection | Kv valve ($m^3/h$) | | |
|---|---|---|---|---|---|
| **3380**40 | 1/2″ M | 23 p. 1,5 | 2,70 | 1 | 5 |



### 437

Compression fitting.
For annealed copper, hard copper, brass, mild and stainless steel pipes.
High chrome finish.
With O-Ring seal.

Maximum working pressure: 10 bar
Medium temperature range: -25–120 °C
Finish: chrome plated
Material: brass

| Code | Connection 1 | Connection 2 | | |
|---|---|---|---|---|
| **437**112 | 23 p. 1,5 | Ø 12 | 1 | 50 |
| **437**114 | 23 p. 1,5 | Ø 14 | 1 | 50 |
| **437**115 | 23 p. 1,5 | Ø 15 | 1 | 50 |
| **437**116 | 23 p. 1,5 | Ø 16 | 1 | 50 |



### 681 DARCAL

Self-adjustable diameter fitting for single and multilayer plastic pipes.
Working temperature range 5–80°C (PE-X); 5–75°C (Multi-layer marked 95°C).

Maximum working pressure: 10 bar
Medium temperature range: 5–75 °C
Finish: chrome plated
Material: brass

| Code | Connection 1 | Connection 2 | | |
|---|---|---|---|---|
| **681**101 | 23 p. 1,5 | Øint. 9,5–10, Øext. 12–14 | 1 | 50 |
| **681**124 | 23 p. 1,5 | Øint. 11,5–12, Øext. 14–16 | 1 | 50 |



### 383

Fitting for conversion from copper to steel connection.

| Code | Connection 1 | Connection 2 | | |
|---|---|---|---|---|
| **383**231 | 23 p.1,5 F | 3/8″F | 1 | 10 |
| **383**241 | 23 p.1,5 F | 1/2″F | 1 | 10 |

## Convertible radiator and lockshield valves with push fit connection



### 338

Convertible radiator valve fitted for thermostatic control heads and thermo-electric actuator.
Push fit connection for Ø 15 hard and annealed copper pipes or for extension code 936415.
Angled version.
With clip connection.

Maximum working pressure: 10 bar
Medium temperature range: 5–100 °C
Finish: chrome plated
Material: brass

| Code | Radiator connection | Pipe connection | Kv ($m^3/h$) | | |
|---|---|---|---|---|---|
| **338**415 | 1/2″ M, Ø 15 | 1/2″ M, Ø 15 | 2,7 | 10 | 50 |



### 342

Lockshield valve.
Push fit connection for Ø 15 hard and annealed copper pipes or for extension code 936415.
Angled version.
With clip connection.

Maximum working pressure: 10 bar
Medium temperature range: 5–100 °C
Finish: chrome plated
Material: brass

| Code | Radiator connection | Pipe connection | Kvs ($m^3/h$) | | |
|---|---|---|---|---|---|
| **342**415 | 1/2″ M, Ø 15 | 1/2″ M, Ø 15 | 3,99 | 10 | 50 |

**Installation of the valve on the pipe and locking with suitable clamps**

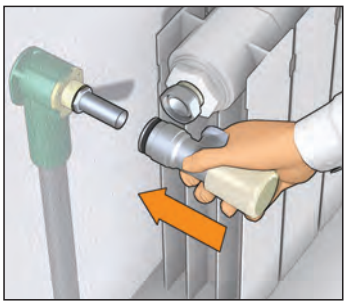

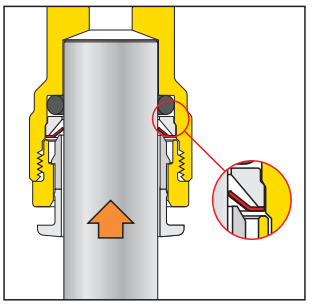

**Release by pressing on the outer ring**

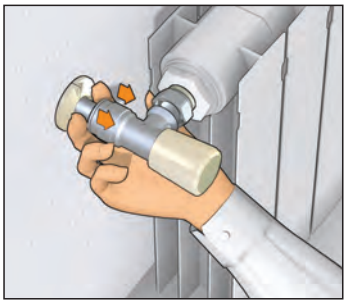

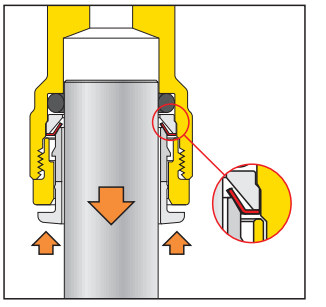

# WALL-COVERING PLATES

## Single wall-covering plates



### 4499

Single wall-covering plate.
For pipes with external diameters from 12 to 20 mm.

Finish: white

| Code | | |
|---|---|---|
| **4499**00 | 1 | 40 |



### 4499

Single wall-covering plate.
For pipes with external diameters from 12 to 20 mm.

Finish: chrome plated

| Code | | |
|---|---|---|
| **4499**10 | 1 | 40 |

## Double wall-covering plates



### 4499

Double wall-covering plate.
For pipes with external diameters from 12 to 20 mm.

Finish: white

| Code | Outlet centre distance (mm) | | |
|---|---|---|---|
| **4499**01 | 35 | 1 | 50 |
| **4499**02 | 40 | 1 | 50 |



### 4499

Double wall-covering plate.
For pipes with external diameters from 12 to 20 mm.

Finish: chrome plated

| Code | Outlet centre distance (mm) | | |
|---|---|---|---|
| **4499**11 | 35 | 1 | 50 |
| **4499**12 | 40 | 1 | 50 |

# RADIATOR VALVES FOR ONE-PIPE AND TWO-PIPE SYSTEMS

## Convertible radiator valves for one-pipe and two-pipe designer heating systems



### 4005

Convertible radiator valve fitted for thermostatic and electronic control heads, thermo-electric actuators. **Right-hand version**.
Factory set for one-pipe systems, adjustable for two-pipe systems.
For copper, single and multilayer plastic pipes.
Flow rate to the radiator:
- with manual control knob: 45 %;
- with thermostatic control head (2K proportional band): 30 %.

Maximum working pressure: 10 bar
Medium temperature range: 5–100 °C
Outlet centre distance: 40 mm
Material: brass
Finish: chrome plated
Length probe: 40 cm

| Code | Radiator connection | Pipe connection | Kv one-pipe ($m^3/h$) | Kv two-pipe ($m^3/h$) | | |
|---|---|---|---|---|---|---|
| **4005**10 | 1/2" M | 23 p. 1,5 | 1,6 | 0,96 | 1 | 5 |



### 4005

Convertible radiator valve fitted for thermostatic and electronic control heads, thermo-electric actuators. **Left-hand version**.
Factory set for one-pipe systems, adjustable for two-pipe systems.
For copper, single and multilayer plastic pipes.
Flow rate to the radiator:
- with manual control knob: 45 %;
- with thermostatic control head (2K proportional band): 30 %.

Maximum working pressure: 10 bar
Medium temperature range: 5–100 °C
Outlet centre distance: 40 mm
Material: brass
Finish: chrome plated
Length probe: 40 cm

| Code | Radiator connection | Pipe connection | Kv one-pipe ($m^3/h$) | Kv two-pipe ($m^3/h$) | | |
|---|---|---|---|---|---|---|
| **4005**20 | 1/2" M | 23 p. 1,5 | 1,6 | 0,96 | 1 | 5 |

***One-pipe application***

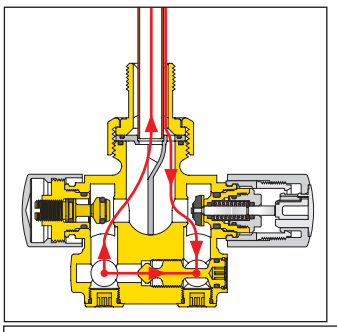

***Two-pipe application***

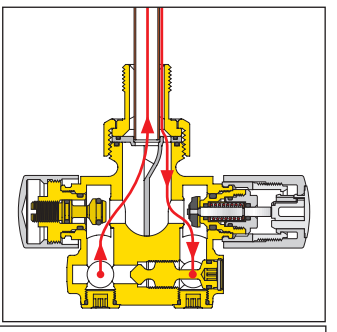

**Flow and return connections can be inverted by means of the rotation of the specific deflector.**

## Convertible radiator valves for one-pipe and two-pipe systems



### 455

Convertible radiator valve fitted for thermostatic control heads, electronic and thermo-electric actuators.
For copper, simple plastic and multilayer plastic pipes.
Factory set for one-pipe systems, adjustable for two-pipe systems.

Maximum working pressure: 10 bar
Medium temperature range: 5–100 °C
Outlet centre distance: 40 mm
Material: brass
Finish: chrome plated
Length probe: 30 cm

| Code | Radiator connection | Pipe connection | Kv one-pipe ($m^3/h$) | Kv two-pipe ($m^3/h$) | | |
|---|---|---|---|---|---|---|
| **455**400 | 1/2" M | 23 p. 1,5 | 2,0 | 1,10 | 10 | - |
| **455**500 | 3/4" M | 23 p. 1,5 | 2,0 | 1,10 | 10 | - |
| **455**600 | 1" M right | 23 p. 1,5 | 2,0 | 1,10 | 10 | - |
| **455**601 | 1" M left | 23 p. 1,5 | 2,0 | 1,10 | 10 | - |

## Convertible radiator valves for one-pipe systems



### 456

Convertible radiator valve fitted for thermostatic control heads, electronic and thermo-electric actuators.
For copper, simple plastic and multilayer plastic pipes.
Flow rate to the radiator:
- with manual control knob: 27 %;
- with thermostatic control head (proportional band 2K): 20 %.
For one-pipe systems.
PP probe.

Maximum working pressure: 10 bar
Medium temperature range: 5–100 °C
Outlet centre distance: 35 mm
Length probe: 33 cm
Material: brass
Finish: chrome plated

| Code | Radiator connection | Pipe connection | | |
|---|---|---|---|---|
| **456**400 | 1/2" M | 23 p. 1,5 | 10 | - |
| **456**500 | 3/4" M | 23 p. 1,5 | 10 | - |

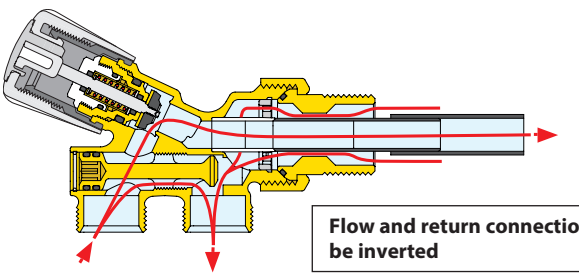

**Flow and return connections can be inverted**

## Manual valve for one-pipe systems



### 348

Radiator valve for one-pipe systems. With front adjusting handle.
Flow rate to the radiator: 100 %.
Without template and wall-covering plate.
For copper, single and multilayer plastic pipes.

Maximum working pressure: 10 bar
Medium temperature range: 5–100 °C
Outlet centre distance: 40 mm
Length probe: 30 cm
Material: brass
Finish: chrome plated

| Code | Radiator connection | Pipe connection | Kv ($m^3/h$) | | |
|---|---|---|---|---|---|
| **348**400 | 1/2" M | 23 p. 1,5 | 3,10 | 10 | - |
| **348**500 | 3/4" M | 23 p. 1,5 | 3,50 | 10 | - |



### 4501

Radiator valve for one-pipe systems.
For copper, single and multilayer plastic pipes.
Without template and wall-covering plate.
Flow rate to the radiator: 100 %.

Maximum working pressure: 10 bar
Medium temperature range: 5–100 °C
Outlet centre distance: 40 mm
Length probe: 30 cm
Material: brass
Finish: chrome plated

| Code | Radiator connection | Pipe connection | Kv ($m^3/h$) | | |
|---|---|---|---|---|---|
| **4501**40 | 1/2" M | 23 p. 1,5 | 3,20 | 10 | - |
| **4501**50 | 3/4" M | 23 p. 1,5 | 3,70 | 10 | - |



### 452

Radiator valve for one-pipe systems.
Complete with:
- template;
- wall-covering plate;
- probe connection.

For outside probe Ø 15 mm (454 Series). For copper, single and multilayer plastic pipes.
Wall connections.
Flow rate to the radiator: 50 %.

Maximum working pressure: 10 bar
Medium temperature range: 5–100 °C
Outlet centre distance: 40 mm
Finish: chrome plated
Material: brass

| Code | Radiator connection | Pipe connection | Kv ($m^3/h$) | | |
|---|---|---|---|---|---|
| **452**400 | 1/2" M | 23 p. 1,5 | 2,2 | 1 | 25 |



### 328

Radiator valve for one-pipe systems.
Complete with probe connection.
For outside probe Ø 15 mm (series 454). For copper, single and multilayer plastic pipes.
Floor connections.
Flow rates to the radiator: 50%.
Wall connections.

Maximum working pressure: 10 bar
Medium temperature range: 5–100 °C
Outlet centre distance: 40 mm
Finish: chrome plated
Material: brass

| Code | Radiator connection | Pipe connection | Kv ($m^3/h$) | | |
|---|---|---|---|---|---|
| **328**400 | 23 p. 1,5 | 23 p. 1,5 | 2,2 | 1 | 20 |

## Manual valve for two-pipe systems



### 452

Radiator valve for two-pipe systems.
Complete with:
- template;
- wall-covering plate
- probe connection.

For outside probe Ø 15 mm (Series 454). For copper, single and multi-layer plastic pipes.
Wall connections.

Maximum working pressure: 10 bar
Medium temperature range: 5–100 °C
Outlet centre distance: 40 mm
Finish: chrome plated
Material: brass

| Code | Radiator connection | Pipe connection | Kv ($m^3/h$) | | |
|---|---|---|---|---|---|
| **452**401 | 1/2" M | 23 p. 1,5 | 1,8 | 1 | 25 |



### 328

Radiator valve for two-pipe systems.
Complete with probe connection.
For outside probe Ø 15 mm (series 454). For copper, single and multilayer plastic pipes.
Floor connections.

Maximum working pressure: 10 bar
Medium temperature range: 5–100 °C
Outlet centre distance: 40 mm
Finish: chrome plated
Material: brass

| Code | Radiator connection | Pipe connection | Kv ($m^3/h$) | | |
|---|---|---|---|---|---|
| **328**401 | 1/2" M | 23 p. 1,5 | 1,8 | 1 | 20 |

# Spare parts for one-pipe and two-pipe radiator valves



Spare unit pipe + tailpiece.

| Code | Article use | | |
|---|---|---|---|
| F0002197 | 455400 | 1 | - |
| F0002198 | 455500 | 1 | - |
| F0002199 | 455600 | 1 | - |
| F0002200 | 455601 | 1 | - |



Nut for 455 series one-pipe convertible radiator valve union.

Finish: chrome plated

| Code | | |
|---|---|---|
| R41277/C | 1 | - |



Jet breaker for 349 series one-pipe valve.

| Code | Article use | | |
|---|---|---|---|
| R46030 | 348400, 348500 | 1 | - |



Jet breaker for 455 series one-pipe convertible radiator valve.

| Code | Notes | Article use | | |
|---|---|---|---|---|
| R46042 | for 455 series (previous version) | 455400, 455500, 455600, 455601 | 1 | - |
| R46072 | - | 455400, 455500, 455600, 455601 | 1 | - |



Spare headworks.

| Code | | |
|---|---|---|
| F49157 | 1 | 10 |



## 4496

Wall template.
For valves 4501, 452, 328, 348 and 455 series.

Outlet centre distance: 40 mm

| Code | | |
|---|---|---|
| **4496**40 | 10 | - |



## 453

Brass pipe extension for probe.
For valves 348, 4501 and 455 series.

| Code | Article use | Length (mm) | | |
|---|---|---|---|---|
| **453**020 | 455400, 455500, 348400, 348500, 450140, 450150 | 200 | 10 | - |
| **453**030 | 455600, 455601 | 300 | 10 | - |

# FITTINGS

## Fittings - 23 p. 1.5 threaded connections



### 679 DARCAL

Fitting for multilayer plastic pipes for continuous high temperature use.

Maximum working pressure: 10 bar
Finish: chrome plated
Medium temperature range: 0–95 °C

| Code | Connection | Pipe diameter | Notes | | |
|---|---|---|---|---|---|
| **679**014 | 23 p. 1,5 | Ø 14x2 | - | 10 | 100 |
| **679**024 | 23 p. 1,5 | Ø 16x2 | - | 10 | 100 |
| **679**025 | 23 p. 1,5 | Ø 16x2,25 | - | 10 | 100 |
| **679**044 | 23 p. 1,5 | Ø 18x2 | - | 10 | 100 |
| **679**064 | 23 p. 1,5 | Ø 20x2 | with metal ring | 10 | 100 |
| **679**065 | 23 p. 1,5 | Ø 20x2,25 | with metal ring | 10 | 100 |
| **679**066 | 23 p. 1,5 | Ø 20x2,5 | with metal ring | 10 | 100 |
| **679**067 | 23 p. 1,5 | Ø 20x2,9 | with metal ring for REHAU pipe (see note *) | 10 | 100 |

For a correct use, adjust the multilayer pipe diameter before installation using the Caleffi calibrator 679 series.

**Note(*): For the use with REHAU pipes, use REHAU's calibrator.**



### 681 DARCAL

Self-adjustable diameter fitting for single and multilayer plastic pipes.
Working temperature range 5–80°C (PE-X); 5–75°C (Multi-layer marked 95°C).

Maximum working pressure: 10 bar
Medium temperature range: 5–75 °C
Finish: chrome plated

| Code | Connection | Pipe diameter | | |
|---|---|---|---|---|
| **681**000 | 23 p. 1,5 | Øint. 7,5–8, Øext. 12–14 | 10 | 100 |
| **681**002 | 23 p. 1,5 | Øint. 9–9,5, Øext. 14–16 | 10 | 100 |
| **681**001 | 23 p. 1,5 | Øint. 9,5–10, Øext. 12–14 | 10 | 100 |
| **681**006 | 23 p. 1,5 | Øint. 9,5–10, Øext. 14–16 | 10 | 100 |
| **681**015 | 23 p. 1,5 | Øint. 10,5–11, Øext. 14–16 | 10 | 100 |
| **681**017 | 23 p. 1,5 | Øint. 10,5–11, Øext. 16–18 | 10 | 100 |
| **681**024 | 23 p. 1,5 | Øint. 11,5–12, Øext. 14–16 | 10 | 100 |
| **681**026 | 23 p. 1,5 | Øint. 11,5–12, Øext. 16–18 | 10 | 100 |
| **681**035 | 23 p. 1,5 | Øint. 12,5–13, Øext. 16–18 | 10 | 100 |
| **681**044 | 23 p. 1,5 | Øint. 13,5–14, Øext. 16–18 | 10 | 100 |

**Example: 681 series fitting selection**

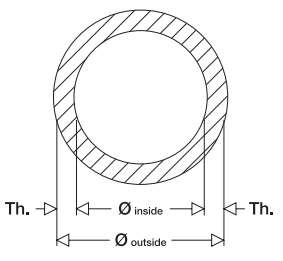


Known both the outside and inside diameters (**ex.: 17 mm** and **13 mm**);

or known the outside diameter (**ex.: Øo 17 mm**) and the thickness (**ex.: th. 2 mm**) and considering that:

**Øoutside – 2 · th. = Øinside**

**17 – 2 · 2 = 13 mm**

Look within the table for the code matching both diameters:

| Code | | $Ø_{inside}$ | $Ø_{outside}$ |
|---|---|---|---|
| **681**035 | 23 p.1,5 | 12,5–13 | 16–18 |



### 437

Compression fitting.
For soft annealed copper, hard copper, brass, mild and stainless steel pipes.
With O-Ring seal.

Maximum working pressure: 10 bar
Medium temperature range: -25–120 °C
Finish: chrome plated

| Code | Connection | Pipe diameter | | |
|---|---|---|---|---|
| **437**010 | 23 p. 1,5 | Ø 10 | 1 | 100 |
| **437**012 | 23 p. 1,5 | Ø 12 | 1 | 100 |
| **437**014 | 23 p. 1,5 | Ø 14 | 1 | 100 |
| **437**015 | 23 p. 1,5 | Ø 15 | 1 | 100 |
| **437**016 | 23 p. 1,5 | Ø 16 | 1 | 100 |



### 447

Pre-assembled compression fitting.
For annealed copper, hard copper, brass, mild and stainless steel pipes.
With O-Ring seal.

Maximum working pressure: 10 bar
Medium temperature range: -25–120 °C
Finish: chrome plated

| Code | Connection | Pipe diameter | | |
|---|---|---|---|---|
| **447**010 | 23 p. 1,5 | Ø 10 | 2 | 100 |
| **447**012 | 23 p. 1,5 | Ø 12 | 2 | 100 |
| **447**014 | 23 p. 1,5 | Ø 14 | 2 | 100 |
| **447**015 | 23 p. 1,5 | Ø 15 | 2 | 100 |
| **447**016 | 23 p. 1,5 | Ø 16 | 2 | 100 |



### 438

Compression fitting for copper pipe.
With PTFE seal.

Finish: chrome plated
Medium temperature range: 5–80 °C

| Code | Connection | Pipe diameter | | |
|---|---|---|---|---|
| **438**010 | 23 p. 1,5 | Ø 10 | 2 | 100 |
| **438**012 | 23 p. 1,5 | Ø 12 | 2 | 100 |
| **438**014 | 23 p. 1,5 | Ø 14 | 2 | 100 |
| **438**015 | 23 p. 1,5 | Ø 15 | 2 | 100 |
| **438**016 | 23 p. 1,5 | Ø 16 | 2 | 100 |
| **438**018 | 23 p. 1,5 | Ø 18 with pipe stiffener | 2 | 100 |



### 439

Fitting for copper pipe, with gasket.
**Do not use with valves 232 series.**

Finish: chrome plated

| Code | Connection | Pipe diameter | | |
|---|---|---|---|---|
| **439**010 | 23 p. 1,5 | Ø 10 | 1 | 100 |
| **439**012 | 23 p. 1,5 | Ø 12 | 1 | 100 |
| **439**014 | 23 p. 1,5 | Ø 14 | 1 | 100 |
| **439**015 | 23 p. 1,5 | Ø 15 | 1 | 100 |
| **439**016 | 23 p. 1,5 | Ø 16 | 1 | 100 |

## Fittings - 3/4" threaded connections



### 679
### DARCAL

Fitting for multilayer plastic pipes for continuous high temperature use.

Maximum working pressure: 10 bar
Medium temperature range: 0–95 °C
Finish: chrome plated

| Code | Connection | Pipe diameter | | |
|---|---|---|---|---|
| **679**264 | 3/4" F | Ø 20x2 | 10 | 100 |
| **679**265 | 3/4" F | Ø 20x2,25 | 10 | 100 |
| **679**266 | 3/4" F | Ø 20x2,5 | 10 | 100 |

For a correct use, adjust the multilayer pipe diameter before installation using the Caleffi calibrator 679 series.

Calibrator 679 series page 106



### 681
### DARCAL

Self-adjustable diameter fitting for single and multilayer plastic pipes.
Working temperature range 5–80°C (PE-X); 5–75°C (Multi-layer marked 95°C).

Maximum working pressure: 10 bar
Medium temperature range: 5–75 °C
Finish: chrome plated

| Code | Connection | Pipe diameter | | |
|---|---|---|---|---|
| **681**502 | 3/4" F | Øint. 7,5–8, Øext. 12–14 | 10 | 100 |
| **681**500 | 3/4" F | Øint. 9–9,5, Øext. 14–16 | 10 | 100 |
| **681**501 | 3/4" F | Øint. 9,5–10, Øext. 12–14 | 10 | 100 |
| **681**506 | 3/4" F | Øint. 9,5–10, Øext. 14–16 | 10 | 100 |
| **681**515 | 3/4" F | Øint. 10,5–11, Øext. 14–16 | 10 | 100 |
| **681**517 | 3/4" F | Øint. 10,5–11, Øext. 16–18 | 10 | 100 |
| **681**524 | 3/4" F | Øint. 11,5–12, Øext. 14–16 | 10 | 100 |
| **681**526 | 3/4" F | Øint. 11,5–12, Øext. 16–18 | 10 | 100 |
| **681**535 | 3/4" F | Øint. 12,5–13, Øext. 16–18 | 10 | 100 |
| **681**537 | 3/4" F | Øint. 12,5–13, Øext. 18–20 | 10 | 100 |
| **681**546 | 3/4" F | Øint. 13,5–14, Øext. 18–20 | 10 | 100 |
| **681**555 | 3/4" F | Øint. 14,5–15, Øext. 18–20 | 10 | 100 |
| **681**556 | 3/4" F | Øint. 15–15,5, Øext. 18–20 | 10 | 100 |
| **681**564 | 3/4" F | Øint. 15,5–16, Øext. 18–20 | 10 | 100 |



### 437

Compression fitting.
For annealed copper, hard copper, brass, mild and stainless steel pipes.
With O-Ring seal.

Maximum working pressure: 10 bar
Medium temperature range: -25–120 °C
Finish: chrome plated

| Code | Connection | Pipe diameter | | |
|---|---|---|---|---|
| **437**510 | 3/4" F | Ø 10 | 2 | 100 |
| **437**512 | 3/4" F | Ø 12 | 2 | 100 |
| **437**514 | 3/4" F | Ø 14 | 2 | 100 |
| **437**515 | 3/4" F | Ø 15 | 2 | 100 |
| **437**516 | 3/4" F | Ø 16 | 2 | 100 |
| **437**518 | 3/4" F | Ø 18 | 2 | 10 |

For connection to the pipes of special valves for panel radiators.



### 438

Compression fitting for copper pipe, with PTFE seal.

Medium temperature range: 5–80 °C
Finish: chrome plated

| Code | Connection | Pipe diameter | | |
|---|---|---|---|---|
| **438**512 | 3/4" F | Ø 12 | 2 | 100 |
| **438**514 | 3/4" F | Ø 14 | 2 | 100 |
| **438**515 | 3/4" F | Ø 15 | 2 | 100 |
| **438**516 | 3/4" F | Ø 16 | 2 | 100 |
| **438**518 | 3/4" F | Ø 18 | 2 | 100 |

## Accessories for fittings



### 679

Calibrator and handle to adjust multilayer pipes diameter before use with fittings 679 series.

| Code | Notes | | |
|---|---|---|---|
| **679**001 | calibrator Ø14x2 | 1 | - |
| **679**002 | calibrator Ø16x2 | 1 | - |
| **679**003 | calibrator Ø16x2,25 | 1 | - |
| **679**004 | calibrator Ø18x2 | 1 | - |
| **679**006 | calibrator Ø20x2 | 1 | - |
| **679**007 | calibrator Ø20x2,25 | 1 | - |
| **679**008 | calibrator Ø20x2,5 | 1 | - |
| **679**010 | calibrator Ø26x3 | 1 | - |
| **679**009 | handle for calibrator | 1 | - |

**Multilayer pipe calibration and installation of fitting components 679 series**

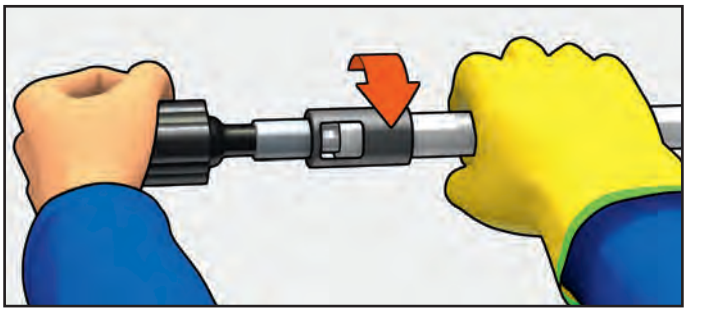

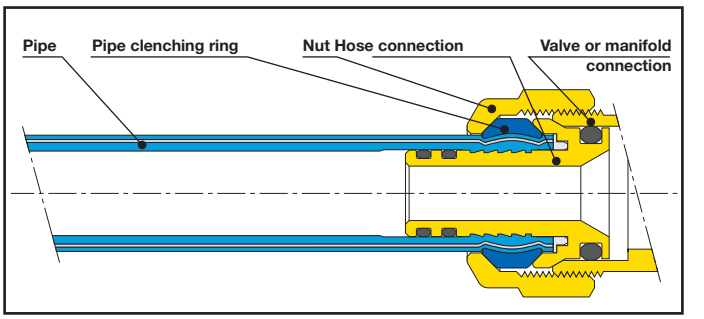

# ACCESSORIES FOR RADIATORS

## Accessories for radiators



Adapter for installing thermostatic and thermo-electric actuator with valves 338, 339, 401, 402, 425, 426, 421, 422, 455 and 456 series.

| Code | | |
|---|---|---|
| F36077 | 1 | 50 |



### 230

Kit for △p measuring in the circuits with dynamic valves.
INTERNATIONAL APPLICATION PENDING

| Code | | |
|---|---|---|
| **230**100 | 1 | - |



### 381

Telescopic union tailpiece with nut for radiator valves and lockshield valves.

Maximum working pressure: 10 bar
Medium temperature range: 5–100 °C
Telescopic union extension: 15 mm
Finish: chrome plated

| Code | Connection 1 | Connection 2 | | |
|---|---|---|---|---|
| **381**302 | 1/2" F captive nut | 3/8" M | 1 | 10 |
| **381**402 | 3/4" F captive nut | 1/2" M | 1 | 10 |



### 382

Fitting with 23 p.1,5 captive nut.

Maximum working pressure: 10 bar
Medium temperature range: 5–100 °C
Finish: chrome plated

| Code | Connection 1 | Connection 2 | | |
|---|---|---|---|---|
| **382**000 | 23 p.1,5 M | 23 p.1,5 F captive nut | 10 | - |



### 382

Reduced tailpiece.

Finish: chrome plated

| Code | Connection 1 | Connection 2 | | |
|---|---|---|---|---|
| **382**532 | 3/4" F captive nut | 3/8" M | 1 | 10 |



### 383

Female fitting - olive coupling.

Finish: chrome plated

| Code | Connection 1 | Connection 2 | | |
|---|---|---|---|---|
| **383**151 | 23 p.1,5 F | 3/4" M | 10 | - |



### 383

Connection fitting with O-Ring seal.
For 679 and 681 series (3/4" versions).

Finish: chrome plated

| Code | Connection 1 | Connection 2 | | |
|---|---|---|---|---|
| **383**551 | 23 p.1,5 F olive | 3/4" M | 10 | 100 |



### 384

Male fitting - olive coupling.

Finish: chrome plated

| Code | Connection 1 | Connection 2 | | |
|---|---|---|---|---|
| **384**031 | 3/8" M | 23 p.1,5 M | 10 | - |
| **384**041 | 1/2" M | 23 p.1,5 M | 10 | - |



### 3871

Wrench for 26 and 30 mm hexagonal nuts.
For fittings 437, 447, 679, 680, 681 23 P.1,5 and 3/4" series.

| Code | Notes | | |
|---|---|---|---|
| **3871**00 | 26 mm x 30 mm | 1 | 4 |

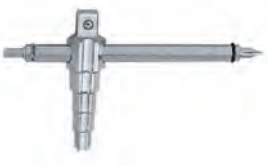

### 3871

Universal key.
Can be used for unions from 3/8" to 1"

| Code | | |
|---|---|---|
| **3871**27 | 1 | 10 |



### 4490

Knob for thermostatic radiator valves.
For valves 220, 221, 222, 223, 224, 225, 226, 227, 230, 231, 232, 233, 234 and 237 series.

| Code | | |
|---|---|---|
| **4490**10 | 20 | 100 |



## 942

Sleeve.

Finish: chrome plated

| Code | Connection 1 | Connection 2 | | |
|---|---|---|---|---|
| **942**551 | 3/4″ M | 3/4″ M | 1 | 50 |
| **942**561 | 3/4″ M | 1″ M | 1 | 50 |



## 936

Extension for connection between elbow fitting 933 series and radiator valves.
Annealed copper.
With shaped rubber seal.

Finish: chrome plated
Length: 200 mm

| Code | Connection 1 | Connection 2 | | |
|---|---|---|---|---|
| **936**400 | 1/2″ M | Ø 16 | 1 | 50 |



## 459

Angled connection for one-pipe valves 328 and 452 series and convertible radiator valves code 339402.

Finish: chrome plated
Material: brass

| Code | Connection 1 | Connection 2 | | |
|---|---|---|---|---|
| **459**001 | 1/2″ M | 3/4″ F captive nut | 1 | 10 |



## 454

Outside probe.
To be connected with valves 452 and 328 series at the bottom and radiator valves 223, 227, 339 and 341 series.

Material: brass

| Code | Length (mm) | Ø (mm) | | |
|---|---|---|---|---|
| **454**060 | 600 | 15 | 5 | 150 |
| **454**090 | 900 | 15 | 5 | 150 |

## Drain cock for radiators



## 560

Drain cock for radiators and wall-mounted boilers.
The 10-piece pack includes an extractor code 560000.

Maximum working pressure: 10 bar
Medium temperature range: 5–100 °C
Finish: nickel plated

| Code | Connection | Notes | | |
|---|---|---|---|---|
| **560**421 | 1/2″ M | drain cock | 10 | - |
| **560**000 | - | extractor hose connection | 25 | - |

# SPARE PARTS FOR RADIATOR VALVES

## Spare parts for radiator valves



Spare headworks for **convertible and thermostatic radiator valves** 338, 339, 401, 402, 220, 221, 222, 223, 224, 227, 225 and 226 series.
Only for 3/8" and 1/2" sizes.

| Code | | |
|---|---|---|
| F39146 | 1 | 10 |



Spare headworks for **convertible radiator valves with pre-setting** 425, 426, 421 and 422 series.
Only for 3/8" and 1/2" sizes.

| Code | | |
|---|---|---|
| F49290 | 1 | 10 |



### 230

Spare headworks for **dynamic thermostatic radiator valves** 230, 231, 232, 233, 234 and 237 series.
INTERNATIONAL APPLICATION PENDING

| Code | | |
|---|---|---|
| **230**000 | 1 | - |



### 338

Spare headworks for **reverse flow**.
For **convertible and thermostatic radiator valves** 338, 339, 401, 402, 220, 221, 222, 223, 224, 227, 225 and 226 series for 3/8" and 1/2" sizes.

| Code | | |
|---|---|---|
| **338**000 | 1 | 10 |



### 421

Spare headworks **for reverse flow** for convertible radiator valves with pre-setting 421, 422, 425 and 426 series.
Only for 3/8" and 1/2" sizes.
PATENT PENDING

| Code | | |
|---|---|---|
| **421**000 | 1 | 10 |



Spare internal valve assembly fits radiator valves.

| Code | | |
|---|---|---|
| F36073 | 1 | - |



### 3872

Replacement kit for radiator valves headwork.
**Only for 3/8" and 1/2" valves**.
Complete with 20 spare headworks (only for valves without pre-setting).
For valves 338, 339, 401, 402, 425,426, 421, 422, 230, 231,232, 233, 234, 237, 220,221, 222, 223, 224, 225, 226, 227, 456 and 4005 series.

| Code | | |
|---|---|---|
| **3872**01 | 1 | 4 |



### 3872

Adapting kit for headwork tool code 387200 to new headwork tool code 387201.

| Code | | |
|---|---|---|
| **3872**11 | 1 | 4 |



Spare knob for convertible radiator valves 338 and 339 series.
For convertible radiator valves 338 and 339 series.

| Code | Article use | | |
|---|---|---|---|
| R36074 | 338302, 339302, 401302, 402302, 338402, 338452, 339402, 339452, 401402, 402402 | 1 | - |
| R46036 | 401500, 402500, 401603, 402603 | 1 | - |



Spare plug for convertible radiator valves 338 and 339 series.

| Code | Article use | | |
|---|---|---|---|
| R36075 | 338302, 339302, 401302, 402302, 338402, 338452, 339402, 339452, 401402, 402402, 401500, 402500, 401603, 402603 | 1 | - |



Spare knob for convertible radiator valves 3380 series.

| Code | Article use | | |
|---|---|---|---|
| F36074/C | 338040 | 1 | - |



Spare plug for convertible radiator valves.

| Code | Article use | | |
|---|---|---|---|
| F36075/C | 338040, 400100, 400300, 400310, 400400, 400410 | 1 | - |



Spare sleeve for convertible radiator valve 338 and 339 series.

| Code | Article use | | |
|---|---|---|---|
| R36076 | 338302, 339302, 401302, 402302, 338402, 338452, 339402, 339452, 401402, 402402, 338040 | 1 | - |
| R46037 | 401500, 402500, 401603, 402603 | 1 | - |



Knob for lockshields.
For convertible radiator valves and lockshields for designer heating systems 3380 series.

Finish: white

| Code | | |
|---|---|---|
| 449300 | 1 | 50 |



Knob for lockshields.
For convertible radiator valves and lockshields for designer heating systems 3380 series.

Finish: black

| Code | | |
|---|---|---|
| 449300 BLK | 1 | 50 |



Knob for lockshields 3380 series.
For convertible radiator valves and lockshields for designer heating systems 3380 series.

Finish: chrome plated

| Code | | |
|---|---|---|
| F46003/C | 1 | - |



Adapter for installing thermostatic and thermo-electric actuator with valves 338, 339, 401, 402, 425, 426, 421, 422, 455 and 456 series.

| Code | | |
|---|---|---|
| F36077 | 1 | 50 |



Knob.
For manual radiator valves 340, 341, 411, 412 series

Finish: white

| Code | | |
|---|---|---|
| 449200 | 1 | 30 |
| 449210 | 1 | 30 |



Union with rubber seal.
For convertible radiator valves 338 and 339 series.

| Code | Article use | | |
|---|---|---|---|
| R49176/C | 338302, 339302, 401302, 402302 | 1 | - |
| R49175/C | 338402, 338452, 339402, 339452, 401402, 402402 | 1 | - |



Tailpiece and O-Ring.

| Code | Article use | | |
|---|---|---|---|
| R49094/C | 401500, 402500 | 1 | - |



Nut.

| Code | Article use | | |
|---|---|---|---|
| R61008/C | 401500, 402500 | 1 | - |



O-Ring seal.

| Code | Article use | | |
|---|---|---|---|
| R47021 | 588050, 588150, 588051, 588151 | 1 | - |

# Spare parts for high-style convertible radiator valves



## 4000

Pipe-covering/wall-covering finishing shell for series 4001, 4003 and 4004 HIGH-STYLE convertible radiator valves .

Finish: chrome plated

| Code | | |
|---|---|---|
| **4000**01 | 1 | - |



## 4000

Pipe-covering/wall-covering finishing shell for series 4001, 4003 and 4004 HIGH-STYLE convertible radiator valves .

Finish: white

| Code | | |
|---|---|---|
| **4000**11 | 1 | - |



## 4000

Pipe-covering/wall-covering finishing shell for series 4001, 4003 and 4004 HIGH-STYLE convertible radiator valves .

Finish: black

| Code | | |
|---|---|---|
| **4000**13 | 1 | - |



## 4000

Pipe-covering/wall-covering finishing shell for series 4003 and 4004 HIGH-STYLE convertible radiator valves with central connection.

Finish: chrome plated

| Code | | |
|---|---|---|
| **4000**02 | 1 | - |



## 4000

Pipe-covering/wall-covering finishing shell for series 4001, 4003 and 4004 HIGH-STYLE convertible radiator valves .

Finish: white

| Code | | |
|---|---|---|
| **4000**12 | 1 | - |



Spare knob for convertible radiator valves HIGH-STYLE.
For one-pipe or two-pipe radiator valves for designer heating systems 4005 series.

Finish: chrome plated

| Code | | |
|---|---|---|
| F46063/C | 1 | - |



Spare plug for convertible radiator valves.

| Code | Article use | | |
|---|---|---|---|
| F36075/C | 338040, 400100, 400300, 400310, 400400, 400410 | 1 | - |



Spare sleeve for convertible radiator valve 338 and 339 series.

| Code | Article use | | |
|---|---|---|---|
| R36076 | 338302, 339302, 401302, 402302, 338402, 338452, 339402, 339452, 401402, 402402, 338040 | 1 | - |



Knob for HIGH-STYLE lockshields 4001, 4003, 4004 Series.

Finish: chrome plated

| Code | | |
|---|---|---|
| F41436/PC | 1 | - |



Knob for HIGH-STYLE lockshields 4001, 4003, 4004 Series.

Finish: white

| Code | | |
|---|---|---|
| F41436/B | 1 | - |

# VALVES FOR PANEL RADIATORS

## Valves for panel radiators - double fitting



### 3010

Valve for panel radiators with built-in thermostatic valve unit.
Straight version.
One-pipe.
With adjustable by-pass.
With non-return device.

Maximum working pressure: 10 bar
Medium temperature range: 5–100 °C

| Code | Radiator connection | Pipe connection | | |
|---|---|---|---|---|
| **3010**43 | 1/2″ M | 3/4″ M | 1 | 25 |
| **3010**53 | 3/4″ F | 3/4″ M | 1 | 25 |



### 3011

Valve for panel radiators with built-in thermostatic valve unit.
Angled version.
One-pipe.
With adjustable by-pass.
With non-return device.

Maximum working pressure: 10 bar
Medium temperature range: 5–100 °C

| Code | Radiator connection | Pipe connection | | |
|---|---|---|---|---|
| **3011**43 | 1/2″ M | 3/4″ M | 1 | 25 |
| **3011**53 | 3/4″ F | 3/4″ M | 1 | 25 |



### 3012

Valve for panel radiators with built-in thermostatic valve unit.
Floor connections.
Straight version.
One-pipe.
With adjustable by-pass.
With non-return device.

Maximum working pressure: 10 bar
Medium temperature range: 5–100 °C

| Code | Radiator connection | Pipe connection | | |
|---|---|---|---|---|
| **3012**41 | 3/4″ M | 1/2″ M | 1 | 25 |
| **3012**50 | 3/4″ F | 3/4″ F | 1 | 25 |



### 3013

Valve for panel radiators with built-in thermostatic valve unit.
Wall connections.
Angled version.
One-pipe.
With adjustable by-pass.
With non-return device.

Maximum working pressure: 10 bar
Medium temperature range: 5–100 °C

| Code | Radiator connection | Pipe connection | | |
|---|---|---|---|---|
| **3013**41 | 1/2″ M | 1/2″ M | 1 | 25 |
| **3013**50 | 3/4″ M | 3/4″ F | 1 | 25 |

## Valves for panel radiators - single fitting



### 3015

Single valve for panel radiators with built-in thermostatic valve unit.
Wall connections.
Angled version.

Maximum working pressure: 10 bar
Medium temperature range: 5–100 °C

| Code | Radiator connection | Pipe connection | | |
|---|---|---|---|---|
| **3015**40 | 3/4″ M | 1/2″ M | 1 | 50 |
| **3015**50 | 3/4″ M | 3/4″ F | 1 | 50 |

# ZONE AND MOTORISED VALVES, DISTRIBUTION MANIFOLDS, BOXES AND ACCESSORIES



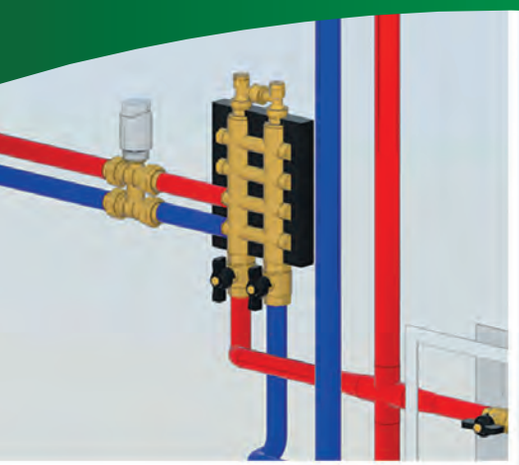

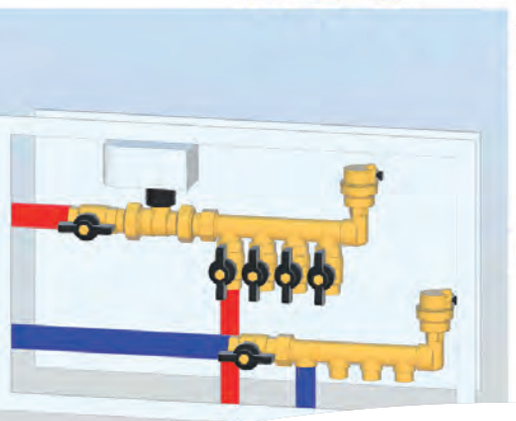

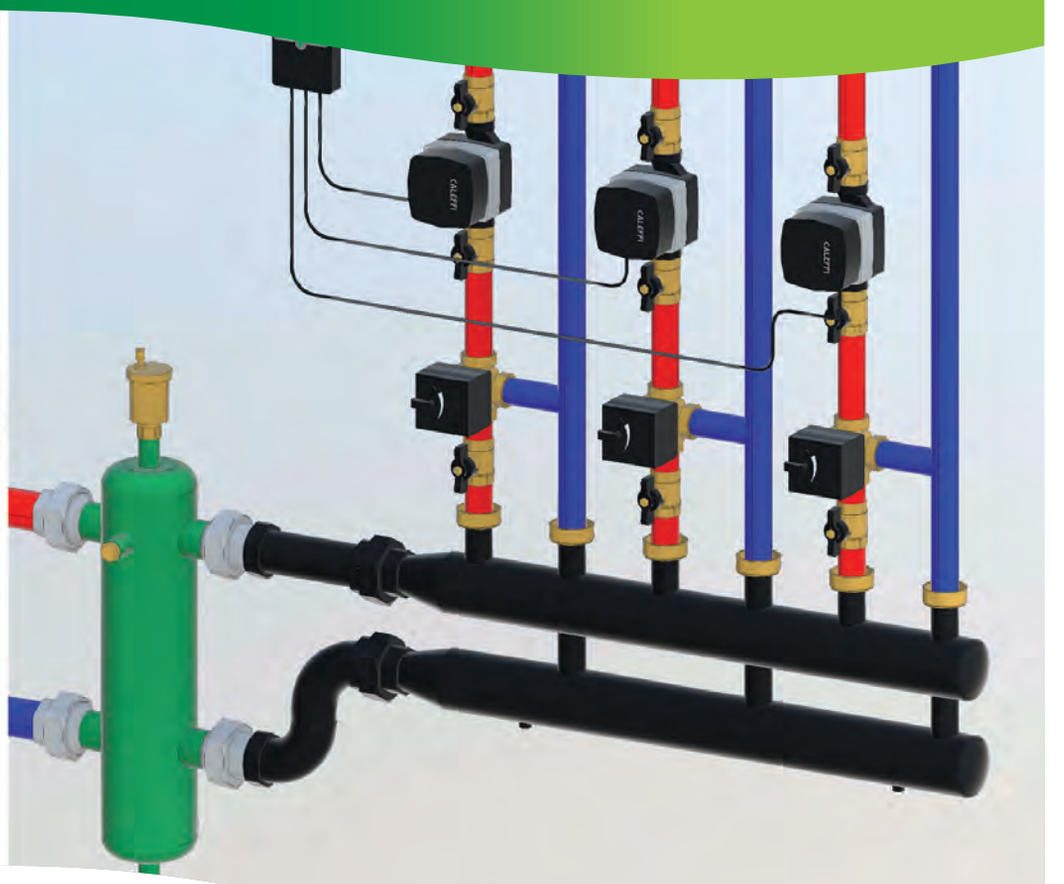

*Diagrams made with BIM families:* ***bim.caleffi.com***

**Zone/diverter valves**
**Single distribution manifolds**
**Dual distribution manifolds**
**Distribution manifolds with shut-off and pre-regulating valves**
**Thermo-electric actuators**
**Accessories**
**Fittings**
**Inspection wall boxes and wall ports**

# TWO-WAY AND THREE-WAY VALVES, DISTRIBUTION MANIFOLDS AND BOXES

The zone valves perform the function of automatically shutting off the flow rate of the vector medium distributed to the system.
In particular:
- in zone heating systems, they assist in ambient temperature regulation;
- in domestic hot water production and storage systems they regulate the temperature inside storage boilers;
- in residential and industrial systems they shut off the medium in the distribution networks.

## Zone valves and motorised valves

**- Motorised ball zone valves**

**- Thermo-electric zone piston valves**

**- Motorised zone valves with spring return**

**- Motorised ball valves**

**- Motorised ball valves for high flow rates**

**- Motorised valves for central heating systems**

**- Butterfly valves**

## Distribution manifolds and boxes

**- Single manifolds**

**- Dual manifolds**

**- Manifolds with shut-off and pre-adjustment valves**

**- Thermo-electric actuators**

**- Fittings**

**- Plastic inspection wall boxes**

**- Sheet metal inspection wall boxes**

# ZONE VALVES AND MOTORISED VALVES

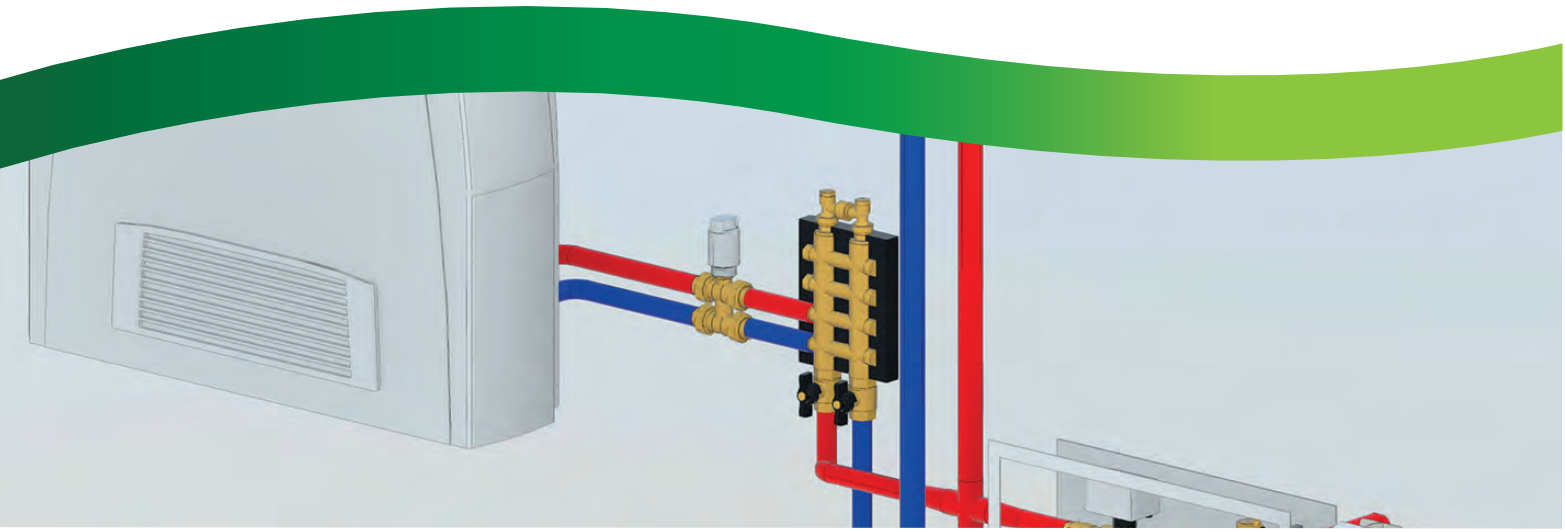

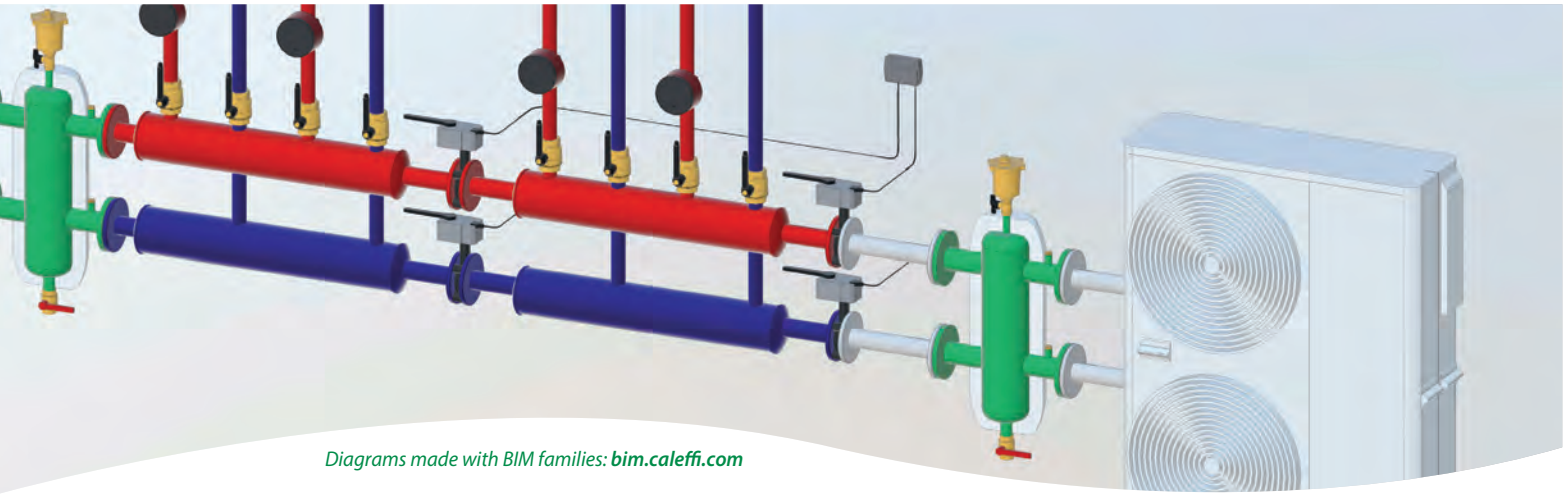

*Diagrams made with BIM families:* ***bim.caleffi.com***

**Motorised two-way ball zone valves**
**Motorised three-way ball zone valves**
**Motorised three-way ball zone valves by-pass version**
**Motorised three-way ball zone valves with telescopic by-pass tee**
**Accessories and spare parts for motorised ball valve**
**Motorised ball zone valves with insulation**
**Motorised two-way ball valves for high flow rates**
**Motorised three-way ball valves for high flow rates - “T” drilling**
**Motorised three-way ball valves for high flow rates - “L” drilling**
**Thermo-electric piston zone valves**
**Thermo-electric actuator for piston zone valves**
**Piston zone valves thermo-electric**
**Motorised zone valves with spring return**

## TWO-WAY VALVES

| | Actuator | Application | Type of valve | | | | Type of actuator | | | Control signal | | |
|---|---|---|---|---|---|---|---|---|---|---|---|---|
| | | | ball | piston | paddle | butterfly | thermo-electric | motorised | motorised with spring return | 2 points | 3 points | |
| |  | | | | ● | | | | ● | ● | | |
| | 656.  |  | | ● | | | ● | | | ● | | |
| |  | | ● | | | | | ● | | ● (R) | | |
| |  | | ● | | | | | ● | | | ● | |
| |  | | ● | | | | | ● | | | ● | |
| |  | | ● | | | | | ● | | ● (R) | | |
| |  | (kit) | ● | | | | | ● | | | ● | |

*Legend*

- *For heating systems*
- *For cooling systems*
- *Suitable for cooling with the use of insulation*
- **For domestic water systems (check legislation in individual countries)**

*(R)* *with internal relay*
*(kit)* *with optional insulation kit*

## THREE-WAY VALVES

| | Actuator | Application | Type of valve | | | Type of actuator | | | Control signal | |
|---|---|---|---|---|---|---|---|---|---|---|
| | | | ball | piston | paddle | thermo-electric | motorised | motorised with spring return | 2 points | 3 points |
| **643**  | | | | | ● | | | ● | ● | |
| **677**  | **656.**  | | | ● | | ● | | | ● | |
| **678**  | **656.**  | | | ● | | ● | | | ● | |
| **633**  | **630**  | | | ● | | ● | | | ● | |
| **6453**  | | | ● | | | | ● | | ● (R) | |
| **6443** (40 sec)  | | (kit) | ● | | | | ● | | | ● |
| **6443** (10 sec)  | | (kit) | ● | | | | ● | | | ● |
| **6443.. 3BY**  | | | ● | | | | ● | | | ● |
| **6444**  | | | ● | | | | ● | | | ● |
| **638** ("T" drilling)  | | (kit) | ● | | | | ● | | | ● |
| **638** ("L" drilling)  | | (kit) | ● | | | | ● | | | ● |

# ZONE/DIVERTER VALVES

## Motorised two-way ball zone valves

### 10 s - 3 point



## 6442

Motorised two-way ball valve.
Complete with **three-point control** actuator.
**With auxiliary microswitch**.

Maximum working pressure: 10 bar
Medium temperature range: -5–110 °C
Ambient temperature range: 0–55 °C
Protection class: IP 40 (horizontal position), IP 44 (vertical position)
Supply cable length: 1 m
Auxiliary microswitch contact rating (230 V): 0,8 A
Operating time: 10 s (90° rotation)

| Code | Connection | Electric supply | Kv ($m^3/h$) | | |
|---|---|---|---|---|---|
| **644246** | 1/2" M | 230 V AC | 11,1 | 1 | 10 |
| **644256** | 3/4" M | 230 V AC | 11,1 | 1 | 10 |
| **644248** | 1/2" M | 24 V AC | 11,1 | 1 | 10 |
| **644258** | 3/4" M | 24 V AC | 11,1 | 1 | 10 |

### 10 s - 2 point



## 6446 NEW

Motorised two-way ball valve.
Complete with **two-point control actuator**.
**With auxiliary microswitch**.

Maximum working pressure: 10 bar
Medium temperature range: -5–110 °C
Ambient temperature range: 0–55 °C
Protection class: IP 54
Supply cable length: 1 m
Auxiliary microswitch contact rating (230 V): 8 (2) A
Operating time: 10 s (90° rotation)

| Code | Connection | Electric supply | Kv ($m^3/h$) | | |
|---|---|---|---|---|---|
| **644646** | 1/2" M | 230 V AC | 11,1 | 1 | 6 |
| **644656** | 3/4" M | 230 V AC | 11,1 | 1 | 6 |

### 40 s - 3 point



## 6442

Motorised two-way ball zone valve.
Complete with **three-point control** actuator.
**Operating time 40s.**
**With auxiliary microswitch**.

Maximum working pressure: 10 bar
Medium temperature range: -5–110 °C
Ambient temperature range: 0–55 °C
Protection class: IP 44 (vertical position), IP 40 (horizontal position)
Supply cable length: 1 m
Auxiliary microswitch contact rating (230 V): 0,8 A
Operating time: 40 s (90° rotation)

| Code | Connection | Electric supply | Kv ($m^3/h$) | | |
|---|---|---|---|---|---|
| **644242** | 1/2" M | 230 V AC | 11,1 | 1 | 10 |
| **644252** | 3/4" M | 230 V AC | 11,1 | 1 | 10 |
| **644262** | 1" M | 230 V AC | 11,1 | 1 | 10 |
| **644244** | 1/2" M | 24 V AC | 11,1 | 1 | 10 |
| **644254** | 3/4" M | 24 V AC | 11,1 | 1 | 10 |
| **644264** | 1" M | 24 V AC | 11,1 | 1 | 10 |

# Motorised three-way ball zone valves

## 10 s - 3 point



### 6443

Motorised three-way ball diverter valve.
Complete with **three-point control** actuator.
**With auxiliary microswitch**.

Maximum working pressure: 10 bar
Medium temperature range: -5–110 °C
Ambient temperature range: 0–55 °C
Protection class: IP 40 (horizontal position), IP 44 (vertical position)
Supply cable length: 1 m
Auxiliary microswitch contact rating (230 V): 0,8 A
Operating time: 10 s (90° rotation)

| Code | Connection | Electric supply | Kv ($m^3/h$) | | |
|---|---|---|---|---|---|
| **644**346 | 1/2" M | 230 V AC | 3,9 | 1 | 5 |
| **644**356 | 3/4" M | 230 V AC | 3,9 | 1 | 5 |
| **644**357 | 3/4" M | 230 V AC | 8,6 | 1 | 5 |
| **644**366 | 1" M | 230 V AC | 9,0 | 1 | 5 |
| **644**348 | 1/2" M | 24 V AC | 3,9 | 1 | 5 |
| **644**358 | 3/4" M | 24 V AC | 3,9 | 1 | 5 |
| **644**359 | 3/4" M | 24 V AC | 8,6 | 1 | 5 |
| **644**368 | 1" M | 24 V AC | 9,0 | 1 | 5 |

## 10 s - 2 point



### 6447 NEW

Motorised three-way diverter valve.
Complete with **two-point control actuator**.
**With auxiliary microswitch**.

Maximum working pressure: 10 bar
Medium temperature range: -5–110 °C
Ambient temperature range: 0–55 °C
△p max.: 10 bar
Protection class: IP 54
Supply cable length: 1 m
Auxiliary microswitch contact rating (230 V): 0,8 A
Operating time: 10 s (90° rotation)

| Code | Connection | Electric supply | Kv ($m^3/h$) | | |
|---|---|---|---|---|---|
| **644**746 | 1/2" M | 230 V AC | 3,9 | 1 | 6 |
| **644**756 | 3/4" M | 230 V AC | 3,9 | 1 | 6 |
| **644**766 | 1" M | 230 V AC | 9 | 1 | 6 |

## 40 s - 3 point



### 6443

Motorised three-way diverter valve.
Complete with **three-point control** actuator.
**With auxiliary microswitch**.

Maximum working pressure: 10 bar
Medium temperature range: -5–110 °C
Ambient temperature range: 0–55 °C
Protection class: IP 44 (vertical position), IP 40 (horizontal position)
Supply cable length: 1 m
Auxiliary microswitch contact rating (230 V): 0,8 A
Operating time: 40 s (90° rotation)

| Code | Connection | Electric supply | Kv ($m^3/h$) | | |
|---|---|---|---|---|---|
| **644**342 | 1/2" M | 230 V AC | 3,9 | 1 | 5 |
| **644**352 | 3/4" M | 230 V AC | 3,9 | 1 | 5 |
| **644**353 | 3/4" M | 230 V AC | 8,6 | 1 | 5 |
| **644**362 | 1" M | 230 V AC | 9,0 | 1 | 5 |
| **644**344 | 1/2" M | 24 V AC | 3,9 | 1 | 5 |
| **644**354 | 3/4" M | 24 V AC | 3,9 | 1 | 5 |
| **644**355 | 3/4" M | 24 V AC | 8,6 | 1 | 5 |
| **644**364 | 1" M | 24 V AC | 9,0 | 1 | 5 |

## Motorised three-way ball zone valves by-pass version



### 6443...3BY

Motorised three-way ball zone valve, by-pass version.
Complete with **three-point control** actuator.
**Operating time 40s.**
**With auxiliary microswitch**.

Maximum working pressure: 10 bar
Medium temperature range: -5–110 °C
Ambient temperature range: 0–55 °C
Protection class: IP 44 (vertical position), IP 40 (horizontal position)
Supply cable length: 1 m
Auxiliary microswitch contact rating (230 V): 0,8 A
Operating time: 40 s (90° rotation)

| Code | Connection | Electric supply | Kv straight ($m^3/h$) | Kv by-pass ($m^3/h$) | | |
|---|---|---|---|---|---|---|
| 644342 3BY | 1/2" M | 230 V AC | 10,3 | 1,8 | 1 | 5 |
| 644352 3BY | 3/4" M | 230 V AC | 10,3 | 1,8 | 1 | 5 |
| 644362 3BY | 1" M | 230 V AC | 10,3 | 1,8 | 1 | 5 |
| 644344 3BY | 1/2" M | 24 V AC | 10,3 | 1,8 | 1 | 5 |
| 644354 3BY | 3/4" M | 24 V AC | 10,3 | 1,8 | 1 | 5 |
| 644364 3BY | 1" M | 24 V AC | 10,3 | 1,8 | 1 | 5 |

## Motorised three-way ball zone valves with telescopic by-pass tee



### 6444

Motorised three-way ball zone valve with telescopic by-pass tee.
Complete with **three-point control** actuator.
Tee complete with U6 nozzle.
Centre distance between connections adjustable from 49 to 63 mm.
**With auxiliary microswitch**.

Maximum working pressure: 10 bar
Medium temperature range: -5–110 °C
Ambient temperature range: 0–55 °C
Protection class: IP 44 (vertical position), IP 40 (horizontal position)
Supply cable length: 1 m
Auxiliary microswitch contact rating (230 V): 0,8 A
Operating time: 40 s (90° rotation)

| Code | Connection | Electric supply | Kv straight ($m^3/h$) | Kv by-pass ($m^3/h$) | | |
|---|---|---|---|---|---|---|
| **6444**42 | 1/2" M | 230 V AC | 10,3 | 1,2 | 1 | 5 |
| **6444**52 | 3/4" M | 230 V AC | 10,3 | 1,2 | 1 | 5 |
| **6444**62 | 1" M | 230 V AC | 10,3 | 1,2 | 1 | 5 |
| **6444**44 | 1/2" M | 24 V AC | 10,3 | 1,2 | 1 | 5 |
| **6444**54 | 3/4" M | 24 V AC | 10,3 | 1,2 | 1 | 5 |
| **6444**64 | 1" M | 24 V AC | 10,3 | 1,2 | 1 | 5 |

# Accessories and spare parts for motorised ball valve



## 6440 NEW

Two-point control spare actuator for motorised ball zone valves 6446, 6447 series.

Ambient temperature range: 0–55 °C
Protection class: IP 54
Supply cable length: 1 m

| Code | Electric supply | Operating time | | |
|---|---|---|---|---|
| **6440**52 | 230 V AC | 10 s (90° rotation) | 1 | 10 |



## 6440

Spare **three-point control** actuator for motorised ball zone valves 6445 series.

Ambient temperature range: 0–55 °C
Protection class: IP 54
Supply cable length: 1 m

| Code | Electric supply | Operating time | | |
|---|---|---|---|---|
| **6440**22 | 230 V AC | 40 s (90° rotation) | 1 | 10 |
| **6440**32 | 230 V AC | 10 s (90° rotation) | 1 | 10 |



## 6440

Spare **three-point control** actuator for motorised ball zone valve 6443 series.

Ambient temperature range: 0–55 °C
Protection class: IP 54
Supply cable length: 1 m

| Code | Electric supply | Operating time | | |
|---|---|---|---|---|
| **6440**24 | 24 V AC | 40 s (90° rotation) | 1 | 10 |
| **6440**34 | 24 V AC | 10 s (90° rotation) | 1 | 10 |



Tailpiece, nut and O-Ring.
For motorized zone valves 6470, 648 and 644 series.

| Code | Connection 1 | Connection 2 | | |
|---|---|---|---|---|
| R69276 | 1/2" M | 3/4" F | 1 | - |
| R69277 | 3/4" M | 1" F | 1 | - |
| R69280 | 1" M | 1 1/4" F | 1 | - |
| R59466 | 1 1/4" M | 1 1/2" F | 1 | - |



## 6443

Insulation kit for use in heating and air-conditioning systems.
For 644 series three-way motorised valves.

| Code | Article use | | |
|---|---|---|---|
| CBN644357 | 644353, 644357, 644362, 644366, 644355, 644359, 644364, 644368 | 1 | - |

**Wiring diagram for three-point control actuator**

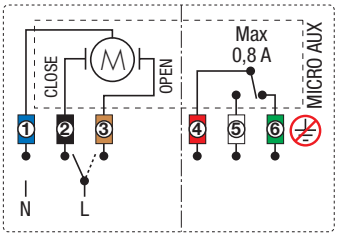


**Wiring diagram for two-point control actuator**

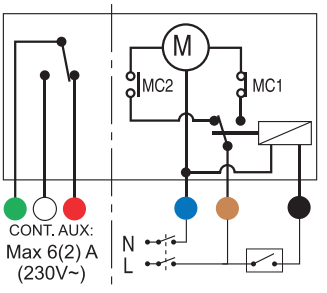

## Motorised ball zone valves with insulation



### 6452

Two-way motorised ball zone valve for heating and cooling systems.
Complete with **two-point control** actuator.

With manual opening lever.
**With insulation**.
**With auxiliary microswitch**.

Maximum working pressure: 10 bar
Medium temperature range: -10–110 °C
Ambient temperature range: -10–55 °C
△p max.: 10 bar
Protection class: IP 65
Supply cable length: 0,8 m
Auxiliary microswitch contact rating (230 V): 6 (2) A
Operating time: 50 s
Rotation: 90°

CE EN 13

| Code | Connection | Electric supply | Kv ($m^3/h$) | | |
|---|---|---|---|---|---|
| **645242** | 1/2″ M | 230 V AC | 17,00 | 1 | - |
| **645252** | 3/4″ M | 230 V AC | 17,27 | 1 | - |
| **645262** | 1″ M | 230 V AC | 36,58 | 1 | - |
| **645272** | 1 1/4″ M | 230 V AC | 39,50 | 1 | - |
| **645244** | 1/2″ M | 24 V AC | 17,00 | 1 | - |
| **645254** | 3/4″ M | 24 V AC | 17,27 | 1 | - |
| **645264** | 1″ M | 24 V AC | 36,58 | 1 | - |
| **645274** | 1 1/4″ M | 24 V AC | 39,50 | 1 | - |



### 6453

Three-way motorised ball zone valve, for heating and cooling systems.
Complete with **two-point control** actuator.
With manual opening knob

**With insulation**.
**With auxiliary microswitch**.

Maximum working pressure: 10 bar
Medium temperature range: -10–110 °C
Ambient temperature range: -10–55 °C
△p max.: 10 bar
Protection class: IP 65
Supply cable length: 0,8 m
Auxiliary microswitch contact rating (230 V): 6 (2) A
Operating time: 50 s
Rotation: 90°

CE EN 13

| Code | Connection | Electric supply | Kv straight ($m^3/h$) | Kv by-pass ($m^3/h$) | | |
|---|---|---|---|---|---|---|
| **645342** | 1/2″ M | 230 V AC | 14,10 | 2,45 | 1 | - |
| **645352** | 3/4″ M | 230 V AC | 14,43 | 2,50 | 1 | - |
| **645362** | 1″ M | 230 V AC | 33,52 | 3,60 | 1 | - |
| **645372** | 1 1/4″ M | 230 V AC | 36,00 | 3,80 | 1 | - |
| **645344** | 1/2″ M | 24 V AC | 14,10 | 2,45 | 1 | - |
| **645354** | 3/4″ M | 24 V AC | 14,43 | 2,50 | 1 | - |
| **645364** | 1″ M | 24 V AC | 33,52 | 3,60 | 1 | - |
| **645374** | 1 1/4″ M | 24 V AC | 36,00 | 3,80 | 1 | - |



### 6459

By-pass tee.
For 6453 series motorised ball zone valves.
**With insulation**.

Maximum working pressure: 10 bar
Medium temperature range: -10–110 °C

| Code | Connection | Kv by-pass valve + tee ($m^3/h$) | | |
|---|---|---|---|---|
| **645940** | 1/2″ M without nozzle | 2,20 | 1 | - |
| **645950** | 3/4″ M without nozzle | 2,25 | 1 | - |
| **645960** | 1″ M without nozzle | 3,25 | 1 | - |
| **645970** | 1 1/4″ M without nozzle | 3,40 | 1 | - |



### 6450

Spare **two-point control** actuator for motorised ball zone valves 6452 and 6453 series.

Protection class: IP 65
Supply cable length: 0,8 m
Ambient temperature range: -10–55 °C

CE EN 13

| Code | Electric supply | Operating time (s) | Rotation | | |
|---|---|---|---|---|---|
| **645002** | 230 V AC | 50 | 90° | 1 | - |
| **645004** | 24 V AC | 50 | 90° | 1 | - |



### 6459

Shell insulation for motorised ball zone valves 6453 series with by-pass tee 6459 and 6490 series.
Usable with 356.IS series manifolds.

| Code | Article use | | |
|---|---|---|---|
| **645901** | 645342, 645344, 645352, 645354, 645940, 645950 | 1 | - |
| **645900** | 645362, 645364, 645372, 645374, 645960, 645970 | 1 | - |

**Wiring diagram for 6452 and 6453 series valves, two-point actuator with internal relais, valve in closed position**

- R relay
- MC1 opening end microswitch.
- MC2 closing end microswitch.
- MICRO AUX free auxiliary microswitch.

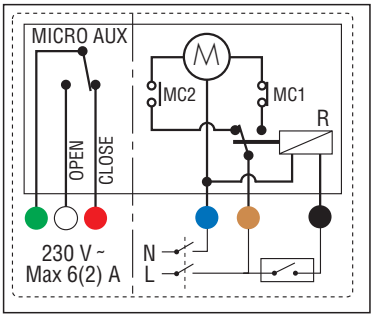

# Motorised two-way ball valves for high flow rates



## 638

Motorised two-way ball valve.
Complete with **three-point control** actuator.
Actuator torque 15 N·m.
**With auxiliary microswitch**.

Maximum working pressure: 16 bar
Medium temperature range: -10–110 °C
Ambient temperature range: -10–55 °C
△p max.: 10 bar
Protection class: IP 65
Auxiliary microswitch contact rating (230 V): 6 (2) A
Operating time: 50 s
Rotation: 90°

| Code | Connection | Electric supply | Kv ($m^3/h$) | | |
|---|---|---|---|---|---|
| **638**052 | 3/4" M | 230 V AC | 17 | 1 | - |
| **638**062 | 1" M | 230 V AC | 36,5 | 1 | - |
| **638**072 | 1 1/4" M | 230 V AC | 48 | 1 | - |
| **638**082 | 1 1/2" M | 230 V AC | 77 | 1 | - |
| **638**092 | 2" M | 230 V AC | 140 | 1 | - |
| **638**054 | 3/4" M | 24 V AC | 17 | 1 | - |
| **638**064 | 1" M | 24 V AC | 36,5 | 1 | - |
| **638**074 | 1 1/4" M | 24 V AC | 48 | 1 | - |
| **638**084 | 1 1/2" M | 24 V AC | 77 | 1 | - |
| **638**094 | 2" M | 24 V AC | 140 | 1 | - |



## 638

Spare **three-point control** actuators for motorised two and three-way valves, "T" drilling version 638 series.

Ambient temperature range: -10–55 °C
Protection class: IP 54
Supply cable length: 1 m

| Code | Electric supply | Electric supply | Operating time | | |
|---|---|---|---|---|---|
| **638**012 | 230 V AC | 230 V AC | 50 s (rotazione 90°) | 1 | - |
| **638**014 | 24 V AC | 24 V AC | 50 s (rotazione 90°) | 1 | - |



## 638

Insulation kit for use in heating and cooling systems.
For 638 series two-way motorised valves.

| Code | Article use | | |
|---|---|---|---|
| CBN638052 | 638052, 638054 | 1 | - |
| CBN638062 | 638062, 638064 | 1 | - |
| CBN638072 | 638072, 638074 | 1 | - |
| CBN638082 | 638082, 638084, 638092, 638094 | 1 | - |



## 638

Insulation kit for use in heating and cooling systems.
For 638 series three-way motorised valves.

| Code | Article use | | |
|---|---|---|---|
| CBN638053 | 638053, 638055 | 1 | - |
| CBN638063 | 638063, 638065 | 1 | - |
| CBN638073 | 638073, 638075 | 1 | - |
| CBN638083 | 638083, 638085, 638093, 638095 | 1 | - |
| CBN638153 | 638153, 638155 | 1 | - |
| CBN638163 | 638163, 638165 | 1 | - |
| CBN638173 | 638173, 638175, 638373 | 1 | - |
| CBN638183 | 638183, 638185, 638193, 638195, 638383 | 1 | - |

**Wiring diagram for two-way and three-way ball valves 638 series with three-point control actuator**
Internal diagram with valve in the following position:
- Closed, for two-way valve.
- Port **A** closed for three-way valves.

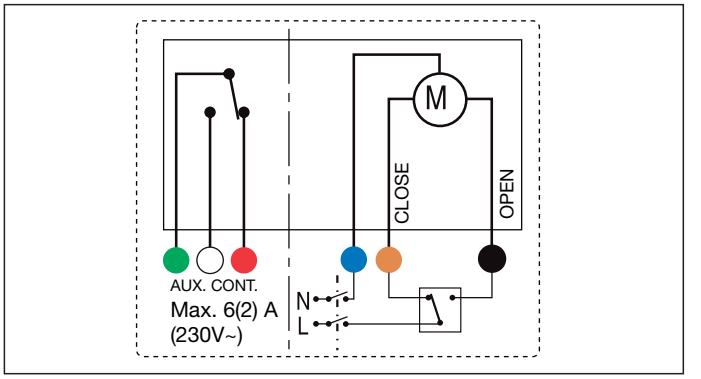

## Motorised three-way ball valves for high flow rates - "T" drilling



### 638

Motorised three-way ball valve, 90° rotation - "T" drilling.
Reduced bore. With **three-point control** actuator.
Actuator torque 15 N·m.
**With auxiliary microswitch**.

Maximum working pressure: 16 bar
Medium temperature range: -10–110 °C
Ambient temperature range: -10–55 °C
Protection class: IP 65
Auxiliary microswitch contact rating (230 V): 6 (2) A
Operating time: 50 s
Rotation: 90°

| Code | Connection | Electric supply | Kv ($m^3/h$) | | |
|---|---|---|---|---|---|
| **638**153 | 3/4" M | 230 V AC | 9,5 | 1 | - |
| **638**163 | 1" M | 230 V AC | 12,9 | 1 | - |
| **638**173 | 1 1/4" M | 230 V AC | 24,7 | 1 | - |
| **638**183 | 1 1/2" M | 230 V AC | 47 | 1 | - |
| **638**193 | 2" M | 230 V AC | 50 | 1 | - |
| **638**155 | 3/4" M | 24 V AC | 9,5 | 1 | - |
| **638**165 | 1" M | 24 V AC | 12,9 | 1 | - |
| **638**175 | 1 1/4" M | 24 V AC | 24,7 | 1 | - |
| **638**185 | 1 1/2" M | 24 V AC | 47 | 1 | - |
| **638**195 | 2" M | 24 V AC | 50 | 1 | - |



### 638

Spare **three-point control** actuators for motorised two and three-way valves, "T" drilling version 638 series.

Ambient temperature range: -10–55 °C
Protection class: IP 54
Supply cable length: 1 m

| Code | Electric supply | Operating time | | |
|---|---|---|---|---|
| **638**012 | 230 V AC | 50 s (rotazione 90°) | 1 | - |
| **638**014 | 24 V AC | 50 s (rotazione 90°) | 1 | - |

**Applications "T" drilling**

| Diverter | Mixing |
|---|---|
| 1 inlet - 2 outlets | 2 inlets - 1 outlet |

## Motorised three-way ball valves for high flow rates - "L" drilling



### 638

Motorised three-way ball valve, 180° rotation - "L" drilling.
Reduced bore. With **three-point control** actuator.
Actuator torque 15 N·m.
**With auxiliary microswitch**.

Maximum working pressure: 16 bar
Medium temperature range: -10–110 °C
Ambient temperature range: -10–55 °C
Protection class: IP 65
Auxiliary microswitch contact rating (230 V): 6 (2) A

| Code | Connection | Electric supply | Kv ($m^3/h$) | | |
|---|---|---|---|---|---|
| **638**053 | 3/4" M | 230 V AC | 9,9 | 1 | - |
| **638**063 | 1" M | 230 V AC | 13,4 | 1 | - |
| **638**073 | 1 1/4" M | 230 V AC | 22,8 | 1 | - |
| **638**083 | 1 1/2" M | 230 V AC | 44 | 1 | - |
| **638**093 | 2" M | 230 V AC | 50 | 1 | - |
| **638**055 | 3/4" M | 24 V AC | 9,9 | 1 | - |
| **638**065 | 1" M | 24 V AC | 13,4 | 1 | - |
| **638**075 | 1 1/4" M | 24 V AC | 22,8 | 1 | - |
| **638**085 | 1 1/2" M | 24 V AC | 44 | 1 | - |
| **638**095 | 2" M | 24 V AC | 50 | 1 | - |



### 638

Spare **three-point control** actuator for three-way motorised ball valves, "L" drilling version, 638 series.

Ambient temperature range: -10–55 °C
Protection class: IP 54
Supply cable length: 1 m

| Code | Electric supply | Operating time | | |
|---|---|---|---|---|
| **638**412 | 230 V AC | 100 s (rotazione 180°) | 1 | - |
| **638**414 | 24 V AC | 100 s (rotazione 180°) | 1 | - |

**Applications "L" drilling**

| Diverter | Diverter |
|---|---|
| 1 inlet - 2 outlets | 2 inlets - 1 outlet |

## Thermo-electric piston zone valves



### 676

Two-way zone valve with high flow rate.
For installation of series 6563, 6561, 6562 and 6564 thermo-electric actuators.

Maximum working pressure: 10 bar
Medium temperature range: 0–95 °C
△p max.: 2,5 bar

| Code | Connection | Kv ($m^3/h$) | | |
|---|---|---|---|---|
| **676**500 | 1″ M | 4,77 | 1 | 20 |



### 676

Two-way zone valve.
Designed for installation of series 6563, 6561, 6562 and 6564 thermo-electric actuators.

Maximum working pressure: 10 bar
Medium temperature range: 0–95 °C
△p max.: 1,2 bar

| Code | Connection | Kv ($m^3/h$) | | |
|---|---|---|---|---|
| **676**040 | 1/2″ M | 3,7 | 1 | 10 |
| **676**050 | 3/4″ M | 3,7 | 1 | 10 |
| **676**060 | 1″ M | 3,7 | 1 | 10 |



### 677

Three-way zone valve.
Designed for installation of series 6563, 6561, 6562 and 6564 thermo-electric actuators.

Maximum working pressure: 10 bar
Medium temperature range: 0–95 °C
△p max.: 1,2 bar

| Code | Connection | Kv straight ($m^3/h$) | Kv by-pass ($m^3/h$) | | |
|---|---|---|---|---|---|
| **677**040 | 1/2″ M | 3,7 | 1,0 | 1 | 10 |
| **677**050 | 3/4″ M | 3,7 | 1,0 | 1 | 10 |
| **677**060 | 1″ M | 3,7 | 1,0 | 1 | 10 |



### 678

Three-way zone valve with by-pass tee.
Designed for installation of series 6563, 6561, 6562 and 6564 thermo-electric actuators.
Adjustable outlet centre distance from 49 to 63 mm.
Tee complete with U6 nozzle.

Maximum working pressure: 10 bar
Medium temperature range: 0–95 °C
△p max.: 1,2 bar

| Code | Connection | Kv straight ($m^3/h$) | Kv by-pass ($m^3/h$) | | |
|---|---|---|---|---|---|
| **678**040 | 1/2″ M | 3,7 | 1,0 | 1 | 10 |
| **678**050 | 3/4″ M | 3,7 | 1,0 | 1 | 10 |
| **678**060 | 1″ M | 3,7 | 1,0 | 1 | 10 |



Spare headwork for thermo-electric piston zone valve 677 and 678 series.

| Code | Article use | | |
|---|---|---|---|
| F69221 | 677040, 677050, 677060, 678040, 678050, 678060 | 1 | - |



Spare headwork for thermo-electric piston zone valve 676 series.

| Code | Article use | | |
|---|---|---|---|
| F69240 | 676040, 676050, 676060 | 1 | - |

# Thermo-electric actuator for piston zone valves



## 6561

Thermo-electric actuator with auxiliary microswitch.
Normally closed.
For valves 338, 339, 401, 402, 425, 426, 421, 422, 455, 456, 220, 221, 222, 223, 224, 225, 226, 227, 230, 231, 232, 233, 234, 237, 676, 677, 678 series and manifolds 670, 671, 668. S1,664, 665 series.
**With auxiliary microswitch**.

Ambient temperature range: 0–50 °C
Protection class: IP 44 (vertical position)
Supply cable length: 0,8 m
Auxiliary microswitch contact rating (230 V): 0,8 A
Starting current: ≤ 1 A

CE

| Code | Electric supply | | |
|---|---|---|---|
| **6561**12 | 230 V AC | 1 | 10 |
| **6561**14 | 24 V AC/DC | 1 | 10 |



## 6561

Thermo-electric actuator.
Normally closed.
For valves 338, 339, 401, 402, 425, 426, 421, 422, 230, 231, 232, 233, 234, 237, 220, 221, 222, 223, 224, 225, 226, 227, 455 and 456 series.

Ambient temperature range: 0–50 °C
Protection class: IP 44 (vertical position)
Supply cable length: 0,8 m
Starting current: ≤ 1 A

CE

| Code | Electric supply | | |
|---|---|---|---|
| **6561**02 | 230 V AC | 1 | 10 |
| **6561**04 | 24 V AC/DC | 1 | 10 |



## 6563

Thermo-electric actuator **with manual opening and position indicator**.
Normally closed.
For valves 338, 339, 401, 402, 425, 426, 421, 422, 455, 456, 220, 221, 222, 223, 224, 225, 226, 227, 230, 231, 232, 233, 234, 237, 676, 677, 678 series and distribution manifolds 670, 671, 678.S1, 664 and 665 series.
**With auxiliary microswitch**.
PATENT

Ambient temperature range: 0–50 °C
Protection class: IP 40
Supply cable length: 0,8 m
Auxiliary microswitch contact rating (230 V): 0,8 A
Starting current: ≤ 1 A

CE

| Code | Electric supply | | |
|---|---|---|---|
| **6563**12 | 230 V AC | 1 | 10 |
| **6563**14 | 24 V AC/DC | 1 | 10 |



## 6563

Thermo-electric actuator **with manual opening and position indicator**.
Normally closed.
For valves 338, 339, 401, 402, 425, 426, 421, 422, 455, 456, 220, 221, 222, 223, 224, 225, 226, 227, 230, 231, 232, 233, 234, 237, 676, 677, 678 series and distribution manifolds 670, 671, 678.S1, 664 and 665 series.
PATENT

Ambient temperature range: 0–50 °C
Protection class: IP 40
Supply cable length: 0,8 m
Starting current: ≤ 1 A

CE

| Code | Electric supply | | |
|---|---|---|---|
| **6563**02 | 230 V AC | 1 | 10 |
| **6563**04 | 24 V AC/DC | 1 | 10 |



## 6563

Thermo-electric actuator **with low power consumption,** with auxiliary microswitch.
**With opening position indicator**.
Normally closed.
**With auxiliary microswitch**.
PATENT

Ambient temperature range: 0–50 °C
Running power consumption: 3 W
Protection class: IP 40
Supply cable length: 0,8 m
Starting current: ≤ 250 mA

CE

| Code | Notes | Electric supply | | |
|---|---|---|---|---|
| **6563**54 | - | 24 V AC/DC | 1 | 10 |
| **6563**44 | without auxiliary microswitch | 24 V AC/DC | 1 | 10 |



## 6562

Thermo-electric actuator **with opening position indicator**.
Normally closed.
Quick coupling installation, with a clip adapter.
For valves 338, 339, 401, 402, 425, 426, 421, 422, 455, 456, 220, 221, 222, 223, 224, 225, 226, 227, 230, 231, 232, 233, 234, 237, 676, 677, 678 series and manifolds 670, 671, 668. S1,664, 665 series.
**With auxiliary microswitch**.

Ambient temperature range: 0–50 °C
Protection class: IP 54
Supply cable length: 0,8 m
Auxiliary microswitch contact rating (230 V): 0,8 A
Starting current: ≤ 1 A

CE

| Code | Electric supply | | |
|---|---|---|---|
| **6562**12 | 230 V AC | 1 | 10 |
| **6562**14 | 24 V AC/DC | 1 | 10 |



## 6562

Thermo-electric actuator.
**With opening position indicator**.
Normally closed.
Quick coupling installation, with a clip adapter.
For valves 338, 339, 401, 402, 425, 426, 421, 422, 455, 456, 220, 221, 222, 223, 224, 225, 226, 227, 230, 231, 232, 233, 234, 237, 676, 677, 678 series and manifolds 670, 671, 668. S1,664, 665 series.

Ambient temperature range: 0–50 °C
Protection class: IP 54
Supply cable length: 0,8 m
Starting current: ≤ 1 A

CE

| Code | Electric supply | | |
|---|---|---|---|
| **6562**02 | 230 V AC | 1 | 10 |
| **6562**04 | 24 V AC/DC | 1 | 10 |



## 6564

Thermo-electric actuator **with low power consumption,** with auxiliary microswitch.
**With opening position indicator**.
Normally closed.
Quick coupling installation, with a clip adapter.
For valves 338, 339, 401, 402, 425, 426, 421, 422, 455, 456, 220, 221, 222, 223, 224, 225, 226, 227, 230, 231, 232, 233, 234, 237, 676, 677, 678 series and manifolds 670, 671, 668. S1,664, 665 series.
**With auxiliary microswitch**.

Ambient temperature range: 0–50 °C
Protection class: IP 54
Supply cable length: 0,8 m
Auxiliary microswitch contact rating (230 V): 0,8 A
Starting current: ≤ 250 (230 V) mA

CE

| Code | Electric supply | | |
|---|---|---|---|
| **6564**12 | 230 V AC | 1 | 10 |
| **6564**14 | 24 V AC/DC | 1 | 10 |



## 6564

Thermo-electric actuator **with low power consumption**.
**With opening position indicator.**
Normally closed.
Quick coupling installation, with a clip adapter.
For valves 338, 339, 401, 402, 425, 426, 421, 422, 455, 456, 220, 221, 222, 223, 224, 225, 226, 227, 230, 231, 232, 233, 234, 237, 676, 677, 678 series and manifolds 670, 671, 668. S1,664, 665 series.

Ambient temperature range: 0–50 °C
Protection class: IP 54
Supply cable length: 0,8 m
Starting current: ≤ 250 mA

CE

| Code | Electric supply | | |
|---|---|---|---|
| **6564**02 | 230 V AC | 1 | 10 |
| **6564**04 | 24 V AC/DC | 1 | 10 |

## Piston zone valves thermo-electric



### 632

Two-way piston zone valve.

Maximum working pressure: 10 bar
Medium temperature range: -5–95 °C
△p max.: 1 bar

| Code | Connection | Kv straight ($m^3/h$) | | |
|---|---|---|---|---|
| **632**400 | 1/2″ M | 5,10 | 1 | 5 |
| **632**500 | 3/4″ M | 6,27 | 1 | 5 |
| **632**600 | 1″ M | 6,38 | 1 | 5 |



### 633

Three-way piston zone valve.
3/4″ female third way.

Maximum working pressure: 10 bar
Medium temperature range: -5–95 °C
△p max.: 1 bar

| Code | Connection | Kv straight ($m^3/h$) | Kv by-pass ($m^3/h$) | | |
|---|---|---|---|---|---|
| **633**400 | 1/2″ M | 4,99 | 4,33 | 1 | 5 |
| **633**500 | 3/4″ M | 6,19 | 4,91 | 1 | 5 |
| **633**600 | 1″ M | 6,45 | 5,30 | 1 | 5 |



### 635

Balanced by-pass tee.
For zone valves 633 series.

Maximum working pressure: 10 bar
Medium temperature range: -5–95 °C
△p max.: 1 bar

| Code | Connection | Notes | Kv by-pass valve + tee ($m^3/h$) | | |
|---|---|---|---|---|---|
| **635**440 | 1/2″ M | nozzle: U4 | 0,96 | 1 | 5 |
| **635**460 | 1/2″ M | nozzle: U6 | 1,32 | 1 | 5 |
| **635**480 | 1/2″ M | nozzle: U8 | 1,73 | 1 | 5 |
| **635**540 | 3/4″ M | nozzle: U4 | 0,98 | 1 | 5 |
| **635**560 | 3/4″ M | nozzle: U6 | 1,36 | 1 | 5 |
| **635**580 | 3/4″ M | nozzle: U8 | 1,79 | 1 | 5 |
| **635**640 | 1″ M | nozzle: U4 | 1,02 | 1 | 5 |
| **635**660 | 1″ M | nozzle: U6 | 1,43 | 1 | 5 |
| **635**680 | 1″ M | nozzle: U8 | 1,88 | 1 | 5 |

**Wiring diagram for piston zone valves 632 and 633 series with thermo-electric actuator**

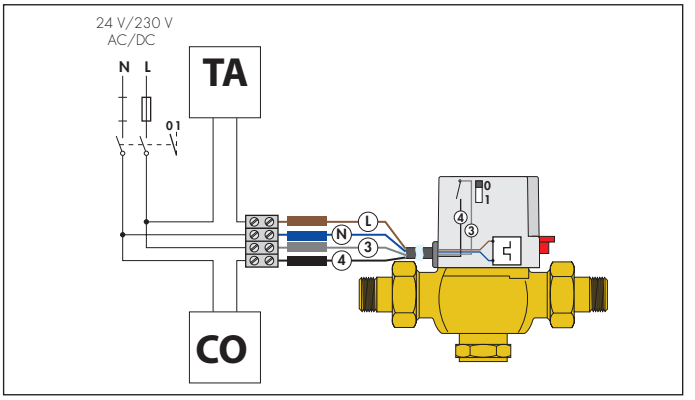




### 630

Thermo-electric actuator.
For zone valves 632 and 633 series.
Normally closed.

Protection class: IP 42
Ambient temperature range: 0–55 °C

| Code | Electric supply | Running power consumption (W) | Starting current (A) | | |
|---|---|---|---|---|---|
| **630**002 | 230 V AC/DC | 5 | ≤ 1 | 1 | 10 |



### 630

Thermo-electric actuator with manual actuator.
For zone valves 632 and 633 series.
Normally closed.
**With auxiliary microswitch**.

Protection class: IP 20
Auxiliary microswitch contact rating (230 V): 6 (3) A
Ambient temperature range: 0–55 °C

| Code | Electric supply | Starting current | Running power consumption (W) | | |
|---|---|---|---|---|---|
| **630**112 | 230 V AC/DC | ≤ 1 A | 5 | 1 | 10 |
| **630**114 | 24 V AC/DC | ≤ 350 mA | 3 | 1 | 10 |



Tailpiece, nut and seal.
For zone valves 632, 633 and 635 series

| Code | Article use | | |
|---|---|---|---|
| R69096 | 635440, 635460, 635480 | 1 | - |
| R69093 | 635540, 635560, 635580 | 1 | - |
| R69237 | 635640, 635660, 635680 | 1 | - |

## Motorised zone valves with spring return



### 642 Z-one

Motorised two-way zone valve.
Normally closed.
**With auxiliary microswitch**.

Maximum working pressure: 16 bar
Medium temperature range: 0–90 °C
Ambient temperature range: 0–40 °C
Protection class: IP 20
Auxiliary microswitch contact rating (230 V): 0,8 A
Supply cable length: 0,95 m
Operating time: 70–75 s (opening time), 5–7 s (closing time)

CE

| Code | Connection | Electric supply | Kv ($m^3/h$) | △p max. (bar) | | |
|---|---|---|---|---|---|---|
| **642**042 | 1/2"F | 230 V AC | 2,5 | 2,10 | 1 | 10 |
| **642**052 | 3/4"F | 230 V AC | 4,5 | 1,50 | 1 | 10 |
| **642**062 | 1"F | 230 V AC | 6 | 1,0 | 1 | 10 |
| **642**064 | 1"F | 24 V AC | 6 | 1,0 | 1 | 10 |



### 643 Z-one

Motorised three-way zone valve.
Normally closed.
**With auxiliary microswitch**.

Maximum working pressure: 16 bar
Medium temperature range: 0–90 °C
Ambient temperature range: 0–40 °C
Protection class: IP 20
Auxiliary microswitch contact rating (230 V): 0,8 A
Supply cable length: 0,95 m
Operating time: 5–7 s (closing time), 70–75 s (opening time)

CE

| Code | Connection | Electric supply | Kv ($m^3/h$) | △p max. (bar) | | |
|---|---|---|---|---|---|---|
| **643**042 | 1/2"F | 230 V AC | 2,5 | 2,10 | 1 | 10 |
| **643**052 | 3/4"F | 230 V AC | 4,5 | 1,50 | 1 | 10 |
| **643**062 | 1"F | 230 V AC | 6 | 1,0 | 1 | 10 |



### 641

Spare actuator for motorised zone valves 642 and 643 series.

Protection class: IP 65
Running power consumption: 7 VA
Operating time: 70–75 s (opening time), 5–7 s (closing time)

CE

| Code | Electric supply | | |
|---|---|---|---|
| **641**002 | 230 V AC | 1 | - |

**Installation**

The 3-way valve cannot be converted into 2-way valve and viceversa.

**2-way valve installed on the flow**

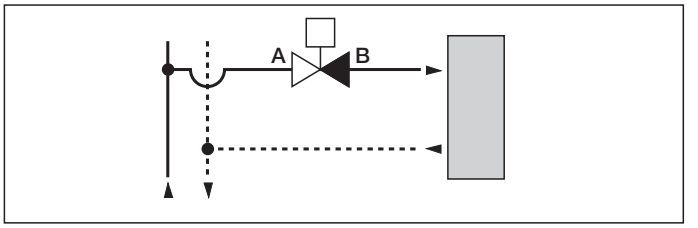


**2-way valve installed on the return**

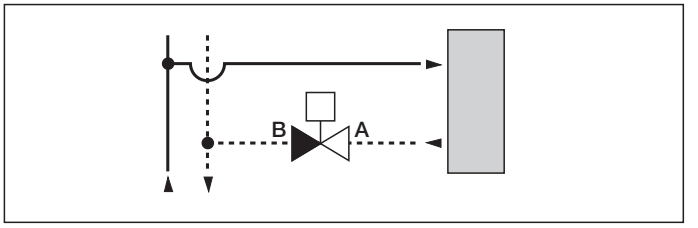


**3-way valve installed on the flow with diverting position and ON/OFF use mode**

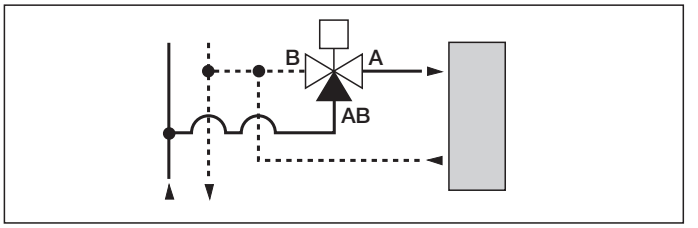


**3-way valve installed on the return with mixing position and ON/OFF use mode**

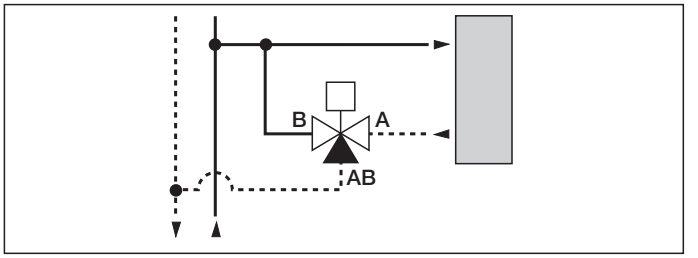


**Wiring diagram for spring return valves 642 and 643 series**

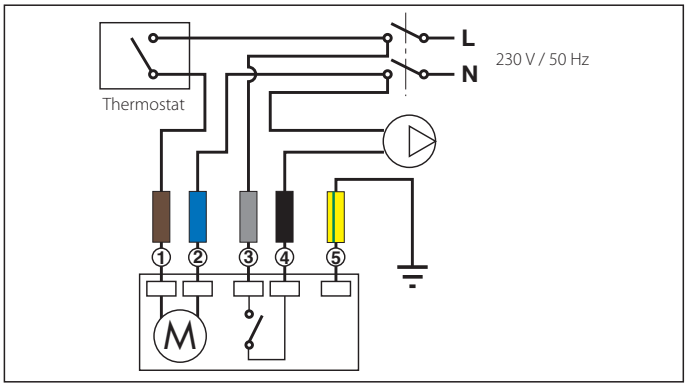

# DISTRIBUTION MANIFOLDS AND BOXES

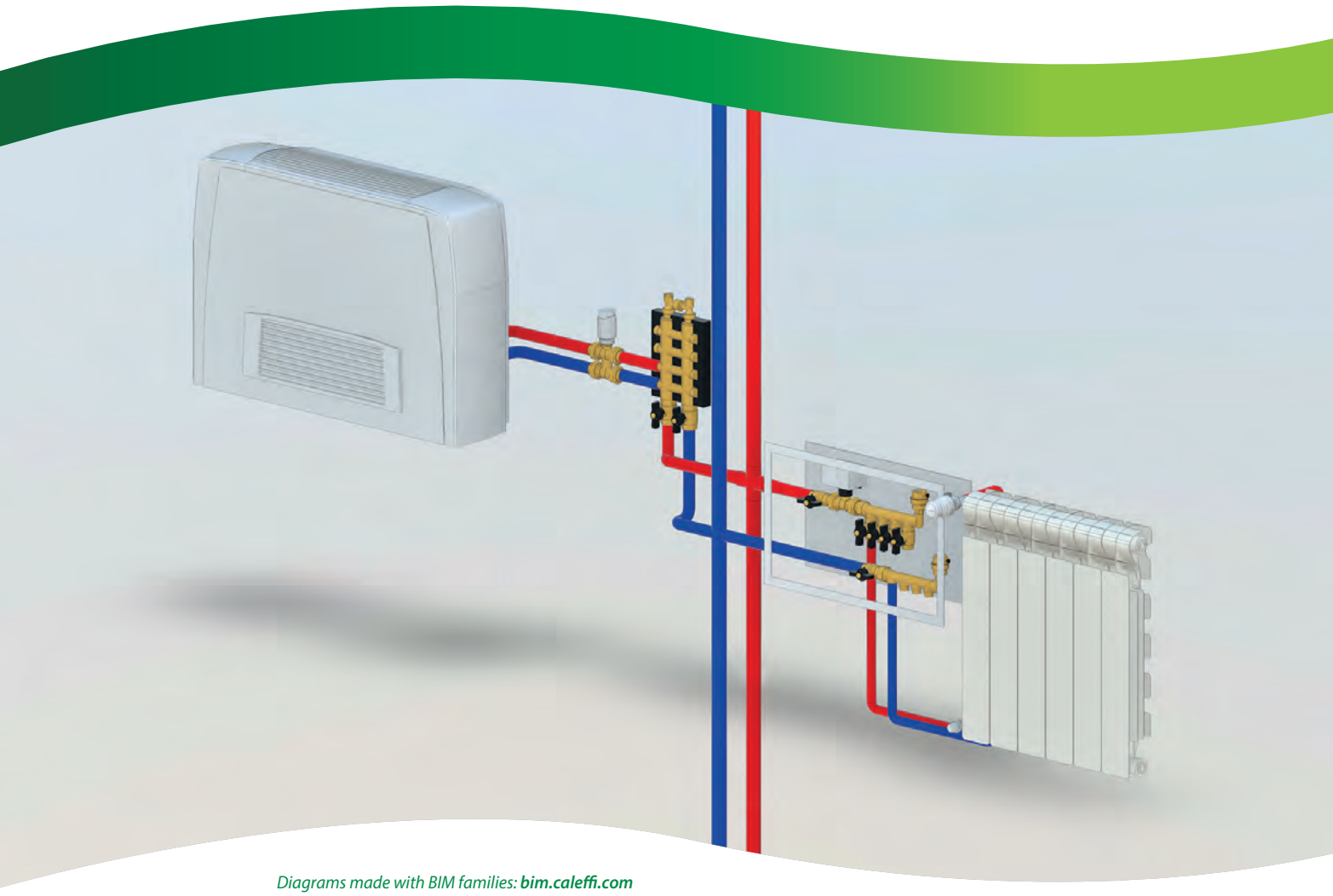

*Diagrams made with BIM families:* ***bim.caleffi.com***


**Single distribution manifolds - male outlet**
**Single distribution manifolds - female outlet**
**Blind single distribution manifolds**
**Single distribution manifolds with shut-off valves**
**Single distribution manifolds for air conditioning systems**
**Dual distribution manifolds**
**Accessories for dual distribution manifolds**
**Pre-assembled distribution manifolds with shut-off and pre-regulating valves - 1" connections**
**Single distribution manifolds with shut-off and pre-regulating valves - 1" connections**
**Accessories for manifolds - 1" connections**
**Pre-assembled distribution manifolds with shut-off and pre-regulating valves - 1 1/4" connections**
**Single distribution manifolds with shut-off and pre-regulating valves - 1 1/4" connections**
**Accessories for manifolds - 1 1/4" connections**
**Thermo-electric actuator (threaded connection)**
**Thermo-electric actuator (push fit connection)**
**Accessories**
**Fittings - threaded connections 23 p. 1.5**
**Fittings - 3/4" and 1" threaded connections**
**Plastic inspection wall box**
**Sheet steel inspection wall boxes**
**Brackets for inspection wall boxes**

# SINGLE DISTRIBUTION MANIFOLDS

## Single distribution manifolds - male outlet



### 349

Modular single distribution manifold. **Male outlet connection**, centre distance: 35 mm. For heating and cooling systems.

Maximum working pressure: 10 bar
Medium temperature range: -10–110 °C

| Code | Connection 1 | Connection 2 | Outlet connection | Outlet centre distance (mm) | | |
|---|---|---|---|---|---|---|
| **349**020 | 3/4″F | 3/4″M | 23 p.1,5 M - 2 out. | 35 | 5 | 50 |
| **349**030 | 3/4″F | 3/4″M | 23 p.1,5 M - 3 out. | 35 | 5 | 50 |
| **349**040 | 3/4″F | 3/4″M | 23 p.1,5 M - 4 out. | 35 | 5 | 50 |
| **349**050 | 3/4″F | 3/4″M | 23 p.1,5 M - 5 out. | 35 | 5 | 50 |



### 350

Modular single distribution manifold. **Male outlet connection**, centre distance: 50 mm. For heating and cooling systems.
Coupling with PTFE seal.
Note(*): without PTFE seal on coupling.

Maximum working pressure: 10 bar
Medium temperature range: -10–110 °C

| Code | Connection 1 | Connection 2 | Outlet connection | Outlet centre distance (mm) | Notes | | |
|---|---|---|---|---|---|---|---|
| **350**520 | 3/4″F | 3/4″M | 23 p.1,5 M - 2 out. | 50 | | 2 | - |
| **350**530 | 3/4″F | 3/4″M | 23 p.1,5 M - 3 out. | 50 | | 2 | - |
| **350**540 | 3/4″F | 3/4″M | 23 p.1,5 M - 4 out. | 50 | | 2 | - |
| **350**620 | 1″F | 1″M | 23 p.1,5 M - 2 out. | 50 | | 2 | - |
| **350**630 | 1″F | 1″M | 23 p.1,5 M - 3 out. | 50 | | 2 | - |
| **350**640 | 1″F | 1″M | 23 p.1,5 M - 4 out. | 50 | | 2 | - |
| **350**720 | 1 1/4″F | 1 1/4″M | 23 p.1,5 M - 2 out. | 60 | (*) | 2 | - |
| **350**730 | 1 1/4″F | 1 1/4″M | 23 p.1,5 M - 3 out. | 60 | (*) | 2 | - |
| **350**740 | 1 1/4″F | 1 1/4″M | 23 p.1,5 M - 4 out. | 60 | (*) | 2 | - |



### 349

Modular single distribution manifold. **Male outlet connections**, centre distance: 35 mm.
Outlet male connections.

Maximum working pressure: 10 bar
Medium temperature range: -10–110 °C

| Code | Connection 1 | Connection 2 | Outlet connection | Outlet centre distance (mm) | | |
|---|---|---|---|---|---|---|
| **349**130 | 3/4″F | 3/4″M | 1/2″M - 3 out. | 35 | 5 | 50 |
| **349**140 | 3/4″F | 3/4″M | 1/2″M - 4 out. | 35 | 5 | 50 |
| **349**150 | 3/4″F | 3/4″M | 1/2″M - 5 out. | 35 | 5 | 50 |



### 349

Modular single distribution manifold, **for press-fittings**. **Male outlet connections** with flat seat, centre distance: 35 mm.

Maximum working pressure: 10 bar
Medium temperature range: 10–110 °C

| Code | Connection 1 | Connection 2 | Outlet connection | Outlet centre distance (mm) | | |
|---|---|---|---|---|---|---|
| **349**230 | 3/4″F | 3/4″M | 1/2″M, Ø 13 - 3 out. | 35 | 5 | 50 |
| **349**240 | 3/4″F | 3/4″M | 1/2″M, Ø 13 - 4 out. | 35 | 5 | 50 |
| **349**250 | 3/4″F | 3/4″M | 1/2″M, Ø 13 - 5 out. | 35 | 5 | 50 |



### 592

Modular single distribution manifold.
**Male outlet connections**.
**PTFE seal on coupling**.
Note (*): without PTFE seal on coupling.

Maximum working pressure: 10 bar
Medium temperature range: -10–110 °C

| Code | Connection 1 | Connection 2 | Outlet connection | Outlet centre distance (mm) | Notes | | |
|---|---|---|---|---|---|---|---|
| **592**525 | 3/4″F | 3/4″M | 1/2″M - 2 out. | 50 | | 2 | - |
| **592**535 | 3/4″F | 3/4″M | 1/2″M - 3 out. | 50 | | 2 | - |
| **592**545 | 3/4″F | 3/4″M | 1/2″M - 4 out. | 50 | | 2 | - |
| **592**625 | 1″F | 1″M | 1/2″M - 2 out. | 50 | | 2 | - |
| **592**635 | 1″F | 1″M | 1/2″M - 3 out. | 50 | | 2 | - |
| **592**645 | 1″F | 1″M | 1/2″M - 4 out. | 50 | | 2 | - |
| **592**626 | 1″F | 1″M | 1/2″M - 2 out. | 60 | | 2 | - |
| **592**636 | 1″F | 1″M | 1/2″M - 3 out. | 60 | | 2 | - |
| **592**646 | 1″F | 1″M | 1/2″M - 4 out. | 60 | | 2 | - |
| **592**726 | 1 1/4″F | 1 1/4″M | 1/2″M - 2 out. | 60 | (*) | 2 | - |
| **592**736 | 1 1/4″F | 1 1/4″M | 1/2″M - 3 out. | 60 | (*) | 2 | - |
| **592**746 | 1 1/4″F | 1 1/4″M | 1/2″M - 4 out. | 60 | (*) | 2 | - |
| **592**622 | 1″F | 1″M | 3/4″M - 2 out. | 60 | | 2 | - |
| **592**632 | 1″F | 1″M | 3/4″M - 3 out. | 60 | | 2 | - |

## Single distribution manifolds - female outlet



### 349

Modular single distribution manifold. **Female outlet connections,** centre distance: 35 mm.

Maximum working pressure: 10 bar
Medium temperature range: -10–110 °C

| Code | Connection 1 | Connection 2 | Outlet connection | Outlet centre distance (mm) | | |
|---|---|---|---|---|---|---|
| **349**330 | 3/4" F | 3/4" M | 1/2" F - 3 out. | 35 | 5 | 50 |
| **349**340 | 3/4" F | 3/4" M | 1/2" F - 4 out. | 35 | 5 | 50 |
| **349**350 | 3/4" F | 3/4" M | 1/2" F - 5 out. | 35 | 5 | 50 |



### 592

Modular single distribution manifold. **Female outlet connections**, centre distance 50 mm.
**PTFE seal on coupling**.
Note (*): without PTFE seal on coupling.

Maximum working pressure: 10 bar
Medium temperature range: -10–110 °C

| Code | Connection 1 | Connection 2 | Outlet connection | Outlet centre distance (mm) | Notes | | |
|---|---|---|---|---|---|---|---|
| **592**527 | 3/4" F | 3/4" M | 1/2" F - 2 out. | 50 | | 2 | - |
| **592**537 | 3/4" F | 3/4" M | 1/2" F - 3 out. | 50 | | 2 | - |
| **592**547 | 3/4" F | 3/4" M | 1/2" F - 4 out. | 50 | | 2 | - |
| **592**627 | 1" F | 1" M | 1/2" F - 2 out. | 50 | | 2 | - |
| **592**637 | 1" F | 1" M | 1/2" F - 3 out. | 50 | | 2 | - |
| **592**647 | 1" F | 1" M | 1/2" F - 4 out. | 50 | | 2 | - |
| **592**628 | 1" F | 1" M | 1/2" F - 2 out. | 60 | | 2 | - |
| **592**638 | 1" F | 1" M | 1/2" F - 3 out. | 60 | | 2 | - |
| **592**648 | 1" F | 1" M | 1/2" F - 4 out. | 60 | | 2 | - |
| **592**728 | 1 1/4" F | 1 1/4" M | 1/2" F - 2 out. | 60 | (*) | 2 | - |
| **592**738 | 1 1/4" F | 1 1/4" M | 1/2" F - 3 out. | 60 | (*) | 2 | - |
| **592**748 | 1 1/4" F | 1 1/4" M | 1/2" F - 4 out. | 60 | (*) | 2 | - |

## Blind single distribution manifolds



### 351

Blind single distribution manifold. **Male outlet connections**.
Manifold for heating and cooling systems.

Maximum working pressure: 10 bar
Medium temperature range: -10–110 °C

| Code | Connection 1 | Outlet connection | Outlet centre distance (mm) | | |
|---|---|---|---|---|---|
| **351**520 | 3/4" F | 23 p.1,5 M - 2 out. | 50 | 2 | - |
| **351**530 | 3/4" F | 23 p.1,5 M - 3 out. | 50 | 2 | - |
| **351**540 | 3/4" F | 23 p.1,5 M - 4 out. | 50 | 2 | - |
| **351**620 | 1" F | 23 p.1,5 M - 2 out. | 50 | 2 | - |
| **351**630 | 1" F | 23 p.1,5 M - 3 out. | 50 | 2 | - |
| **351**640 | 1" F | 23 p.1,5 M - 4 out. | 50 | 2 | - |



### 598

Blind single distribution manifold. **Female outlet connections**, centre distance 50 mm.
For heating and cooling systems.

Maximum working pressure: 10 bar
Medium temperature range: -10–110 °C

| Code | Connection 1 | Outlet connection | Outlet centre distance (mm) | | |
|---|---|---|---|---|---|
| **598**522 | 3/4" F | 1/2" F - 2 out. | 50 | 2 | - |
| **598**532 | 3/4" F | 1/2" F - 3 out. | 50 | 2 | - |
| **598**542 | 3/4" F | 1/2" F - 4 out. | 50 | 2 | - |
| **598**622 | 1" F | 1/2" F - 2 out. | 50 | 2 | - |
| **598**632 | 1" F | 1/2" F - 3 out. | 50 | 2 | - |
| **598**642 | 1" F | 1/2" F - 4 out. | 50 | 2 | - |

## Single distribution manifolds with shut-off valves



### 354

Modular single distribution manifold with shut-off valves.

Maximum working pressure: 10 bar
Medium temperature range: 5–100 °C
Outlet centre distance: 35 mm
Material: dezincification resistant brass DR

| Code | Connection 1 | Connection 2 | Outlet connection | | |
|---|---|---|---|---|---|
| **354**052 | 3/4" F | 3/4" M | 23 p.1,5 M - 2 out. | 5 | 20 |
| **354**053 | 3/4" F | 3/4" M | 23 p.1,5 M - 3 out. | 5 | 20 |
| **354**054 | 3/4" F | 3/4" M | 23 p.1,5 M - 4 out. | 5 | 20 |
| **354**055 | 3/4" F | 3/4" M | 23 p.1,5 M - 5 out. | 5 | 20 |



### 354

Modular single distribution manifold with shut-off valves. **Female flat seat connection**.
**For press-fittings**.

Maximum working pressure: 10 bar
Medium temperature range: 5–100 °C
Outlet centre distance: 35 mm
Material: brass

| Code | Connection 1 | Connection 2 | Outlet connection | | |
|---|---|---|---|---|---|
| **354**252 | 3/4" F | 3/4" M | 1/2" M, Ø 13 - 2 out. | 2 | 30 |
| **354**253 | 3/4" F | 3/4" M | 1/2" M, Ø 13 - 3 out. | 2 | 20 |
| **354**254 | 3/4" F | 3/4" M | 1/2" M, Ø 13 - 4 out. | 2 | 10 |
| **354**255 | 3/4" F | 3/4" M | 1/2" M, Ø 13 - 5 out. | 2 | 10 |

## Single distribution manifolds for air conditioning systems



### 650

Modular single distribution manifold. **Male outlet connections**, centre distance 60 mm.
For air-conditioning systems.
**With insulation**.

Maximum working pressure: 10 bar
Medium temperature range: -40–95 °C

| Code | Connection 1 | Connection 2 | Outlet connection | Outlet centre distance (mm) | | |
|---|---|---|---|---|---|---|
| **650**622 | 1" F | 1" M | 3/4" M - 2 out. | 60 | 2 | - |
| **650**632 | 1" F | 1" M | 3/4" M - 3 out. | 60 | 2 | - |
| **650**722 | 1 1/4" F | 1 1/4" M | 3/4" M - 2 out. | 60 | 2 | - |
| **650**732 | 1 1/4" F | 1 1/4" M | 3/4" M - 3 out. | 60 | 2 | - |
| **650**742 | 1 1/4" F | 1 1/4" M | 3/4" M - 4 out. | 60 | 2 | - |

# DUAL DISTRIBUTION MANIFOLDS

## Dual distribution manifolds



### 356

Cast monoblock dual distribution manifold.
For heating and cooling systems.

Maximum working pressure: 10 bar
Medium temperature range: -10–110 °C
Outlet centre distance: 40 mm

| Code | Connection | Outlet connection | | |
|---|---|---|---|---|
| **356**502 | 3/4" F | 23 p.1,5 M - 2 out. | 1 | 5 |
| **356**504 | 3/4" F | 23 p.1,5 M - 4 out. | 1 | 5 |
| **356**506 | 3/4" F | 23 p.1,5 M - 6 out. | 1 | 5 |
| **356**508 | 3/4" F | 23 p.1,5 M - 8 out. | 1 | 5 |
| **356**510 | 3/4" F | 23 p.1,5 M - 10 out. | 1 | 5 |
| **356**604 | 1" F | 23 p.1,5 M - 4 out. | 1 | 5 |
| **356**606 | 1" F | 23 p.1,5 M - 6 out. | 1 | 5 |
| **356**608 | 1" F | 23 p.1,5 M - 8 out. | 1 | 5 |
| **356**610 | 1" F | 23 p.1,5 M - 10 out. | 1 | 5 |
| **356**612 | 1" F | 23 p.1,5 M - 12 out. | 1 | - |



### 356

Cast monoblock dual distribution manifold.
For heating and cooling systems.
**With insulation**.

Maximum working pressure: 10 bar
Medium temperature range: 0–100 °C
Outlet centre distance: 40 mm

| Code | Connection | Outlet connection | | |
|---|---|---|---|---|
| **356**604 IS | 1" F | 23 p.1,5 M - 4 out. | 1 | 10 |
| **356**606 IS | 1" F | 23 p.1,5 M - 6 out. | 1 | 10 |
| **356**608 IS | 1" F | 23 p.1,5 M - 8 out. | 1 | 5 |
| **356**610 IS | 1" F | 23 p.1,5 M - 10 out. | 1 | 5 |



### 357

Single sided cast monoblock dual distribution manifold.
Manifold for heating and cooling systems.

Maximum working pressure: 10 bar
Medium temperature range: -10–110 °C
Outlet centre distance: 40 mm

| Code | Connection | Outlet connection | | |
|---|---|---|---|---|
| **357**502 | 3/4" F | 23 p.1,5 M - 2 out. | 1 | 10 |
| **357**503 | 3/4" F | 23 p.1,5 M - 3 out. | 1 | 10 |
| **357**504 | 3/4" F | 23 p.1,5 M - 4 out. | 1 | 5 |
| **357**505 | 3/4" F | 23 p.1,5 M - 5 out. | 1 | - |
| **357**506 | 3/4" F | 23 p.1,5 M - 6 out. | 1 | - |

## Accessories for dual distribution manifolds



### 356

Differential by-pass for dual distribution manifolds 356 and 357 series.
3/8" connection for automatic air vent.

Maximum working pressure: 10 bar
Medium temperature range: -10–110 °C
Differential pressure fixed setting: 20 (2000 mm c.a.) kPa

| Code | Connection | | |
|---|---|---|---|
| **356**050 | 3/4" M | 1 | 20 |

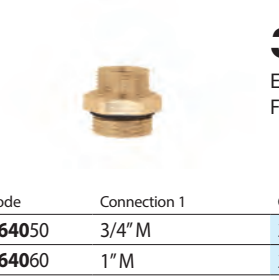

### 3640

End fitting.
For distribution manifolds 356 and 357 series.

| Code | Connection 1 | Connection 2 | | |
|---|---|---|---|---|
| **3640**50 | 3/4" M | 23 p.1,5 M | 2 | - |
| **3640**60 | 1" M | 23 p.1,5 M | 2 | - |

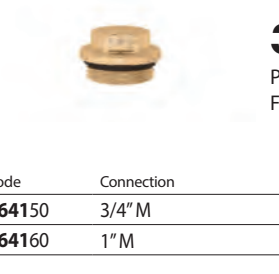

### 3641

Plug.
For distribution manifolds 356 and 357 series.

| Code | Connection | | |
|---|---|---|---|
| **3641**50 | 3/4" M | 2 | - |
| **3641**60 | 1" M | 2 | - |

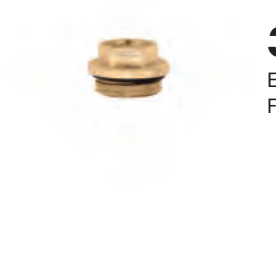

### 3642

End fitting for air vent connection.
For distribution manifolds 356 and 357 series.

| Code | Connection 1 | Connection 2 | | |
|---|---|---|---|---|
| **3642**53 | 3/4" M | 3/8" F | 2 | - |
| **3642**54 | 3/4" M | 1/2" F | 2 | - |
| **3642**63 | 1" M | 3/8" F | 2 | - |

# DISTRIBUTION MANIFOLDS WITH SHUT-OFF AND PRE-REGULATING VALVES

## Pre-assembled distribution manifolds with shut-off and pre-regulating valves - 1" connections

### 662

Distribution manifold group.
Complete with:
- return manifold complete with shut-off valves fitted for thermo-electric actuator;
- flow manifold complete with lockshield valves for flow rate pre-regulation;
- end fittings consisting of double radial end fitting, manual air vent and plugs;
- steel mounting brackets for use with box 659, 661 series or for direct wall fixing.

Maximum working pressure: 10 bar
Medium temperature range: 5–100 °C
Outlet centre distance: 50 mm

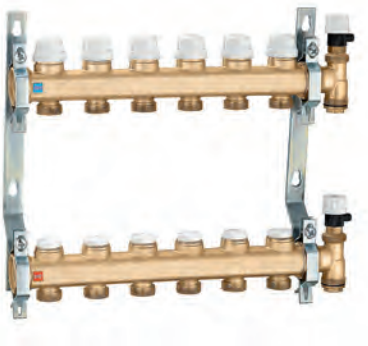

| Code | Connection | Outlet connection | | |
|---|---|---|---|---|
| **662**6B5 | 1"F | 3/4" M - 2 out. | 1 | - |
| **662**6C5 | 1"F | 3/4" M - 3 out. | 1 | - |
| **662**6D5 | 1"F | 3/4" M - 4 out. | 1 | - |
| **662**6E5 | 1"F | 3/4" M - 5 out. | 1 | - |
| **662**6F5 | 1"F | 3/4" M - 6 out. | 1 | - |
| **662**6G5 | 1"F | 3/4" M - 7 out. | 1 | - |
| **662**6H5 | 1"F | 3/4" M - 8 out. | 1 | - |
| **662**6I5 | 1"F | 3/4" M - 9 out. | 1 | - |
| **662**6L5 | 1"F | 3/4" M - 10 out. | 1 | - |
| **662**6M5 | 1"F | 3/4" M - 11 out. | 1 | - |
| **662**6N5 | 1"F | 3/4" M - 12 out. | 1 | - |
| **662**6O5 | 1"F | 3/4" M - 13 out. | 1 | - |



### 664

Insulation for distribution manifolds 662, 664 and 665 series.
For heating and cooling systems.
For use with box code 659..4 (adjustable depth from 110 to 140 mm).

| Code | Notes | | |
|---|---|---|---|
| CBN6646F1 | for manifolds with 2 to 6 outlets | 35 | - |
| CBN6646N1 | for manifolds with 7 to 12 outlets | 20 | - |
| CBN6646O1 | for manifolds with 13 outlets | 1 | - |

## Single distribution manifolds with shut-off and pre-regulating valves - 1" connections



### 662

Pair of distribution manifolds.
Complete with shut-off and lockshield valves for flow rate pre-regulation.

Maximum working pressure: 10 bar
Medium temperature range: 5–100 °C
Outlet centre distance: 50 mm

| Code | Connection 1 | Connection 2 | Outlet connection | | |
|---|---|---|---|---|---|
| **662**625 | 1"F | 1"M | 3/4"M - 2 out. | 1 | 10 |
| **662**635 | 1"F | 1"M | 3/4"M - 3 out. | 1 | 10 |
| **662**645 | 1"F | 1"M | 3/4"M - 4 out. | 1 | 5 |
| **662**655 | 1"F | 1"M | 3/4"M - 5 out. | 1 | 5 |
| **662**665 | 1"F | 1"M | 3/4"M - 6 out. | 1 | 5 |



### 6621

Flow distribution manifold.
Complete with lockshield valves for flow rate pre-regulation.

Maximum working pressure: 10 bar
Medium temperature range: 5–100 °C
Outlet centre distance: 50 mm

| Code | Connection 1 | Connection 2 | Outlet connection | | |
|---|---|---|---|---|---|
| **6621**25 | 1"F | 1"M | 3/4"M - 2 out. | 2 | - |
| **6621**35 | 1"F | 1"M | 3/4"M - 3 out. | 2 | - |
| **6621**45 | 1"F | 1"M | 3/4"M - 4 out. | 2 | - |
| **6621**55 | 1"F | 1"M | 3/4"M - 5 out. | 2 | - |
| **6621**65 | 1"F | 1"M | 3/4"M - 6 out. | 2 | - |



### 6620

Return manifold.
Complete with shut-off valves, fitted for thermo-electric actuator.

Maximum working pressure: 10 bar
Medium temperature range: 5–100 °C
Outlet centre distance: 50 mm

| Code | Connection 1 | Connection 2 | Outlet connection | | |
|---|---|---|---|---|---|
| **6620**25 | 1"F | 1"M | 3/4"M - 2 out. | 2 | - |
| **6620**35 | 1"F | 1"M | 3/4"M - 3 out. | 2 | - |
| **6620**45 | 1"F | 1"M | 3/4"M - 4 out. | 2 | - |
| **6620**55 | 1"F | 1"M | 3/4"M - 5 out. | 2 | - |
| **6620**65 | 1"F | 1"M | 3/4"M - 6 out. | 2 | - |

## Accessories for manifolds - 1" connections



### 391

Pair of ball shut-off valves with O-Ring seal.
For distribution manifolds 664 and 665 series.

Maximum working pressure: 10 bar
Medium temperature range: 5–100 °C

| Code | Pipe connection | Manifold connection | | |
|---|---|---|---|---|
| **391**066 | 1"F | 1"M | 1 | 10 |



### 5996

End fitting consisting of double radial end fitting, air vent cock and plug.

Maximum working pressure: 10 bar
Medium temperature range: 5–100 °C

| Code | Manifold connection | | |
|---|---|---|---|
| **599**662 | 1"F | 1 | 25 |



### 662

Fixed setting differential by-pass kit 20 kPa (2000 mm w.g.), with flexible hose.
For distribution manifolds 662 series.

Maximum working pressure: 10 bar
Medium temperature range: 0–100 °C

| Code | Connection 1 | Connection 2 | | |
|---|---|---|---|---|
| **662**000 | 3/4" F captive nut | 3/4"F | 1 | 5 |



### 658

Pair of steel mounting brackets for distribution manifolds 662 and 664 series.
To be used with boxes code 659..5 or directly wall mounted.

| Code | | |
|---|---|---|
| **658**101 | 1 | 20 |



### 658

Polymer mounting brackets with adjustable centre distance, for distribution manifolds 662 and 664 series.
To be used with boxes code 659.4 (depth 110–140 mm), or directly wall mounted.
Complete with screws and wall anchors.

| Code | | |
|---|---|---|
| **658**400 | 1 | 5 |

# Pre-assembled distribution manifolds with shut-off and pre-regulating valves - 1 1/4" connections

## 663

Pre-assembled distribution manifold.
Consisting of:
- 1 return distribution manifold complete with shut-off valves fitted for thermo-electric actuator;
- 1 flow distribution manifold complete with lockshield valves for flow rate pre-regulation;
- 2 mounting brackets code 658100;
- 2 reduction fittings 1 1/4" M x 1" F code 364276;
- 2 double radial end fittings with plugs.

Maximum working pressure: 10 bar
Medium temperature range: 5–100 °C
Outlet centre distance: 50 mm

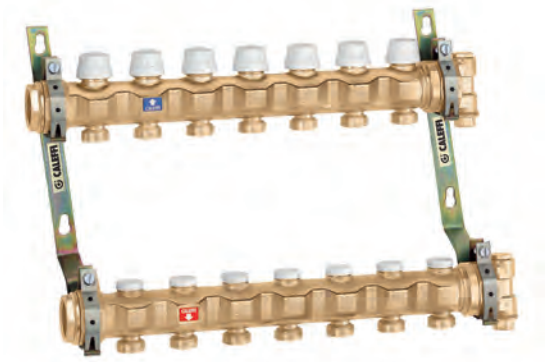

| Code | Connection | Outlet connection | | |
|---|---|---|---|---|
| **663**7C5 | 1 1/4" F | 3/4" M - 3 out. | 1 | - |
| **663**7D5 | 1 1/4" F | 3/4" M - 4 out. | 1 | - |
| **663**7E5 | 1 1/4" F | 3/4" M - 5 out. | 1 | - |
| **663**7F5 | 1 1/4" F | 3/4" M - 6 out. | 1 | - |
| **663**7G5 | 1 1/4" F | 3/4" M - 7 out. | 1 | - |
| **663**7H5 | 1 1/4" F | 3/4" M - 8 out. | 1 | - |
| **663**7I5 | 1 1/4" F | 3/4" M - 9 out. | 1 | - |
| **663**7L5 | 1 1/4" F | 3/4" M - 10 out. | 1 | - |
| **663**7M5 | 1 1/4" F | 3/4" M - 11 out. | 1 | - |
| **663**7N5 | 1 1/4" F | 3/4" M - 12 out. | 1 | - |
| **663**7O5 | 1 1/4" F | 3/4" M - 13 out. | 1 | - |

## 663

Pre-assembled distribution manifold complete with insulation, for cooling systems.
Complete with:
- 1 return distribution manifold complete with shut-off valves fitted for thermo-electric actuator;
- 1 flow distribution manifold complete with lockshield valve for flow rate pre-regulation;
- 2 mounting brackets code 658100;
- 2 reduction fittings 1 1/4" M x 1" F code 364276;
- 2 double radial end fittings with plugs.

**With insulation**.

Maximum working pressure: 10 bar
Medium temperature range: 5–100 °C
Outlet centre distance: 50 mm



| Code | Connection | Outlet connection | | |
|---|---|---|---|---|
| **663**7C5 IS | 1 1/4" F | 3/4" M - 3 out. | 1 | - |
| **663**7D5 IS | 1 1/4" F | 3/4" M - 4 out. | 1 | - |
| **663**7E5 IS | 1 1/4" F | 3/4" M - 5 out. | 1 | - |
| **663**7F5 IS | 1 1/4" F | 3/4" M - 6 out. | 1 | - |
| **663**7G5 IS | 1 1/4" F | 3/4" M - 7 out. | 1 | - |
| **663**7H5 IS | 1 1/4" F | 3/4" M - 8 out. | 1 | - |
| **663**7I5 IS | 1 1/4" F | 3/4" M - 9 out. | 1 | - |
| **663**7L5 IS | 1 1/4" F | 3/4" M - 10 out. | 1 | - |
| **663**7M5 IS | 1 1/4" F | 3/4" M - 11 out. | 1 | - |
| **663**7N5 IS | 1 1/4" F | 3/4" M - 12 out. | 1 | - |
| **663**7O5 IS | 1 1/4" F | 3/4" M - 13 out. | 1 | - |

## Single distribution manifolds with shut-off and pre-regulating valves - 1 1/4" connections



### 663

Pair of distribution manifolds.
Complete with shut-off and lockshield valves for flow rate pre-regulation.

Maximum working pressure: 10 bar
Medium temperature range: 5–100 °C
Outlet centre distance: 50 mm

| Code | Connection 1 | Connection 2 | Outlet connection | | |
|---|---|---|---|---|---|
| **663**735 | 1 1/4" F | 1 1/4" M | 3/4" M - 3 out. | 1 | - |
| **663**745 | 1 1/4" F | 1 1/4" M | 3/4" M - 4 out. | 1 | - |
| **663**755 | 1 1/4" F | 1 1/4" M | 3/4" M - 5 out. | 1 | - |
| **663**765 | 1 1/4" F | 1 1/4" M | 3/4" M - 6 out. | 1 | - |
| **663**775 | 1 1/4" F | 1 1/4" M | 3/4" M - 7 out. | 1 | - |
| **663**785 | 1 1/4" F | 1 1/4" M | 3/4" M - 8 out. | 1 | - |



### 6631

Flow distribution manifold.
Complete with lockshield valve for flow rate pre-regulation.

Maximum working pressure: 10 bar
Medium temperature range: 5–100 °C
Outlet centre distance: 50 mm

| Code | Connection 1 | Connection 2 | Outlet connection | | |
|---|---|---|---|---|---|
| **6631**30 | 1 1/4" F | 1 1/4" M | 3/4" M - 3 out. | 2 | - |
| **6631**40 | 1 1/4" F | 1 1/4" M | 3/4" M - 4 out. | 2 | - |
| **6631**50 | 1 1/4" F | 1 1/4" M | 3/4" M - 5 out. | 2 | - |
| **6631**60 | 1 1/4" F | 1 1/4" M | 3/4" M - 6 out. | 2 | - |
| **6631**70 | 1 1/4" F | 1 1/4" M | 3/4" M - 7 out. | 2 | - |
| **6631**80 | 1 1/4" F | 1 1/4" M | 3/4" M - 8 out. | 2 | - |



### 6630

Return distribution manifold.
Complete with shut-off valves, fitted for thermo-electric actuator.

Maximum working pressure: 10 bar
Medium temperature range: 5–100 °C
Outlet centre distance: 50 mm

| Code | Connection 1 | Connection 2 | Outlet connection | | |
|---|---|---|---|---|---|
| **6630**30 | 1 1/4" F | 1 1/4" M | 3/4" M - 3 out. | 2 | - |
| **6630**40 | 1 1/4" F | 1 1/4" M | 3/4" M - 4 out. | 2 | - |
| **6630**50 | 1 1/4" F | 1 1/4" M | 3/4" M - 5 out. | 2 | - |
| **6630**60 | 1 1/4" F | 1 1/4" M | 3/4" M - 6 out. | 2 | - |
| **6630**70 | 1 1/4" F | 1 1/4" M | 3/4" M - 7 out. | 2 | - |
| **6630**80 | 1 1/4" F | 1 1/4" M | 3/4" M - 8 out. | 2 | - |

## Accessories for manifolds - 1 1/4" connections



### 663

Off-centre by-pass kit with fixed setting 20 kPa (2000 mm w.g.).
For pre-assembled distribution manifolds 663 series.

Maximum working pressure: 10 bar
Medium temperature range: -10–110 °C

| Code | Connection 1 | Connection 2 | | |
|---|---|---|---|---|
| **663**000 | 1/2" M | 3/8" M | 1 | 20 |



### 663

Insulation (front and back) for couple manifolds 663 series.

| Code | Notes | Article use | | |
|---|---|---|---|---|
| F69466 | for manifolds with 3 outlets | 6637C5 | 1 | - |
| F69467 | for manifolds with 4 outlets | 6637D5 | 1 | - |
| F69468 | for manifolds with 5 outlets | 6637E5 | 1 | - |
| F69469 | for manifolds with 6 outlets | 6637F5 | 1 | - |
| F69470 | for manifolds with 7 outlets | 6637G5 | 1 | - |
| F69471 | for manifolds with 8 outlets | 6637H5 | 1 | - |
| F69472 | for manifolds with 9 outlets | 6637I5 | 1 | - |
| F69473 | for manifolds with 10 outlets | 6637L5 | 1 | - |
| F69474 | for manifolds with 11 outlets | 6637M5 | 1 | - |
| F69475 | for manifolds with 12 outlets | 6637N5 | 1 | - |
| F69476 | for manifolds with 13 outlets | 6637O5 | 1 | - |



### 391

Pair of ball valves.
Female-male connections with union.
With temperature gauge, scale: 0–80 °C, Ø 40 mm.

Maximum working pressure: 10 bar
Medium temperature range: 0–100 °C

| Code | Connection 1 | Connection 2 | | |
|---|---|---|---|---|
| **391**167 | 1" F | 1 1/4" M | 1 | 5 |
| **391**177 | 1 1/4" F | 1 1/4" M | 1 | 5 |



### 391

Pair of ball valves.
Female-male connections with union.
With temperature gauge connection.

Maximum working pressure: 10 bar
Medium temperature range: 0–100 °C

| Code | Connection 1 | Connection 2 | | |
|---|---|---|---|---|
| **391**067 | 1" F | 1 1/4" M | 1 | - |
| **391**077 | 1 1/4" F | 1 1/4" M | 1 | - |

# THERMO-ELECTRIC ACTUATORS

## Thermo-electric actuator (threaded connection)



### 6561

Thermo-electric actuator with auxiliary microswitch.
Normally closed.
For valves 338, 339, 401, 402, 425, 426, 421, 422, 455, 456, 220, 221, 222, 223, 224, 225, 226, 227, 230, 231, 232, 233, 234, 237, 676, 677, 678 series and manifolds 670, 671, 668. S1,664, 665 series.
**With auxiliary microswitch**.

Ambient temperature range: 0–50 °C
Protection class: IP 44 (vertical position)
Supply cable length: 0,8 m
Auxiliary microswitch contact rating (230 V): 0,8 A
Starting current: ≤ 1 A

CE

| Code | Electric supply | | |
|---|---|---|---|
| **6561**12 | 230 V AC | 1 | 10 |
| **6561**14 | 24 V AC/DC | 1 | 10 |



### 6561

Thermo-electric actuator.
Normally closed.
For valves 338, 339, 401, 402, 425, 426, 421, 422, 230, 231, 232, 233, 234, 237, 220, 221, 222, 223, 224, 225, 226, 227, 455 and 456 series.

Ambient temperature range: 0–50 °C
Protection class: IP 44 (vertical position)
Supply cable length: 0,8 m
Starting current: ≤ 1 A

CE

| Code | Electric supply | | |
|---|---|---|---|
| **6561**02 | 230 V AC | 1 | 10 |
| **6561**04 | 24 V AC/DC | 1 | 10 |



### 6563

Thermo-electric actuator **with manual opening and position indicator**.
Normally closed.
For valves 338, 339, 401, 402, 425, 426, 421, 422, 455, 456, 220, 221, 222, 223, 224, 225, 226, 227, 230, 231, 232, 233, 234, 237, 676, 677, 678 series and distribution manifolds 670, 671, 678.S1, 664 and 665 series.
**With auxiliary microswitch**.
PATENT

Ambient temperature range: 0–50 °C
Protection class: IP 40
Supply cable length: 0,8 m
Auxiliary microswitch contact rating (230 V): 0,8 A
Starting current: ≤ 1 A

CE

| Code | Electric supply | | |
|---|---|---|---|
| **6563**12 | 230 V AC | 1 | 10 |
| **6563**14 | 24 V AC/DC | 1 | 10 |



### 6563

Thermo-electric actuator **with manual opening and position indicator**.
Normally closed.
For valves 338, 339, 401, 402, 425, 426, 421, 422, 455, 456, 220, 221, 222, 223, 224, 225, 226, 227, 230, 231, 232, 233, 234, 237, 676, 677, 678 series and distribution manifolds 670, 671, 678.S1, 664 and 665 series.
PATENT

Ambient temperature range: 0–50 °C
Protection class: IP 40
Supply cable length: 0,8 m
Starting current: ≤ 1 A

CE

| Code | Electric supply | | |
|---|---|---|---|
| **6563**02 | 230 V AC | 1 | 10 |
| **6563**04 | 24 V AC/DC | 1 | 10 |



### 6563

Thermo-electric actuator **with low power consumption, with auxiliary microswitch**.
**With opening position indicator**.
Normally closed.
**With auxiliary microswitch**.
PATENT

Ambient temperature range: 0–50 °C
Running power consumption: 3 W
Protection class: IP 40
Supply cable length: 0,8 m
Starting current: ≤ 250 mA

CE

| Code | Notes | Electric supply | | |
|---|---|---|---|---|
| **6563**54 | - | 24 V AC/DC | 1 | 10 |
| **6563**44 | without auxiliary microswitch | 24 V AC/DC | 1 | 10 |

# Thermo-electric actuator (push fit connection)



## 6562

Thermo-electric actuator **with opening position indicator**.
Normally closed.
Quick coupling installation, with a clip adapter.
For valves 338, 339, 401, 402, 425, 426, 421, 422, 455, 456, 220, 221, 222, 223, 224, 225, 226, 227, 230, 231, 232, 233, 234, 237, 676, 677, 678 series and manifolds 670, 671, 668.S1,664, 665 series.
**With auxiliary microswitch**.

Ambient temperature range: 0–50 °C
Protection class: IP 54
Supply cable length: 0,8 m
Auxiliary microswitch contact rating (230 V): 0,8 A
Starting current: ≤ 1 A

CE

| Code | Electric supply | | |
|---|---|---|---|
| **6562**12 | 230 V AC | 1 | 10 |
| **6562**14 | 24 V AC/DC | 1 | 10 |



## 6562

Thermo-electric actuator.
**With opening position indicator**.
Normally closed.
Quick coupling installation, with a clip adapter.
For valves 338, 339, 401, 402, 425, 426, 421, 422, 455, 456, 220, 221, 222, 223, 224, 225, 226, 227, 230, 231, 232, 233, 234, 237, 676, 677, 678 series and manifolds 670, 671, 668.S1,664, 665 series.

Ambient temperature range: 0–50 °C
Protection class: IP 54
Supply cable length: 0,8 m
Starting current: ≤ 1 A

CE

| Code | Electric supply | | |
|---|---|---|---|
| **6562**02 | 230 V AC | 1 | 10 |
| **6562**04 | 24 V AC/DC | 1 | 10 |



## 6564

Thermo-electric actuator **with low power consumption,** with auxiliary microswitch.
**With opening position indicator**.
Normally closed.
Quick coupling installation, with a clip adapter.
For valves 338, 339, 401, 402, 425, 426, 421, 422, 455, 456, 220, 221, 222, 223, 224, 225, 226, 227, 230, 231, 232, 233, 234, 237, 676, 677, 678 series and manifolds 670, 671, 668.S1,664, 665 series.
**With auxiliary microswitch**.

Ambient temperature range: 0–50 °C
Protection class: IP 54
Supply cable length: 0,8 m
Auxiliary microswitch contact rating (230 V): 0,8 A
Starting current: ≤ 250 (230 V) mA

CE

| Code | Electric supply | | |
|---|---|---|---|
| **6564**12 | 230 V AC | 1 | 10 |
| **6564**14 | 24 V AC/DC | 1 | 10 |



## 6564

Thermo-electric actuator **with low power consumption**.
**With opening position indicator.**
Normally closed.
Quick coupling installation, with a clip adapter.
For valves 338, 339, 401, 402, 425, 426, 421, 422, 455, 456, 220, 221, 222, 223, 224, 225, 226, 227, 230, 231, 232, 233, 234, 237, 676, 677, 678 series and manifolds 670, 671, 668.S1,664, 665 series.

Ambient temperature range: 0–50 °C
Protection class: IP 54
Supply cable length: 0,8 m
Starting current: ≤ 250 mA

CE

| Code | Electric supply | | |
|---|---|---|---|
| **6564**02 | 230 V AC | 1 | 10 |
| **6564**04 | 24 V AC/DC | 1 | 10 |

# ACCESSORIES

## Accessories



### 385

Shut-off ball cook, for distribution manifold outlets.
With handle.

Maximum working pressure: 10 bar
Medium temperature range: 5–100 °C

| Code | Connection 1 | Connection 2 | | |
|---|---|---|---|---|
| **385**000 | 23 p.1,5 M | 23 p.1,5 F captive nut | 10 | - |



### 385

Shut-off ball cook, for distribution manifold outlets.
Without handle.

Maximum working pressure: 10 bar
Medium temperature range: 5–100 °C

| Code | Connection 1 | Connection 2 | | |
|---|---|---|---|---|
| **385**010 | 23 p.1,5 M | 23 p.1,5 F captive nut | 15 | 150 |



### 386

Screw plug with nut, for distribution manifold outlets.

| Code | Connection | | |
|---|---|---|---|
| **386**000 | 23 p. 1,5 | 1 | 10 |



### 383

Female fitting - olive coupling.

| Code | Connection 1 | Connection 2 | | |
|---|---|---|---|---|
| **383**030 | 3/8" F | 23 p.1,5 M | 10 | - |
| **383**040 | 1/2" F | 23 p.1,5 M | 10 | - |
| **383**050 | 3/4" F | 23 p.1,5 M | 10 | - |
| **383**140 | 23 p.1,5 F | 1/2" M | 10 | - |
| **383**150 | 23 p.1,5 F | 3/4" M | 10 | - |



### 383

Female fitting - olive coupling.

Finish: chrome plated

| Code | Connection 1 | Connection 2 | | |
|---|---|---|---|---|
| **383**151 | 23 p.1,5 F | 3/4" M | 10 | - |



### 383

Connection fitting with O-ring seal.
For use with 3/4" 347, 679 and 680 series.

| Code | Connection 1 | Connection 2 | | |
|---|---|---|---|---|
| **383**550 | 3/4" M | 23 p.1,5 F | 10 | 100 |



### 383

Female-female fitting.

| Code | Connection 1 | Connection 2 | | |
|---|---|---|---|---|
| **383**240 | 23 p.1,5 F | 1/2" F | 10 | - |



### 384

Male fitting - olive coupling.

| Code | Connection 1 | Connection 2 | | |
|---|---|---|---|---|
| **384**030 | 3/8" M | 23 p.1,5 M | 10 | - |
| **384**040 | 1/2" M | 23 p.1,5 M | 10 | - |
| **384**050 | 3/4" M | 23 p.1,5 M | 10 | - |



### 384

Male fitting - olive coupling.

Finish: chrome plated

| Code | Connection 1 | Connection 2 | | |
|---|---|---|---|---|
| **384**031 | 3/8" M | 23 p.1,5 M | 10 | - |
| **384**041 | 1/2" M | 23 p.1,5 M | 10 | - |



### 382

Fitting with 23 p.1,5 captive nut.

Maximum working pressure: 10 bar
Medium temperature range: 5–100 °C
Finish: chrome plated

| Code | Connection 1 | Connection 2 | | |
|---|---|---|---|---|
| **382**000 | 23 p.1,5 M | 23 p.1,5 F captive nut | 10 | - |



## 383

Adapter with flat seat with O-Ring.
Transformation from 3/4" Euroconus to 3/4" flat seat.

| Code | Connection | | |
|---|---|---|---|
| **383**000 | 3/4" M | 100 | - |



## 392

Temperature gauge fitting.
For distribution manifolds 592 and 350 series.

Temperature gauge scale: 0–80 °C
Ø: 40 mm

| Code | Connection 1 | Connection 2 | Notes | | |
|---|---|---|---|---|---|
| **392**600 | 1" F | 1" M | with PTFE seal | 1 | - |
| **392**700 | 1 1/4" F | 1 1/4" M | without PTFE seal | 1 | - |



## 657

Temperature gauge fitting.

Temperature gauge scale: 0–80 °C
Ø: 40 mm

| Code | Connection 1 | Connection 2 | | |
|---|---|---|---|---|
| **657**400 | 1/2" M | 1/2" F | 5 | - |



## 657

Temperature gauge fitting.
For distribution manifold outlets.

Temperature gauge scale: 0–80 °C
Ø: 40 mm

| Code | Connection 1 | Connection 2 | | |
|---|---|---|---|---|
| **657**050 | 3/4" M | 3/4" F captive nut | 1 | 12 |



## 669

Self cleaning flow meter.
Double reading scale.
Accuracy ±10%.

Maximum working pressure: 6 bar
Medium temperature range: 5–80 °C
Flow meter scale: 1–4 l/min

| Code | Connection 1 | Connection 2 | | |
|---|---|---|---|---|
| **669**050 | 3/4" M | 3/4" F captive nut | 1 | 10 |



## 688

Temperature gauge with pocket.

Temperature gauge scale: 0–80 °C
Ø: 40 mm

| Code | Connection | | |
|---|---|---|---|
| **688**002 | 1/4" M | 2 | - |



## 3642

Reduction fitting.

| Code | Connection 1 | Connection 2 | | |
|---|---|---|---|---|
| **364276** | 1" F | 1 1/4" M | 2 | - |



## 5991

End fitting.
For distribution manifolds 349, 350, 592, 650 and 663 series.

| Code | Connection 1 | Connection 2 | | |
|---|---|---|---|---|
| **599153** | 3/4" F | 3/8" F | 2 | - |
| **599154** | 3/4" F | 1/2" F | 2 | - |
| **599163** | 1" F | 3/8" F | 2 | - |
| **599164** | 1" F | 1/2" F | 2 | - |
| **599173** | 1 1/4" F | 3/8" F | 2 | - |
| **599174** | 1 1/4" F | 1/2" F | 2 | - |

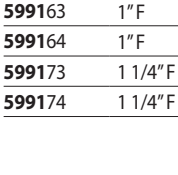

## 5993

Plug.
For distribution manifolds 349, 350, 592, 650 and 663 series.

| Code | Connection | | |
|---|---|---|---|
| **599350** | 3/4" F | 2 | 10 |
| **599360** | 1" F | 2 | 10 |
| **599370** | 1 1/4" F | 2 | 10 |



## 5994

Double radial end fitting.
For distribution manifolds 349, 350, 592, 650 and 663 series.

| Code | Manifold connection | Connection 1 | Connection 2 | | |
|---|---|---|---|---|---|
| **599453** | 3/4″ F | 1/2″ F | 3/8″ F | 2 | - |
| **599454** | 3/4″ F | 1/2″ F | 1/2″ F | 2 | - |
| **599463** | 1″ F | 1/2″ F | 3/8″ F | 2 | - |
| **599464** | 1″ F | 1/2″ F | 1/2″ F | 2 | - |
| **599473** | 1 1/4″ F | 1/2″ F | 3/8″ F | 2 | - |
| **599474** | 1 1/4″ F | 1/2″ F | 1/2″ F | 2 | - |



## 5995

Single radial end fitting.
For distribution manifolds 349, 350, 592, 650 and 663 series.

| Code | Manifold connection | Connection 1 | | |
|---|---|---|---|---|
| **599553** | 3/4″ F | 3/8″ F | 2 | - |
| **599563** | 1″ F | 3/8″ F | 2 | - |
| **599573** | 1 1/4″ F | 3/8″ F | 2 | - |



## 5996

Double radial end fitting.
For distribution manifolds 662 series.

| Code | Manifold connection | | |
|---|---|---|---|
| **599660** | 1″ F | 2 | 50 |



## 586

Female plug.

| Code | Connection | | |
|---|---|---|---|
| **586300** | 3/8″ F | 10 | - |
| **586400** | 1/2″ F | 10 | - |
| **586600** | 1″ F | 10 | - |



## 583

Female compression fitting for side outlets.

| Code | Connection 1 | Connection 2 | | |
|---|---|---|---|---|
| **583**034 | 3/8″ F olive | 1/2″ M, Ø 16 | 10 | - |
| **583**045 | 1/2″ F olive | 3/4″ M, Ø 18 | 10 | - |
| **583**064 | 1″ F olive | 1/2″ M, Ø 16 | 10 | - |
| **583**065 | 1″ F olive | 3/4″ M, Ø 18 | 10 | - |



## 584

Male compression fitting for outlets.

| Code | Connection 1 | Connection 2 | | |
|---|---|---|---|---|
| **584**053 | 3/4″ M olive | 3/8″ M, Ø 12 | 10 | - |
| **584**054 | 3/4″ M olive | 3/8″ M, Ø 16 | 10 | - |
| **584**055 | 3/4″ M olive | 3/4″ M, Ø 18 | 10 | - |
| **584**065 | 3/4″ M olive | 3/4″ M, Ø 18 | 10 | - |



## 585

Stiffener for copper pipe with wall thickness 0,75 and 1 mm.

| Code | Connection | Thickness (mm) | | |
|---|---|---|---|---|
| **585**010 | Ø 10 | 0,75 | 100 | - |
| **585**012 | Ø 12 | 0,75 | 100 | - |
| **585**014 | Ø 14 | 0,75 | 100 | - |
| **585**015 | Ø 15 | 0,75 | 100 | - |
| **585**016 | Ø 16 | 0,75 | 100 | - |
| **585**018 | Ø 18 | 0,75 | 100 | - |
| **585**110 | Ø 10 | 1 | 100 | - |
| **585**115 | Ø 15 | 1 | 100 | - |
| **585**116 | Ø 16 | 1 | 100 | - |
| **585**118 | Ø 18 | 1 | 100 | - |



## 386

Screw plug with nut, for distribution manifold outlets.

| Code | Connection | | |
|---|---|---|---|
| **386**500 | 3/4″ F | 1 | 10 |

# FITTINGS

## Fittings - threaded connections 23 p. 1.5



### 679 DARCAL

Fitting for multilayer plastic pipe for continuous high temperature use.

Maximum working pressure: 10 bar
Medium temperature range: 0–95 °C

| Code | Connection | Pipe diameter | | |
|---|---|---|---|---|
| **679**114 | 23 p. 1,5 | Ø 14x2 | 10 | 100 |
| **679**124 | 23 p. 1,5 | Ø 16x2 | 10 | 100 |
| **679**125 | 23 p. 1,5 | Ø 16x2,25 | 10 | 100 |
| **679**144 | 23 p. 1,5 | Ø 18x2 | 10 | 100 |

For a correct use, adjust the multilayer pipe diameter before installation using the Caleffi calibrator 679 series.

Calibrator 679 series page 106



### 680 DARCAL

Self-adjustable diameter fitting for single and multilayer plastic pipes.
Working temperature range 5–80°C (PE-X); 5–75°C (Multi-layer marked 95°C).

Maximum working pressure: 10 bar

| Code | Connection | Pipe diameter | | |
|---|---|---|---|---|
| **680**000 | 23 p. 1,5 | Øint. 7,5–8, Øext. 12–14 | 10 | 100 |
| **680**002 | 23 p. 1,5 | Øint. 9–9,5, Øext. 14–16 | 10 | 100 |
| **680**001 | 23 p. 1,5 | Øint. 9,5–10, Øext. 12–14 | 10 | 100 |
| **680**006 | 23 p. 1,5 | Øint. 9,5–10, Øext. 14–16 | 10 | 100 |
| **680**015 | 23 p. 1,5 | Øint. 10,5–11, Øext. 14–16 | 10 | 100 |
| **680**017 | 23 p. 1,5 | Øint. 10,5–11, Øext. 16–18 | 10 | 100 |
| **680**024 | 23 p. 1,5 | Øint. 11,5–12, Øext. 14–16 | 10 | 100 |
| **680**026 | 23 p. 1,5 | Øint. 11,5–12, Øext. 16–18 | 10 | 100 |
| **680**035 | 23 p. 1,5 | Øint. 12,5–13, Øext. 16–18 | 10 | 100 |
| **680**044 | 23 p. 1,5 | Øint. 13,5–14, Øext. 16–18 | 10 | 100 |



### 680 DARCAL

Self-adjustable diameter fitting for single and multilayer plastic pipes.
Working temperature range 5–80°C (PE-X); 5–75°C (Multi-layer marked 95°C).

Maximum working pressure: 10 bar

| Code | Connection | Pipe diameter | | |
|---|---|---|---|---|
| **680**055 | 23 p. 1,5 | Øint. 14,5–15, Øext. 18–20 | 10 | 100 |
| **680**064 | 23 p. 1,5 | Øint. 15,5–16, Øext. 18–20 | 10 | 100 |



### 446

Pre-assembled compression fitting, for annealed copper, hard copper, brass, mild steel and stainless steel pipes.
With O-Ring seal.

Maximum working pressure: 10 bar
Medium temperature range: -25–120 °C

| Code | Connection | Pipe diameter | | |
|---|---|---|---|---|
| **446**010 | 23 p. 1,5 | Ø 10 | 2 | 100 |
| **446**012 | 23 p. 1,5 | Ø 12 | 2 | 100 |
| **446**014 | 23 p. 1,5 | Ø 14 | 2 | 100 |
| **446**015 | 23 p. 1,5 | Ø 15 | 2 | 100 |
| **446**016 | 23 p. 1,5 | Ø 16 | 2 | 100 |



### 347

Compression ends fitting for annealed copper, hard copper, brass, mild steel and stainless steel pipes.
With O-Ring seal.

Maximum working pressure: 10 bar
Medium temperature range: -25–120 °C

| Code | Connection | Pipe diameter | | |
|---|---|---|---|---|
| **347**010 | 23 p. 1,5 | Ø 10 | 1 | 100 |
| **347**012 | 23 p. 1,5 | Ø 12 | 1 | 100 |
| **347**014 | 23 p. 1,5 | Ø 14 | 1 | 100 |
| **347**015 | 23 p. 1,5 | Ø 15 | 1 | 100 |
| **347**016 | 23 p. 1,5 | Ø 16 | 1 | 100 |

## Fittings - 3/4" and 1" threaded connections



# 679 DARCAL

Fitting for multilayer pipes with continuous high temperature use.

Maximum working pressure: 10 bar
Medium temperature range: 0–95 °C

| Code | Connection | Pipe diameter | | |
|---|---|---|---|---|
| **679**514 | 3/4" F | Ø 14x2 | 10 | 100 |
| **679**524 | 3/4" F | Ø 16x2 | 10 | 100 |
| **679**525 | 3/4" F | Ø 16x2,25 | 10 | 100 |
| **679**544 | 3/4" F | Ø 18x2 | 10 | 100 |
| **679**564 | 3/4" F | Ø 20x2 | 10 | 100 |
| **679**565 | 3/4" F | Ø 20x2,25 | 10 | 100 |
| **679**566 | 3/4" F | Ø 20x2,5 | 10 | 100 |

For a correct use, adjust the multilayer pipe diameter before installation using the Caleffi calibrator 679 series.

Calibrator 679 series page 106



# 680 DARCAL

Self-adjustable diameter fitting for single and multilayer plastic pipes.
Working temperature range 5–75°C (Multi-layer marked 95°C).

Maximum working pressure: 10 bar
Medium temperature range: 5–75 °C

| Code | Connection | Pipe diameter | | |
|---|---|---|---|---|
| **680**507 | 3/4" F | Øint. 7,5–8, Øext. 10,5–12 | 10 | 100 |
| **680**502 | 3/4" F | Øint. 7,5–8, Øext. 12–14 | 10 | 100 |
| **680**503 | 3/4" F | Øint. 8,5–9, Øext. 12–14 | 10 | 100 |
| **680**500 | 3/4" F | Øint. 9–9,5, Øext. 14–16 | 10 | 100 |
| **680**501 | 3/4" F | Øint. 9,5–10, Øext. 12–14 | 10 | 100 |
| **680**506 | 3/4" F | Øint. 9,5–10, Øext. 14–16 | 10 | 100 |
| **680**515 | 3/4" F | Øint. 10,5–11, Øext. 14–16 | 10 | 100 |
| **680**517 | 3/4" F | Øint. 10,5–11, Øext. 16–18 | 10 | 100 |
| **680**524 | 3/4" F | Øint. 11,5–12, Øext. 14–16 | 10 | 100 |
| **680**526 | 3/4" F | Øint. 11,5–12, Øext. 16–18 | 10 | 100 |
| **680**535 | 3/4" F | Øint. 12,5–13, Øext. 16–18 | 10 | 100 |
| **680**537 | 3/4" F | Øint. 12,5–13, Øext. 18–20 | 10 | 100 |
| **680**544 | 3/4" F | Øint. 13,5–14, Øext. 16–18 | 10 | 100 |
| **680**546 | 3/4" F | Øint. 13,5–14, Øext. 18–20 | 10 | 100 |
| **680**555 | 3/4" F | Øint. 14,5–15, Øext. 18–20 | 10 | 100 |
| **680**556 | 3/4" F | Øint. 15–15,5, Øext. 18–20 | 10 | 100 |
| **680**564 | 3/4" F | Øint. 15,5–16, Øext. 18–20 | 10 | 100 |
| **680**505 | 3/4" F | Øint. 17, Øext. 22 | 10 | 100 |



# 680

Self-adjustable diameter fitting for plastic pipes.

Maximum working pressure: 10 bar
Medium temperature range: 5–80 °C

| Code | Connection | Internal pipe diameter | External pipe diameter | | |
|---|---|---|---|---|---|
| **680**687 | 1" F | Øint. 17,5 | Øext. 25 | 10 | 100 |
| **680**605 | 1" F | Øint. 19,5 | Øext. 25 | 10 | 100 |



# 347

Compression ends fitting for annealed copper, hard copper, brass, mild steel and stainless steel pipes.
With O-Ring seal.

Maximum working pressure: 10 bar
Medium temperature range: -25–120 °C

| Code | Connection | Pipe diameter | | |
|---|---|---|---|---|
| **347**510 | 3/4" F | Ø 10 | 1 | 100 |
| **347**512 | 3/4" F | Ø 12 | 1 | 100 |
| **347**514 | 3/4" F | Ø 14 | 1 | 100 |
| **347**515 | 3/4" F | Ø 15 | 1 | 100 |
| **347**516 | 3/4" F | Ø 16 | 1 | 100 |
| **347**518 | 3/4" F | Ø 18 | 1 | 10 |



# 680 DARCAL

Compression ends fitting for multilayer pipe with fitting Male -female.

| Code | Connection | Pipe diameter | | |
|---|---|---|---|---|
| **680**285 | 3/4" F | Ø 25x2,5 | 10 | 60 |
| **680**296 | 3/4" F | Ø 26x3 | 10 | 60 |

**Example: 680 series fitting selection**

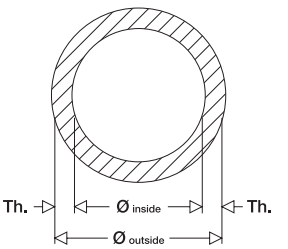


Known both the outside and inside diameters (**ex.: 17 mm** and **13 mm**);

or known the outside diameter (**ex.: Øo 17 mm**) and the thickness (**ex.: th. 2 mm**) and considering that:

**Øoutside − 2 · th. = Øinside**

**17 − 2 · 2 = 13 mm**

Look within the table for the code matching both diameters:

| Code | | $Ø_{inside}$ | $Ø_{outside}$ |
|---|---|---|---|
| **680**035 | 23 p.1,5 | 12,5–13 | 16–18 |

# INSPECTION WALL BOXES AND WALL PORTS

## Plastic inspection wall box



### 361

Plastic inspection wall port, with zinc plated sheet steel frame.

Finish: white

| Code | Height (mm) | Width (mm,) | | |
|---|---|---|---|---|
| **361**032 | 320 | 250 | 1 | 5 |
| **361**050 | 500 | 250 | 1 | 10 |



### 360

Plastic inspection wall box.
For distribution manifolds 349, 350, 592 and 354 series.
Version with foldable side walls.

Finish: white

| Code | Height (mm) | Width (mm,) | Depth (mm) | | |
|---|---|---|---|---|---|
| **360**032 | 320 | 250 | 90 | 1 | 10 |
| **360**050 | 500 | 250 | 90 | 1 | 10 |



### 363

Inspection wall port and frame in plastic.
Ventilated.

Finish: white

| Code | Height (mm) | Width (mm) | | |
|---|---|---|---|---|
| **363**036 | 360 | 270 | 1 | 10 |
| **363**056 | 560 | 330 | 1 | 5 |
| **363**073 | 730 | 360 | 1 | 5 |



### 362

Plastic inspection wall box.
Equipped with lateral protections.
For dual distribution manifolds 356, 357 series and single distribution manifolds 349, 350, 592 and 354 series.
Ventilated.

Finish: white

| Code | Height (mm) | Width (mm) | Depth (mm) | | |
|---|---|---|---|---|---|
| **362**036 | 360 | 270 | 100–80 | 1 | 10 |
| **362**056 | 560 | 330 | 100–80 | 1 | 5 |
| **362**073 | 730 | 360 | 100–80 | 1 | 5 |



### 360

Pair of mounting brackets for 3/4" and 1" dual distribution manifolds 356, 356 IS and 357 series.
For plastic inspection boxes 360 and 362 series.

| Code | | |
|---|---|---|
| **360**003 | 1 | - |



### 360

Pair of stainless steel mounting brackets for distribution manifolds 354 series.
For plastic inspection boxes 360 and 362 series.

| Code | | |
|---|---|---|
| **360**210 | 1 | 10 |



### 360

Mounting brackets for 1" single distribution manifolds 350 and 592 series, for 3/4" and 1" distribution manifolds 351 and 598 series.
For plastic inspection boxes 360 and 362 series.
Included in pack:
- 2 long supports;
- 2 short supports.

| Code | | |
|---|---|---|
| **360**001 | 1 | 10 |



### 360

Mounting brackets for 3/4" single distribution manifolds 349, 350 and 592 series.
For plastic inspection boxes 360 and 362 series.
Complete with:
– N. 2 long brackets
– N. 2 short brackets.

| Code | | |
|---|---|---|
| **360**002 | 1 | 10 |



### 362

Mounting brackets for dual distribution manifolds 356 and 357 series.
For plastic inspection boxes 362 series.

| Code | | |
|---|---|---|
| **362**001 | 1 | 10 |

## Sheet steel inspection wall boxes

### ADJUSTABLE DEPTH from 110 to 140 mm



**659**

Inspection wall box with **adjustable depth (110-140 mm)**.
Closure with a push-fit clamp.
Wall or floor installations (with 660 series).
For distribution manifolds 349, 350, 592, 662, 663, 668.S1, 671, 664 and 665 series.

Material: painted metal sheet

| Code | Height (mm) | Width (mm) | Depth (mm) | | |
|---|---|---|---|---|---|
| **659**044 | 500 | 400 | 110–140 | 1 | - |
| **659**064 | 500 | 600 | 110–140 | 1 | - |
| **659**084 | 500 | 800 | 110–140 | 1 | - |
| **659**104 | 500 | 1000 | 110–140 | 1 | - |
| **659**124 | 500 | 1200 | 110–140 | 1 | - |



**659**

Inspection wall port with frame.

Material: painted metal sheet

| Code | Article use | | |
|---|---|---|---|
| **659**304 | 659044 | 1 | - |
| **659**306 | 659064 | 1 | - |
| **659**308 | 659084 | 1 | - |
| **659**310 | 659104 | 1 | - |
| **659**312 | 659124 | 1 | - |

### ADJUSTABLE DEPTH from 80 to 120 mm



**659**

Inspection wall box with **adjustable depth (80-120 mm)**.
Complete with specific support for manifold brackets.
Closure with a push-fit clamp.
For distribution manifolds 349, 350, 592, 662, 671, 664 and 665 series.

Material: painted metal sheet

| Code | Height (mm) | Width (mm) | Depth (mm) | | |
|---|---|---|---|---|---|
| **659**045 | 500 | 400 | 80–120 | 1 | - |
| **659**065 | 500 | 600 | 80–120 | 1 | - |
| **659**085 | 500 | 800 | 80–120 | 1 | - |
| **659**105 | 500 | 1000 | 80–120 | 1 | - |



**659**

Inspection wall port with frame.

Material: painted metal sheet

| Code | Article use | | |
|---|---|---|---|
| **659**504 | 659045 | 1 | - |
| **659**506 | 659065 | 1 | - |
| **659**508 | 659085 | 1 | - |
| **659**510 | 659105 | 1 | - |

## Brackets for inspection wall boxes



### 658

Pair of mounting brackets 592, 350 and 351 series.
Complete with insulating clamps, screws and wall anchors.
To be used with boxes 659 series or directly wall mounted.

| Code | | |
|---|---|---|
| **658**000 | 1 | 20 |



### 658

Pair of steel mounting brackets for distribution manifolds 662 and 664 series.
To be used with boxes code 659..5 or directly wall mounted.

| Code | | |
|---|---|---|
| **658**101 | 1 | 20 |



### 658

Pair of mounting brackets for distribution manifolds 663 and 668...S1 series.
Complete with screws and wall anchors.
To be used with boxes 659 series or directly wall mounted.

| Code | | |
|---|---|---|
| **658**100 | 1 | 20 |



### 658

Pair of mounting brackets for 3/4" and 1" distribution manifolds 350 and 592 series.
Complete with clamps and screws.
To connect manifolds to zone valves.
To be used with boxes 659 series.

| Code | | |
|---|---|---|
| **658**200 | 1 | 25 |

# RADIANT PANEL SYSTEM CONTROL

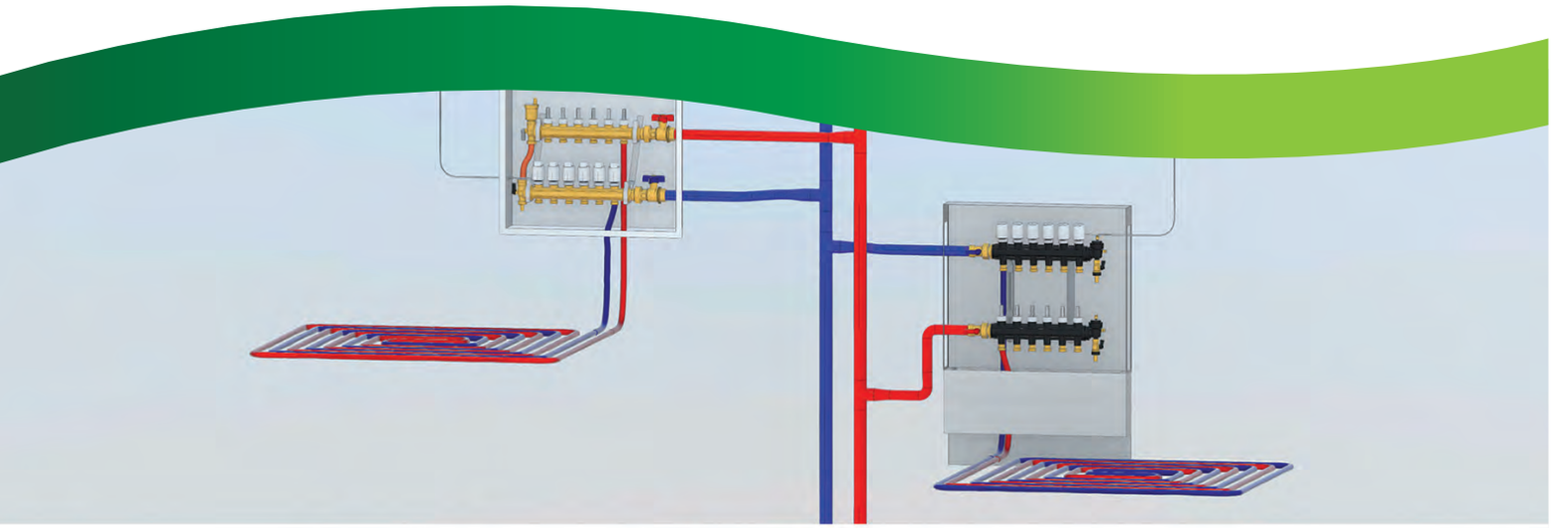

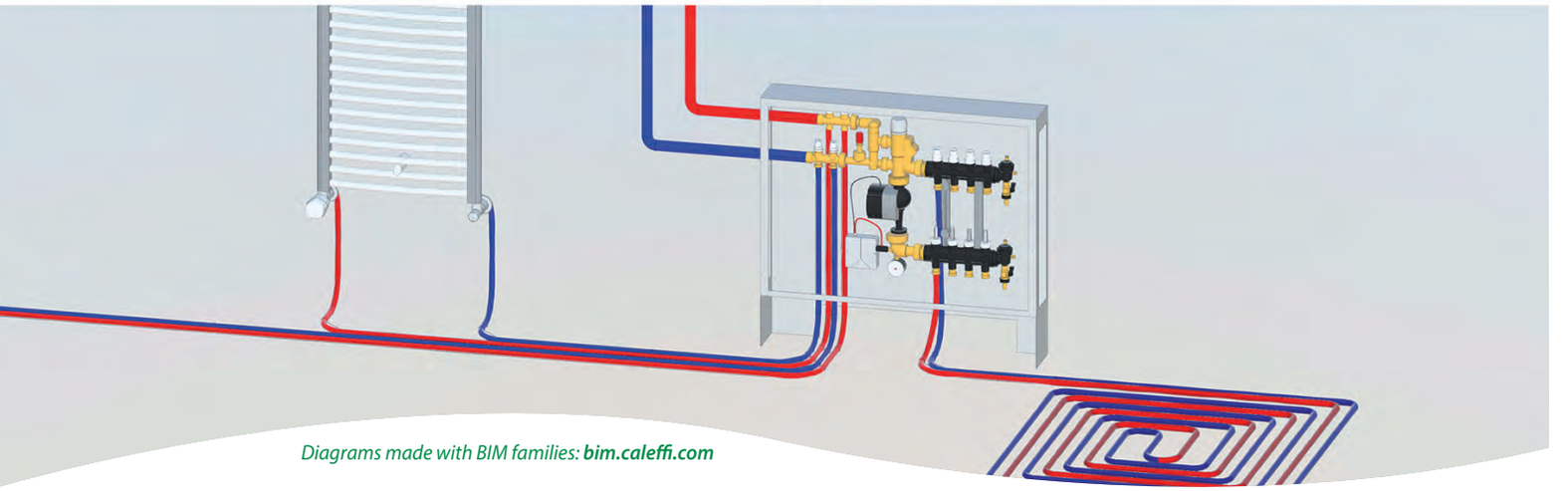

*Diagrams made with BIM families:* ***bim.caleffi.com***

**Distribution manifolds for radiant panel systems**
**Regulating units for radiant panel systems**
**Thermo-electric actuators**
**Inspection wall boxes and wall ports**

# MANIFOLDS FOR RADIANT PANEL SYSTEMS

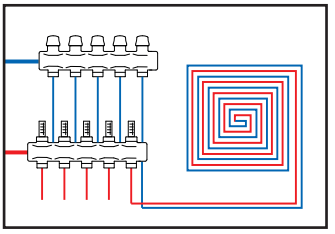

Manifolds for radiant panel systems are used for optimal distribution of the heating medium in floor heating system circuits and ultimately to improve heat emission control.

They are composed of:

- flow manifold; complete with flow meters and built-in regulating valves;
- return manifold; complete with shut-off valves with facility for thermo-electric actuator;
- end fittings complete with automatic valve and manual air vent with filler/drain cocks.

Modulating temperature regulating units or set point thermostatic regulating units can be coupled with the distribution manifolds.

## Distribution manifolds

**- Technopolymer distribution manifolds**

**- Differential pressure control valve for distribution manifolds**

**- Accessories for distribution manifolds**

**- Brass distribution manifolds**

**- Dynamic distribution manifolds**

## Distribution manifolds with regulating unit

**- Modulating temperature regulating unit with digital temperature**

**- Set point thermostatic regulating unit**

**- Set point thermostatic regulating unit with medium distribution kit for primary circuit**

**- Thermostatic mixing valve for radiant panel systems**

## Thermo-electric actuators and boxes for distribution manifolds

**- Thermo-electric actuators**

**- Boxes for distribution manifolds**

# DISTRIBUTION MANIFOLDS FOR RADIANT PANEL SYSTEMS

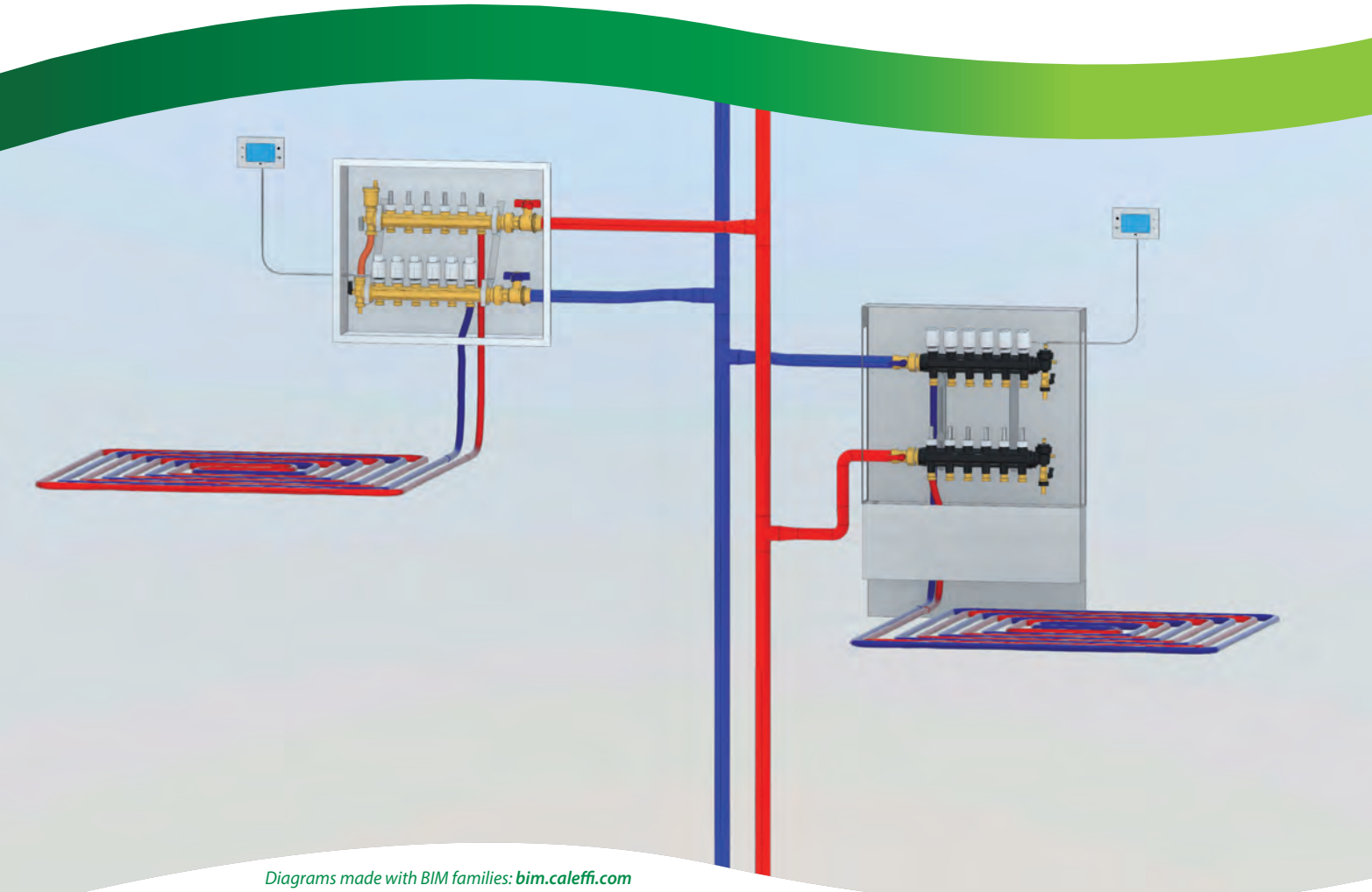

*Diagrams made with BIM families:* ***bim.caleffi.com***

**Technopolymer distribution manifolds with manual balancing, 1" connections**
**Accessories for technopolymer manifolds**
**Brass manifolds with micrometric preregulating valves, 1" connections**
**Brass manifolds with flow rate balancing valves, 1" connections**
**Dynamic distribution manifolds in brass, 1" connections**
**Accessories for distribution manifolds 1"**
**Changeover and distribution unit radiant panel fan-coil system**
**Brass distribution manifolds for radiant panel systems, connections 1" and 1 1/4"**

# DISTRIBUTION MANIFOLDS FOR RADIANT PANEL SYSTEMS

## Technopolymer distribution manifolds with manual balancing, 1" connections

### 671

Pre-assembled distribution manifold.
Complete with:
- technopolymer flow manifold with built-in flow meters and flow rate balancing valves;
- technopolymer return manifold with built-in shut-off valves fitted for thermo-electric actuator;
- technopolymer end fittings with automatic air vent with hygroscopic cap, discharge valve and fill/drain cock;
- pair of ball shut-off valves;
- LCD thermometers on flow and return manifolds;
- adhesive labels indicating the rooms;
- pair of mounting brackets for box or wall mounting;
- coupling adapter with clip code 675850, for manifold outlets (in package);
- template for cutting pipe code 675002 (in package).

Maximum working pressure: 6 bar
Medium temperature range: 5–60 °C



| Code | Main connection | Outlet connection | | |
|---|---|---|---|---|
| **671**6C1 | 1" F | 3/4" M - 3 out. | 1 | - |
| **671**6D1 | 1" F | 3/4" M - 4 out. | 1 | - |
| **671**6E1 | 1" F | 3/4" M - 5 out. | 1 | - |
| **671**6F1 | 1" F | 3/4" M - 6 out. | 1 | - |
| **671**6G1 | 1" F | 3/4" M - 7 out. | 1 | - |
| **671**6H1 | 1" F | 3/4" M - 8 out. | 1 | - |
| **671**6I1 | 1" F | 3/4" M - 9 out. | 1 | - |
| **671**6L1 | 1" F | 3/4" M - 10 out. | 1 | - |
| **671**6M1 | 1" F | 3/4" M - 11 out. | 1 | - |
| **671**6N1 | 1" F | 3/4" M - 12 out. | 1 | - |
| **671**6O1 | 1" F | 3/4" M - 13 out. | 1 | - |
| **671**6P1 | 1" F | 3/4" M - 14 out. | 1 | - |

## Accessories for technopolymer manifolds



### 675

Technopolymer end fitting.
Complete with automatic air vent with hygroscopic cap, discharge valve, fill/drain cock.

Maximum working pressure: 6 bar
Medium temperature range: 5–60 °C

| Code | Connection | | |
|---|---|---|---|
| **675**800 | 1 1/4" F | 20 | - |



### 675

Push-fit thermometer for panel piping.
Thermo-conductive paste supplied in package.
For pipes with outer diameter from 15 to 18 mm.
Thermal medium: Alcohol.

Temperature gauge scale: 5–50 °C

| Code | | |
|---|---|---|
| **675**900 | 10 | 100 |



### 675

Coupling adapter with clip.
For 671 series manifolds and 182 series regulating units.

| Code | Connection 1 | Connection 2 | | |
|---|---|---|---|---|
| **675**850 | 3/4" M | Ø 18 | 1 | 40 |



### 675

Cutting pipe template.

| Code | | |
|---|---|---|
| **675**002 | 10 | - |



### 182

Differential by-pass kit with fixed setting 25 kPa (2.500 mm w.g.).
Complete with flexible hose.
For 182 series regulating units and 670 and 671 series manifolds.

Maximum working pressure: 10 bar
Medium temperature range: 0–100 °C

| Code | Connection | | |
|---|---|---|---|
| **182**000 | 3/4" F | 1 | 5 |

# Brass manifolds with micrometric preregulating valves, 1" connections

## 662

Pre-assembled distribution manifold.
Complete with:
- return manifold with built-in shut-off valves fitted for thermo-electric actuator;
- flow manifold **with micrometric preregulating valves**;
- end fittings with automatic air vent and drain cock;
- polymer mounting brackets with adjustable centre distance for use with box 659 series or for direct wall mounting.

Maximum working pressure: 10 bar
Medium temperature range: 5–80 °C
Outlet centre distance: 50 mm



| Code | Connection | Outlet connection | | |
|---|---|---|---|---|
| **662**6B6 | 1" F | 3/4" M - 2 out. | 1 | - |
| **662**6C6 | 1" F | 3/4" M - 3 out. | 1 | - |
| **662**6D6 | 1" F | 3/4" M - 4 out. | 1 | - |
| **662**6E6 | 1" F | 3/4" M - 5 out. | 1 | - |
| **662**6F6 | 1" F | 3/4" M - 6 out. | 1 | - |
| **662**6G6 | 1" F | 3/4" M - 7 out. | 1 | - |
| **662**6H6 | 1" F | 3/4" M - 8 out. | 1 | - |
| **662**6I6 | 1" F | 3/4" M - 9 out. | 1 | - |
| **662**6L6 | 1" F | 3/4" M - 10 out. | 1 | - |
| **662**6M6 | 1" F | 3/4" M - 11 out. | 1 | - |
| **662**6N6 | 1" F | 3/4" M - 12 out. | 1 | - |
| **662**6O6 | 1" F | 3/4" M - 13 out. | 1 | - |

## 662

Pair of manifolds.
Complete with:
- return manifold with built-in shut-off valves fitted for thermo-electric actuator;
- flow manifold **with micrometric preregulating valves**.

Maximum working pressure: 10 bar
Medium temperature range: 5–80 °C
Outlet centre distance: 50 mm



| Code | Inlet connection | Outlet connection | Outlet connection | | |
|---|---|---|---|---|---|
| **662**626 | 1" F | 1" M | 3/4" M - 2 out. | 1 | 5 |
| **662**636 | 1" F | 1" M | 3/4" M - 3 out. | 1 | 5 |
| **662**646 | 1" F | 1" M | 3/4" M - 4 out. | 1 | 4 |
| **662**656 | 1" F | 1" M | 3/4" M - 5 out. | 1 | 4 |
| **662**666 | 1" F | 1" M | 3/4" M - 6 out. | 1 | 4 |

## 658

Polymer mounting brackets with adjustable centre distance, for distribution manifolds 662 and 664 series.
To be used with boxes code 659.4 (depth 110–140 mm), or directly wall mounted.
Complete with screws and wall anchors.



| Code | | |
|---|---|---|
| **658**400 | 1 | 5 |

## 5996

Return end fitting.
Complete with air vent and automatic shut-off cock.

Medium temperature range: 0–100 °C
Maximum air discharge pressure: 2,5 bar



| Code | Connection | | |
|---|---|---|---|
| **599**678 | 1" F | 1 | 10 |

## 5996

Flow end fitting.
Complete with manual air vent and automatic shut-off cock.

Maximum working pressure: 6 bar
Maximum air discharge pressure: 2,5 bar
Medium temperature range: 5–60 °C



| Code | Connection | | |
|---|---|---|---|
| **599**679 | 1" F | 1 | 10 |

# Brass manifolds with flow rate balancing valves, 1" connections

## 664

Pre-assembled distribution manifold.
Complete with:
- return manifold with built-in shut-off valves fitted for thermo-electric actuator;
- flow manifold **complete with flow meters 0–5 l/min scale** and flow rate balancing valves;
- end fittings with automatic air vent and drain cock;
- steel mounting brackets for use with box or for direct wall mounting.

Maximum working pressure: 6 bar
Medium temperature range: 5–60 °C
Outlet centre distance: 50 mm
Flow rate regulation range: 0–5 l/min

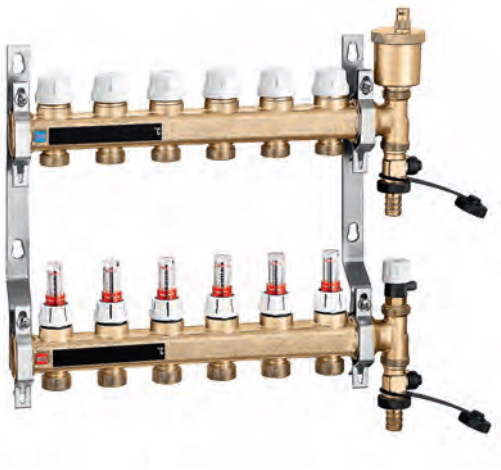

| Code | Main connection | Outlet connection | | |
|---|---|---|---|---|
| **6646**B1 | 1" F | 3/4" M - 2 out. | 1 | - |
| **6646**C1 | 1" F | 3/4" M - 3 out. | 1 | - |
| **6646**D1 | 1" F | 3/4" M - 4 out. | 1 | - |
| **6646**E1 | 1" F | 3/4" M - 5 out. | 1 | - |
| **6646**F1 | 1" F | 3/4" M - 6 out. | 1 | - |
| **6646**G1 | 1" F | 3/4" M - 7 out. | 1 | - |
| **6646**H1 | 1" F | 3/4" M - 8 out. | 1 | - |
| **6646**I1 | 1" F | 3/4" M - 9 out. | 1 | - |
| **6646**L1 | 1" F | 3/4" M - 10 out. | 1 | - |
| **6646**M1 | 1" F | 3/4" M - 11 out. | 1 | - |
| **6646**N1 | 1" F | 3/4" M - 12 out. | 1 | - |
| **6646**O1 | 1" F | 3/4" M - 13 out. | 1 | - |

## 664

Pair of manifolds.
Complete with:
- return manifold with built-in shut-off valves fitted for thermo-electric actuator;
- flow manifold **complete with flow meters 0–5 l/min scale** and flow rate balancing valves.

Maximum working pressure: 6 bar
Medium temperature range: 5–60 °C
Outlet centre distance: 50 mm



| Code | Inlet connection | Outlet connection | Outlet connection | | |
|---|---|---|---|---|---|
| **664**621 | 1" F | 1" M | 3/4" M - 2 out. | 1 | - |
| **664**631 | 1" F | 1" M | 3/4" M - 3 out. | 1 | - |
| **664**641 | 1" F | 1" M | 3/4" M - 4 out. | 1 | - |
| **664**651 | 1" F | 1" M | 3/4" M - 5 out. | 1 | - |
| **664**661 | 1" F | 1" M | 3/4" M - 6 out. | 1 | - |



## 658

Pair of steel mounting brackets for distribution manifolds 662 and 664 series.
To be used with boxes code 659..5 or directly wall mounted.

| Code | | |
|---|---|---|
| **658**101 | 1 | 20 |



## 5996

Return end fitting.
Complete with air vent and automatic shut-off cock.

Medium temperature range: 0–100 °C
Maximum air discharge pressure: 2,5 bar

| Code | Connection | | |
|---|---|---|---|
| **5996**78 | 1" F | 1 | 10 |



## 5996

Flow end fitting.
Complete with manual air vent and automatic shut-off cock.

Maximum working pressure: 6 bar
Maximum air discharge pressure: 2,5 bar
Medium temperature range: 5–60 °C

| Code | Connection | | |
|---|---|---|---|
| **5996**79 | 1" F | 1 | 10 |

# Dynamic distribution manifolds in brass, 1" connections

## 665 DYNAMICAL®

Pre-assembled distribution manifold.
Complete with:
- return manifold complete with DYNAMICAL flow regulating valves fitted for thermo-electric actuator;
- flow manifold complete with micrometric preregulation valves;
- end fittings consisting of air vent cocks, double radial end fittings and plug;
- pair of mounting polymer brackets with adjustable centre distance for 659 series box or wall mounting.

DYNAMICAL CARTRIDGE PATENT

Maximum working pressure: 6 bar
Medium temperature range: 5–60 °C
Outlet centre distance: 50 mm
Flow rate regulation range: 25–150 l/h



| Code | Main connection | Outlet connection | | |
|---|---|---|---|---|
| **665**6D1 | 1"F | 3/4" M - 4 out. | 1 | - |
| **665**6E1 | 1"F | 3/4" M - 5 out. | 1 | - |
| **665**6F1 | 1"F | 3/4" M - 6 out. | 1 | - |
| **665**6G1 | 1"F | 3/4" M - 7 out. | 1 | - |
| **665**6H1 | 1"F | 3/4" M - 8 out. | 1 | - |
| **665**6I1 | 1"F | 3/4" M - 9 out. | 1 | - |
| **665**6L1 | 1"F | 3/4" M - 10 out. | 1 | - |
| **665**6M1 | 1"F | 3/4" M - 11 out. | 1 | - |
| **665**6N1 | 1"F | 3/4" M - 12 out. | 1 | - |

**Function**

The DYNAMICAL® valve allows the **automatic dynamic balancing** and **pressure-independent adjustment** of the thermal medium in the radiators of two-pipe heating systems.
The device, in conjunction with a thermostatic, electronic or thermo-electric control, combines different functions in a single component.

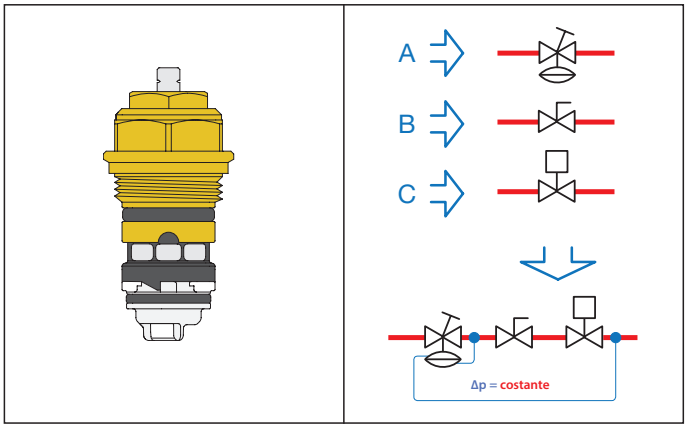


**A. Differential pressure regulator**, which automatically cancels the effect of the pressure fluctuations typical of variable flow rate systems and prevents noisy operation.

**B. Device for pre-setting flow rate**, which allows direct setting of the maximum flow rate value, thanks to the combination with the differential pressure regulator.

**C. Flow rate control depending on the ambient temperature**, thanks to the combination with a thermostatic control head. The flow rate control is optimised because it is pressure-independent.

## Accessories for distribution manifolds 1”



### 664

Insulation for distribution manifolds 662, 664 and 665 series.
For heating and cooling systems.
For use with box code 659..4 (adjustable depth from 110 to 140 mm).

| Code | Notes | | |
|---|---|---|---|
| CBN6646F1 | for manifolds with 2 to 6 outlets | 35 | - |
| CBN6646N1 | for manifolds with 7 to 12 outlets | 20 | - |
| CBN6646O1 | for manifolds with 13 outlets | 1 | - |



### 391

Pair of ball shut-off valves with O-Ring seal.
For distribution manifolds 664 and 665 series.

Maximum working pressure: 10 bar
Medium temperature range: 5–100 °C

| Code | Pipe connection | Manifold connection | | |
|---|---|---|---|---|
| **391**066 | 1”F | 1”M | 1 | 10 |



### 662

Off-centre by-pass assembly with fixed setting.
For 664 and 665 series manifolds.

Maximum working pressure: 10 bar
Medium temperature range: -10–110 °C
Differential pressure fixed setting: 25 kPa

| Code | | |
|---|---|---|
| **662**010 | 1 | 20 |



### 680 DARCAL

Self-adjustable diameter fitting for single and multilayer plastic pipes.
Working temperature range 5–75°C (Multi-layer marked 95°C).

Maximum working pressure: 10 bar
Medium temperature range: 5–75 °C

| Code | Connection | Pipe diameter | | |
|---|---|---|---|---|
| **680**507 | 3/4”F | Øint. 7,5–8, Øext. 10,5–12 | 10 | 100 |
| **680**502 | 3/4”F | Øint. 7,5–8, Øext. 12–14 | 10 | 100 |
| **680**503 | 3/4”F | Øint. 8,5–9, Øext. 12–14 | 10 | 100 |
| **680**500 | 3/4”F | Øint. 9–9,5, Øext. 14–16 | 10 | 100 |
| **680**501 | 3/4”F | Øint. 9,5–10, Øext. 12–14 | 10 | 100 |
| **680**506 | 3/4”F | Øint. 9,5–10, Øext. 14–16 | 10 | 100 |
| **680**515 | 3/4”F | Øint. 10,5–11, Øext. 14–16 | 10 | 100 |
| **680**517 | 3/4”F | Øint. 10,5–11, Øext. 16–18 | 10 | 100 |
| **680**524 | 3/4”F | Øint. 11,5–12, Øext. 14–16 | 10 | 100 |
| **680**526 | 3/4”F | Øint. 11,5–12, Øext. 16–18 | 10 | 100 |
| **680**535 | 3/4”F | Øint. 12,5–13, Øext. 16–18 | 10 | 100 |
| **680**537 | 3/4”F | Øint. 12,5–13, Øext. 18–20 | 10 | 100 |
| **680**544 | 3/4”F | Øint. 13,5–14, Øext. 16–18 | 10 | 100 |
| **680**546 | 3/4”F | Øint. 13,5–14, Øext. 18–20 | 10 | 100 |
| **680**555 | 3/4”F | Øint. 14,5–15, Øext. 18–20 | 10 | 100 |
| **680**556 | 3/4”F | Øint. 15–15,5, Øext. 18–20 | 10 | 100 |
| **680**564 | 3/4”F | Øint. 15,5–16, Øext. 18–20 | 10 | 100 |
| **680**505 | 3/4”F | Øint. 17, Øext. 22 | 10 | 100 |



### 386

Screw plug with nut, for distribution manifold outlets.

| Code | Connection | | |
|---|---|---|---|
| **386**500 | 3/4”F | 1 | 10 |



### 675

Push-fit thermometer for panel piping.
Thermo-conductive paste supplied in package.
For pipes with outer diameter from 15 to 18 mm.
Thermal medium: Alcohol.

Temperature gauge scale: 5–50 °C

| Code | | |
|---|---|---|
| **675**900 | 10 | 100 |

# Changeover and distribution unit radiant panel fan-coil system

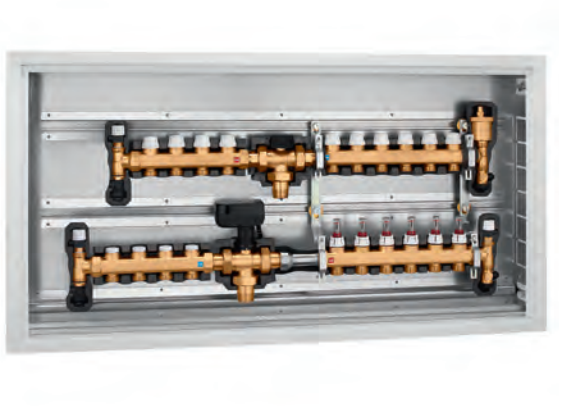

## 664

Changeover and distribution unit pre-assembled in box for radiant panel/ fan-coil systems.
Complete with:
- distribution manifold for radiant panel systems with flow meters and shut-off valves, insulated,
- distribution manifold for fan-coil systems with lockshield valves for preset flow rate and shut-off valves, insulated,
- three-way diverter valve with three-point control, complete with insulation and anti-condensation spacer,
- check valve kit,
- box with adjustable depth 110 - 140 mm.
**With insulation**.

Maximum working pressure: 6 bar
Medium temperature range: 5–60 °C
Electric supply: 230 V AC
Outlet centre distance: 50 mm

**Winter**

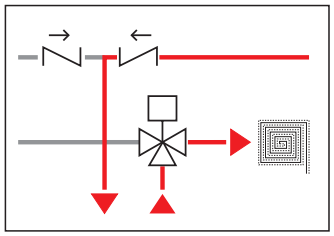

**Summer**

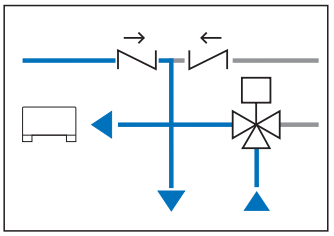

| Code | Main connection | Outlet connection to radiant panels | Outlet connection to fancoil | | |
|---|---|---|---|---|---|
| **664**0F1 | 1" M | 3/4" M - 6 out. | 3/4" M - 4 out. | 1 | - |
| **664**0G1 | 1" M | 3/4" M - 7 out. | 3/4" M - 4 out. | 1 | - |
| **664**0H1 | 1" M | 3/4" M - 8 out. | 3/4" M - 4 out. | 1 | - |
| **664**0I1 | 1" M | 3/4" M - 9 out. | 3/4" M - 4 out. | 1 | - |
| **664**0L1 | 1" M | 3/4" M - 10 out. | 3/4" M - 4 out. | 1 | - |
| **664**0M1 | 1" M | 3/4" M - 11 out. | 3/4" M - 4 out. | 1 | - |

# Brass distribution manifolds for radiant panel systems, connections 1" and 1 1/4"

## 668...S1

Pre-assembled distribution manifold. 1" and 11/4" connections.
Equipped with:
- flow manifold with built-in flow meters and flow rate balancing valves;
- return manifold with built-in shut-off valves fitted for thermo-electric actuator;
- end fittings with multi-position ball valve, automatic air vent and fill/drain hose connection;
- off-centre by-pass kit with fixed setting and with connecting pipe;
- ball shut-off valves;
- mounting brackets for box or wall mounting.

Maximum working pressure: 10 bar
Medium temperature range: 0–80 °C

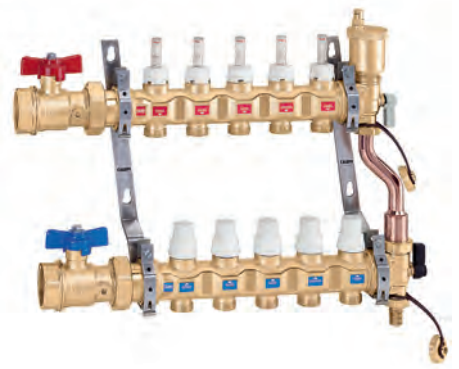

| Code | Main connection | Outlet connection | | |
|---|---|---|---|---|
| **668**6C5S1 | 1"F | 3/4" M - 3 out. | 1 | - |
| **668**6D5S1 | 1"F | 3/4" M - 4 out. | 1 | - |
| **668**6E5S1 | 1"F | 3/4" M - 5 out. | 1 | - |
| **668**6F5S1 | 1"F | 3/4" M - 6 out. | 1 | - |
| **668**6G5S1 | 1"F | 3/4" M - 7 out. | 1 | - |
| **668**6H5S1 | 1"F | 3/4" M - 8 out. | 1 | - |
| **668**6I5S1 | 1"F | 3/4" M - 9 out. | 1 | - |
| **668**6L5S1 | 1"F | 3/4" M - 10 out. | 1 | - |
| **668**6M5S1 | 1"F | 3/4" M - 11 out. | 1 | - |
| **668**6N5S1 | 1"F | 3/4" M - 12 out. | 1 | - |
| **668**6O5S1 | 1"F | 3/4" M - 13 out. | 1 | - |
| **668**6P5S1 | 1"F | 3/4" M - 14 out. | 1 | - |
| **668**7C5S1 | 1 1/4"F | 3/4" M - 3 out. | 1 | - |
| **668**7D5S1 | 1 1/4"F | 3/4" M - 4 out. | 1 | - |
| **668**7E5S1 | 1 1/4"F | 3/4" M - 5 out. | 1 | - |
| **668**7F5S1 | 1 1/4"F | 3/4" M - 6 out. | 1 | - |
| **668**7G5S1 | 1 1/4"F | 3/4" M - 7 out. | 1 | - |
| **668**7H5S1 | 1 1/4"F | 3/4" M - 8 out. | 1 | - |
| **668**7I5S1 | 1 1/4"F | 3/4" M - 9 out. | 1 | - |
| **668**7L5S1 | 1 1/4"F | 3/4" M - 10 out. | 1 | - |
| **668**7M5S1 | 1 1/4"F | 3/4" M - 11 out. | 1 | - |
| **668**7N5S1 | 1 1/4"F | 3/4" M - 12 out. | 1 | - |
| **668**7O5S1 | 1 1/4"F | 3/4" M - 13 out. | 1 | - |
| **668**7P5S1 | 1 1/4"F | 3/4" M - 14 out. | 1 | - |

## 668...S1



Pair of distribution manifolds.
Complete with built-in flow meters, flow rate balancing valves and shut-off valves.

Maximum working pressure: 10 bar
Medium temperature range: 0–80 °C
Outlet centre distance: 50 mm

| Code | Main connection | Outlet connection | | |
|---|---|---|---|---|
| **668**735S1 | 1 1/4"F | 3/4" M - 3 out. | 1 | 6 |
| **668**745S1 | 1 1/4"F | 3/4" M - 4 out. | 1 | 6 |
| **668**755S1 | 1 1/4"F | 3/4" M - 5 out. | 1 | 5 |
| **668**765S1 | 1 1/4"F | 3/4" M - 6 out. | 1 | 3 |
| **668**775S1 | 1 1/4"F | 3/4" M - 7 out. | 1 | 3 |
| **668**785S1 | 1 1/4"F | 3/4" M - 8 out. | 1 | 3 |

## 667...S1



Flow manifold.
Complete with built-in flow meters and flow rate balancing valves.

Maximum working pressure: 10 bar
Medium temperature range: 0–80 °C
Outlet centre distance: 50 mm

| Code | Main connection | Outlet connection | | |
|---|---|---|---|---|
| **667**735S1 | 1 1/4"F | 3/4" M - 3 out. | 2 | 12 |
| **667**745S1 | 1 1/4"F | 3/4" M - 4 out. | 2 | 12 |
| **667**755S1 | 1 1/4"F | 3/4" M - 5 out. | 2 | 12 |
| **667**765S1 | 1 1/4"F | 3/4" M - 6 out. | 2 | - |
| **667**775S1 | 1 1/4"F | 3/4" M - 7 out. | 2 | - |
| **667**785S1 | 1 1/4"F | 3/4" M - 8 out. | 2 | - |

## 666...S1



Return manifold.
Complete with built-in shut-off valve fitted for thermo-electric actuator.

Maximum working pressure: 10 bar
Medium temperature range: 0–80 °C
Outlet centre distance: 50 mm

| Code | Main connection | Outlet connection | | |
|---|---|---|---|---|
| **666**735S1 | 1 1/4"F | 3/4" M - 3 out. | 2 | 12 |
| **666**745S1 | 1 1/4"F | 3/4" M - 4 out. | 2 | 12 |
| **666**755S1 | 1 1/4"F | 3/4" M - 5 out. | 2 | 12 |
| **666**765S1 | 1 1/4"F | 3/4" M - 6 out. | 2 | - |
| **666**775S1 | 1 1/4"F | 3/4" M - 7 out. | 2 | - |
| **666**785S1 | 1 1/4"F | 3/4" M - 8 out. | 2 | - |



## 668...S1

Off-centre by-pass kit with fixed setting.
Complete with manifold connecting pipe.
For 668.S1 series manifolds.

Maximum working pressure: 10 bar
Medium temperature range: 0–100 °C
Pressure setting: 25 kPa

| Code | Connection 1 | Connection 2 | | |
|---|---|---|---|---|
| **668**000S1 | 1″ F captive nut | 3/4″ F captive nut | 1 | 10 |



## 391...S1

Pair of ball shut-off valves.
With Ø40 temperature gauge.

Maximum working pressure: 10 bar
Medium temperature range: 0–100 °C
Temperature gauge scale: 0–80 °C

| Code | Pipe connection | Manifold connection | | |
|---|---|---|---|---|
| 391167S1 | 1″ F | 1 1/4″ M | 1 | 5 |
| 391177S1 | 1 1/4″ F | 1 1/4″ M | 1 | 5 |



## 391...S1

Pair of ball shut-off valves.
With temperature gauge connection.

Maximum working pressure: 10 bar
Medium temperature range: 0–100 °C

| Code | Pipe connection | Manifold connection | | |
|---|---|---|---|---|
| 391067S1 | 1″ F | 1 1/4″ M | 1 | - |
| 391077S1 | 1 1/4″ F | 1 1/4″ M | 1 | - |



## 5996

Flow end fitting.
Complete with:
- two-position ball valve;
- automatic air vent with hygroscopic cap;
- filler/drain hose connection.

Maximum working pressure: 10 bar
Maximum air discharge pressure: 2,5 bar
Medium temperature range: 0–100 °C

| Code | Connection | | |
|---|---|---|---|
| **5996**74 | 1 1/4″ F | 1 | 10 |



## 5996

Return end fitting.
Complete with:
- double radial fitting complete with three-position ball valve;
- by-pass connection with plug and filler/drain hose connection.

Maximum working pressure: 10 bar
Medium temperature range: 0–100 °C

| Code | Connection | | |
|---|---|---|---|
| **5996**75 | 1 1/4″ F | 1 | 10 |



## 3642...S1

Reduction fitting.

| Code | Connection 1 | Connection 2 | | |
|---|---|---|---|---|
| 364276S1 | 1″ F | 1 1/4″ M | 2 | 10 |



## 347...S1

Compression fitting.

Maximum working pressure: 10 bar
Medium temperature range: -25–120 °C

| Code | Connection | Pipe diameter | | |
|---|---|---|---|---|
| 347512S1 | 3/4″ F | Ø 12 | 1 | 50 |
| 347514S1 | 3/4″ F | Ø 14 | 1 | 50 |



## 5020

Automatic air vent with hygroscopic cap.
For 668...S1 manifold end fittings.

Maximum working pressure: 10 bar
Maximum air discharge pressure: 2,5 bar
Medium temperature range: 0–110 °C
Material: brass

| Code | Connection | | |
|---|---|---|---|
| **5020**43 | 1/2″ M | 10 | 100 |



## 658

Pair of mounting brackets for distribution manifolds 663 and 668...S1 series.
Complete with screws and wall anchors.
To be used with boxes 659 series or directly wall mounted.

| Code | | |
|---|---|---|
| **658**100 | 1 | 20 |

# DISTRIBUTION MANIFOLDS WITH REGULATING UNIT

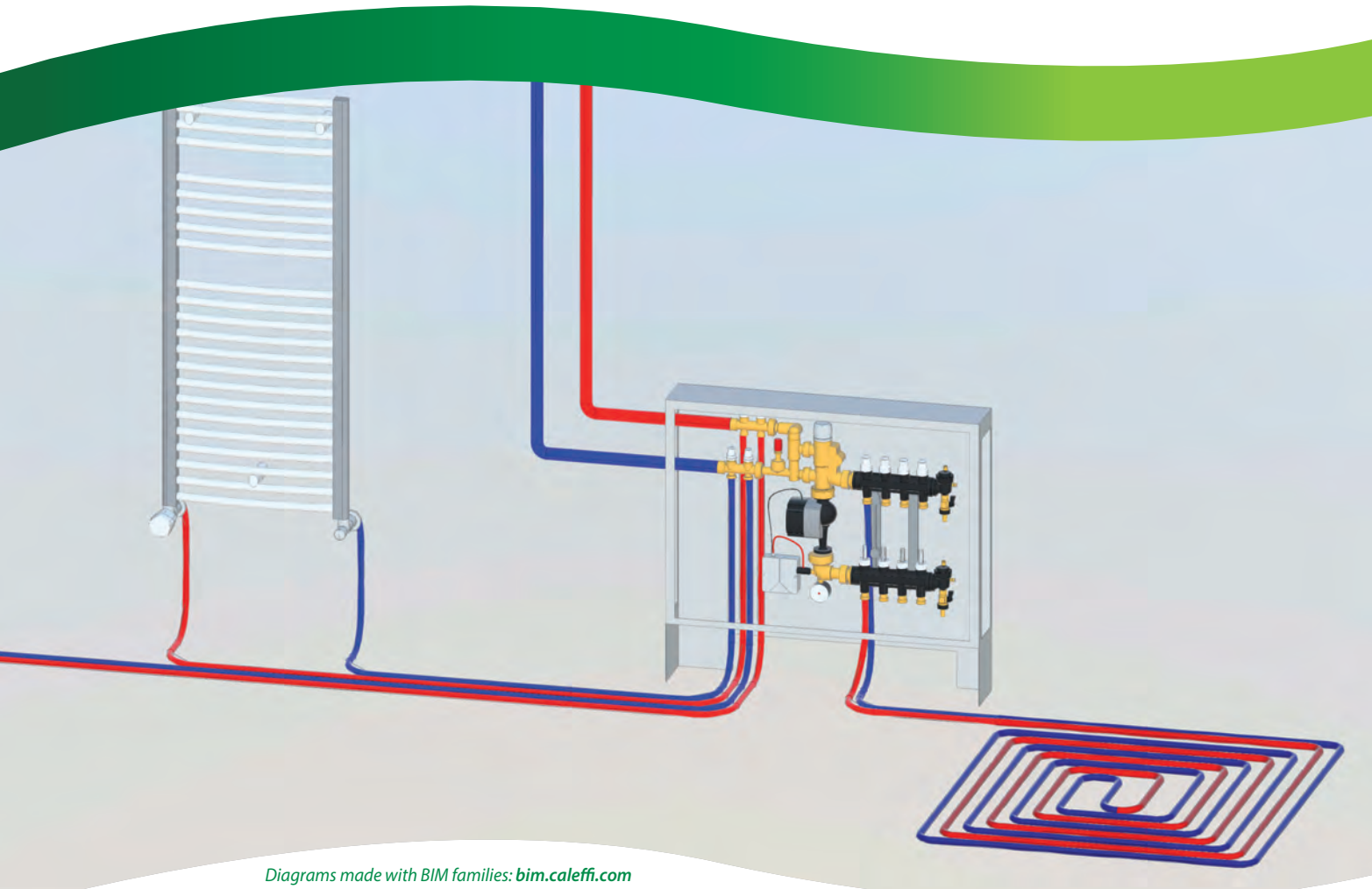

*Diagrams made with BIM families:* ***bim.caleffi.com***

**Set point thermostatic regulating units**
**Set point thermostatic regulating unit with medium distribution kit for primary circuit**
**Set point thermostatic regulating units, brass**
**Accessories for set point thermostatic regulating unit**
**Spare parts for set point thermostatic regulating units**
**Modulating temperature regulating unit with digital regulator**
**Accessories and spare parts for modulating temperature regulating unit**
**Thermostatic mixing valve for radiant panel systems**

# REGULATING UNITS FOR RADIANT PANEL SYSTEMS

## Set point thermostatic regulating units

### 182

Set point regulating unit pre-assembled in inspection wall box.
Complete with:
- set point thermostatic regulating unit;
- distribution manifolds in composite with built-in flow meters and shut-off valves;
- safety thermostat;
- high-efficiency pump;
- inspection wall box, with floor supports.

Maximum working pressure: 6 bar
Adjustment temperature range: 25–55 °C
Electric supply: 230 V AC



CE

| Code | Main connection | Outlet connection | | |
|---|---|---|---|---|
| **182**5C1A2L | 3/4" M | 3/4" M - 3 out. | 1 | - |
| **182**5D1A2L | 3/4" M | 3/4" M - 4 out. | 1 | - |
| **182**5E1A2L | 3/4" M | 3/4" M - 5 out. | 1 | - |
| **182**5F1A2L | 3/4" M | 3/4" M - 6 out. | 1 | - |
| **182**5G1A2L | 3/4" M | 3/4" M - 7 out. | 1 | - |
| **182**5H1A2L | 3/4" M | 3/4" M - 8 out. | 1 | - |
| **182**5I1A2L | 3/4" M | 3/4" M - 9 out. | 1 | - |
| **182**5L1A2L | 3/4" M | 3/4" M - 10 out. | 1 | - |
| **182**5M1A2L | 3/4" M | 3/4" M - 11 out. | 1 | - |
| **182**5N1A2L | 3/4" M | 3/4" M - 12 out. | 1 | - |
| **182**5O1A2L | 3/4" M | 3/4" M - 13 out. | 1 | - |

### 182

Set point regulating unit pre-assembled in inspection wall box.
Complete with:
- set point thermostatic regulating unit;
- distribution manifolds in composite with built-in flow meters and shut-off valves;
- safety thermostat;
- high efficiency pump.

Maximum working pressure: 6 bar
Adjustment temperature range: 25–55 °C
Electric supply: 230 V AC



CE

| Code | Main connection | Outlet connection | | |
|---|---|---|---|---|
| **182**5C5A2L | 3/4" M | 3/4" M - 3 out. | 1 | - |
| **182**5D5A2L | 3/4" M | 3/4" M - 4 out. | 1 | - |
| **182**5E5A2L | 3/4" M | 3/4" M - 5 out. | 1 | - |
| **182**5F5A2L | 3/4" M | 3/4" M - 6 out. | 1 | - |
| **182**5G5A2L | 3/4" M | 3/4" M - 7 out. | 1 | - |
| **182**5H5A2L | 3/4" M | 3/4" M - 8 out. | 1 | - |
| **182**5I5A2L | 3/4" M | 3/4" M - 9 out. | 1 | - |
| **182**5L5A2L | 3/4" M | 3/4" M - 10 out. | 1 | - |
| **182**5M5A2L | 3/4" M | 3/4" M - 11 out. | 1 | - |
| **182**5N5A2L | 3/4" M | 3/4" M - 12 out. | 1 | - |
| **182**5O5A2L | 3/4" M | 3/4" M - 13 out. | 1 | - |

# Set point thermostatic regulating unit with medium distribution kit for primary circuit

## 182

Set point regulating unit pre-assembled in inspection wall box, with medium distribution kit for primary circuit.
Complete with:
- set point thermostatic regulating unit;
- medium distribution kit with built-in lockshields and shut-off valves for primary circuit;
- distribution manifolds in composite with built-in flow meters and shut-off valves;
- primary circuit by-pass kit;
- safety thermostat;
- high-efficiency pump;
- inspection wall box, with floor supports.

Maximum working pressure: 6 bar
Adjustment temperature range: 25–55 °C
Electric supply: 230 V AC



CE

| Code | Main connection | Outlet connection | Radiator connection | | |
|---|---|---|---|---|---|
| **182**6C1A2L 002 | 1" F | 3/4" M - 3 out. | 3/4" M - 2 out. | 1 | - |
| **182**6D1A2L 002 | 1" F | 3/4" M - 4 out. | 3/4" M - 2 out. | 1 | - |
| **182**6E1A2L 002 | 1" F | 3/4" M - 5 out. | 3/4" M - 2 out. | 1 | - |
| **182**6F1A2L 002 | 1" F | 3/4" M - 6 out. | 3/4" M - 2 out. | 1 | - |
| **182**6G1A2L 002 | 1" F | 3/4" M - 7 out. | 3/4" M - 2 out. | 1 | - |
| **182**6H1A2L 002 | 1" F | 3/4" M - 8 out. | 3/4" M - 2 out. | 1 | - |
| **182**6I1A2L 002 | 1" F | 3/4" M - 9 out. | 3/4" M - 2 out. | 1 | - |
| **182**6L1A2L 002 | 1" F | 3/4" M - 10 out. | 3/4" M - 2 out. | 1 | - |
| **182**6M1A2L 002 | 1" F | 3/4" M - 11 out. | 3/4" M - 2 out. | 1 | - |
| **182**6N1A2L 002 | 1" F | 3/4" M - 12 out. | 3/4" M - 2 out. | 1 | - |
| **182**6O1A2L 002 | 1" F | 3/4" M - 13 out. | 3/4" M - 2 out. | 1 | - |

## 182

Set point regulating unit pre-assembled, with medium distribution kit for primary circuit.
Complete with:
- thermostatic set point regulating unit;
- medium distribution kit with built-in lockshields and shut-off valves for primary circuit;
- distribution manifolds in composite with built-in flow meters and shut-off valves;
- primary circuit by-pass kit;
- safety thermostat;
- high-efficiency pump.

Maximum working pressure: 6 bar
Adjustment temperature range: 25–55 °C
Electric supply: 230 V AC

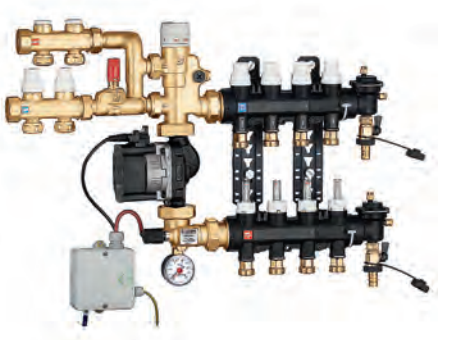

CE

| Code | Main connection | Outlet connection | Radiator connection | | |
|---|---|---|---|---|---|
| **182**6C5A2L 002 | 1" F | 3/4" M - 3 out. | 3/4" M - 2 out. | 1 | - |
| **182**6D5A2L 002 | 1" F | 3/4" M - 4 out. | 3/4" M - 2 out. | 1 | - |
| **182**6E5A2L 002 | 1" F | 3/4" M - 5 out. | 3/4" M - 2 out. | 1 | - |
| **182**6F5A2L 002 | 1" F | 3/4" M - 6 out. | 3/4" M - 2 out. | 1 | - |
| **182**6G5A2L 002 | 1" F | 3/4" M - 7 out. | 3/4" M - 2 out. | 1 | - |
| **182**6H5A2L 002 | 1" F | 3/4" M - 8 out. | 3/4" M - 2 out. | 1 | - |
| **182**6I5A2L 002 | 1" F | 3/4" M - 9 out. | 3/4" M - 2 out. | 1 | - |
| **182**6L5A2L 002 | 1" F | 3/4" M - 10 out. | 3/4" M - 2 out. | 1 | - |
| **182**6M5A2L 002 | 1" F | 3/4" M - 11 out. | 3/4" M - 2 out. | 1 | - |
| **182**6N5A2L 002 | 1" F | 3/4" M - 12 out. | 3/4" M - 2 out. | 1 | - |
| **182**6O5A2L 002 | 1" F | 3/4" M - 13 out. | 3/4" M - 2 out. | 1 | - |

# Set point thermostatic regulating units, brass

## 182

Set point regulating unit pre-assembled in inspection wall box.
Complete with:
- set point thermostatic regulating unit,- return manifold with built-in shut-off valves fitted for thermo-electric actuator;
- return manifold with built-in shut-off valves fitted for thermo-electric actuator;
- flow manifold complete with flow meters with 0–5 l/m scale and flow rate balancing valves;
- end fittings with automatic air vent and drain cock;
- safety thermostat;
- high-efficiency pump, UPM3 Auto L 25-70;
- inspection wall box, with floor supports.

Brass manifold body.

Maximum working pressure: 6 bar
Adjustment temperature range: 25–55 °C
Electric supply: 230 V AC



CE

| Code | Connection | Outlet connection | Width (mm) | | |
|---|---|---|---|---|---|
| **182**5C7A2L | 3/4" M | 3/4" M - 3 out. | 600 | 1 | - |
| **182**5D7A2L | 3/4" M | 3/4" M - 4 out. | 600 | 1 | - |
| **182**5E7A2L | 3/4" M | 3/4" M - 5 out. | 600 | 1 | - |
| **182**5F7A2L | 3/4" M | 3/4" M - 6 out. | 800 | 1 | - |
| **182**5G7A2L | 3/4" M | 3/4" M - 7 out. | 800 | 1 | - |
| **182**5H7A2L | 3/4" M | 3/4" M - 8 out. | 800 | 1 | - |
| **182**5I7A2L | 3/4" M | 3/4" M - 9 out. | 800 | 1 | - |
| **182**5L7A2L | 3/4" M | 3/4" M - 10 out. | 1000 | 1 | - |
| **182**5M7A2L | 3/4" M | 3/4" M - 11 out. | 1000 | 1 | - |
| **182**5N7A2L | 3/4" M | 3/4" M - 12 out. | 1000 | 1 | - |
| **182**5O7A2L | 3/4" M | 3/4" M - 13 out. | 1000 | 1 | - |



## 182

Pre-assembled set point regulating unit.
Complete with:
- set point thermostatic regulating unit;
- safety thermostat;
- high-efficiency pump.

Maximum working pressure: 10 bar
Adjustment temperature range: 25–55 °C
Electric supply: 230 V AC

CE

| Code | Connection | | |
|---|---|---|---|
| **182**521A2L | 3/4" M | 1 | - |



## 182

Set point regulating unit.
Complete with:
- set point thermostatic regulating unit;
- medium distribution kit with built-in lockshields and shut-off valves for primary circuit;
- primary circuit by-pass kit;
- safety thermostat;
- high-efficiency pump.

Maximum working pressure: 10 bar
Adjustment temperature range: 25–55 °C
Electric supply: 230 V AC

CE

| Code | Connection 1 | Connection 2 | Outlet connection | | |
|---|---|---|---|---|---|
| **182**621A2L 002 | 1" F | 1 1/4" F | 3/4" M - 2 out. | 1 | - |
| **182**621A2L 003 | 1" F | 1 1/4" F | 3/4" M - 3 out. | 1 | - |

### Coupling regulating units and manifolds

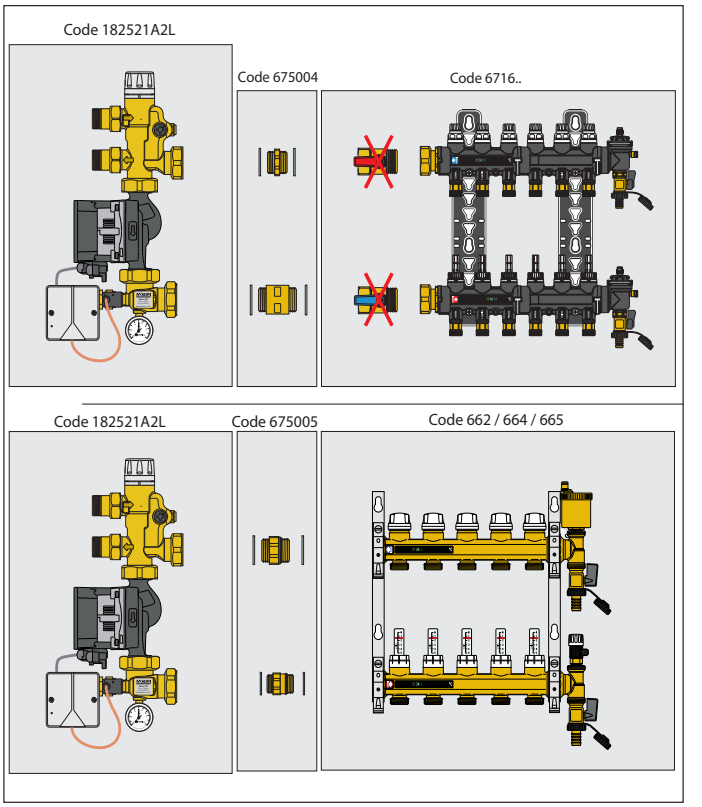


*Diagram referred to installation in a box*

## Accessories for set point thermostatic regulating unit



### 661

Adjustable depth box for manifolds 662, 671 and 668.S1, 664 and 665 series and regulating units 182 series.
Complete with supports for floor installation.
Closure with a push-fit clamp.

Material: painted metal sheet

| Code | Height (mm) | Width (mm) | Depth (mm) | | |
|---|---|---|---|---|---|
| **661**045 | 500 | 400 | 110–150 | 1 | - |
| **661**065 | 500 | 600 | 110–150 | 1 | - |
| **661**085 | 500 | 800 | 110–150 | 1 | - |
| **661**105 | 500 | 1000 | 110–150 | 1 | - |
| **661**125 | 500 | 1200 | 110–150 | 1 | - |



### 182

Differential by-pass kit with fixed setting 25 kPa (2.500 mm w.g.).
Complete with flexible hose.
For 182 series regulating units and 670 and 671 series manifolds.

Maximum working pressure: 10 bar
Medium temperature range: 0–100 °C

| Code | Connection | | |
|---|---|---|---|
| **182**000 | 3/4" F | 1 | 5 |



### 675

Pair of fittings with seals for connection of 182 series groups to 662 and 664 series manifolds.

| Code | Connection 1 | Connection 2 | | |
|---|---|---|---|---|
| **675**005 | 1 1/4" M | 1" M | 1 | - |



### 675

Pair of fittings with seals for connection of 182 series groups to 670 and 671 series manifolds.

| Code | Connection 1 | Connection 2 | | |
|---|---|---|---|---|
| **675**004 | 1 1/4" M | 1" M | 1 | - |

## Spare parts for set point thermostatic regulating units



Safety thermostat + cable.

| Code | Notes | | |
|---|---|---|---|
| F0000972 | | 1 | - |



Thermostatic mixing valve unit for 182 series.

| Code | Notes | | |
|---|---|---|---|
| F19267 | | 1 | - |



Spare electronic board.

| Code | Notes | | |
|---|---|---|---|
| F19219 | | 1 | - |



Spare pump UPM3S Auto 25-60.
Complete with supply cable.

Outlet centre distance: 130 mm

CE

| Code | Type of pump | | |
|---|---|---|---|
| F0001252 | UPM3S Auto 25-60 | 1 | - |

## Modulating temperature regulating unit with digital regulator



### 171

Modulating temperature regulating unit.
Complete with:
- climate heating control unit with digital compensated set point regulation, can be converted to outside compensated regulation;
- primary circuit by-pass kit;
- primary circuit shut-off valves;
- medium distribution kit with built-in lockshield valves and shut-off valves for the primary circuit;
- high-efficiency pump.

Maximum working pressure: 10 bar
Adjustment temperature range: 5–95 °C
Electric supply: 230 V AC

CE

| Code | Connection | | |
|---|---|---|---|
| **171**525A2L | 3/4″ M | 1 | - |



### 171

Modulating temperature regulating unit, with medium distribution kit for primary circuit.
Complete with:
- climate heating control unit with digital compensated set point regulation, can be converted to outside compensated regulation;
- primary circuit by-pass kit;
- primary circuit shut-off valves;
- medium distribution kit with built-in lockshield valves and shut-off valves for the primary circuit;
- high-efficiency pump.

Maximum working pressure: 10 bar
Adjustment temperature range: 5–95 °C
Electric supply: 230 V AC

CE

| Code | Connection | Outlet connection | | |
|---|---|---|---|---|
| **171**525A2L 002 | 1 1/4″ F | 3/4″ M - 2 out. | 1 | - |
| **171**525A2L 003 | 1 1/4″ F | 3/4″ M - 3 out. | 1 | - |



### 675

Pair of fittings with seals for connection of 171 series groups to 671 series manifolds.

| Code | Connection | | |
|---|---|---|---|
| **675**003 | 1″ M | 1 | - |



### 364

Pair of fittings with seals for connection of 171 series groups to 668 series manifolds.

| Code | | |
|---|---|---|
| **364**377 | 1 | 10 |



### 658

Pair of steel mounting brackets for coupling of distribution manifolds 662/664/665 and 171 series group.

| Code | | |
|---|---|---|
| **658**011 | 1 | 20 |



### 171

Pair of fittings with seals for connection of 171 series groups to 662/664/665 series manifolds.

| Code | | |
|---|---|---|
| F0000662 | 2 | - |



Box for 171 series units.
Complete with supports for floor installation.

Depth: 110–150 mm
Height: 500 mm
Material: painted metal sheet

| Code | Width (mm) | | |
|---|---|---|---|
| 661064 | 1400 | 1 | - |
| 661084 | 1600 | 1 | - |
| 661104 | 1800 | 1 | - |
| 661124 | 1000 | 1 | - |



### 661

Inspection wall port with frame.

Material: painted metal sheet

| Code | Article use | | |
|---|---|---|---|
| **661**406 | 661064 | 1 | - |
| **661**408 | 661084 | 1 | - |
| **661**410 | 661104 | 1 | - |
| **661**412 | 661124 | 1 | - |

**Coupling regulating units and manifolds**

Code 171525A2L

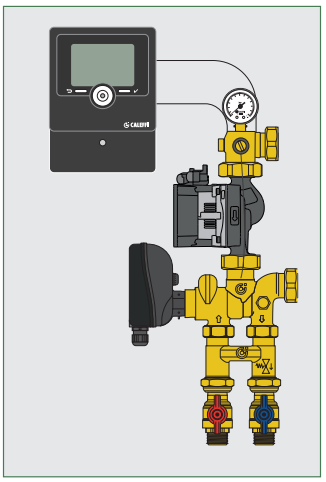

Code 675003



Code 6716..

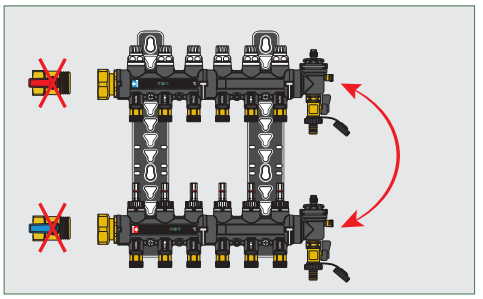

---

Code 171525A2L

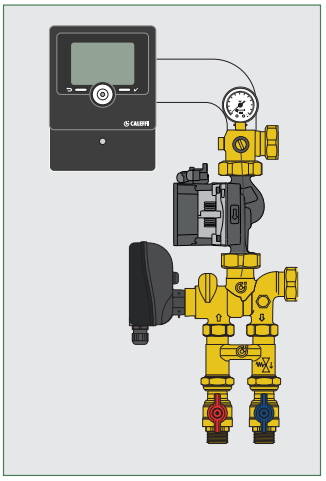

Code F0000662

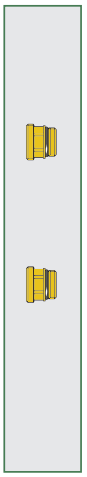

Code 662 / 664 / 665

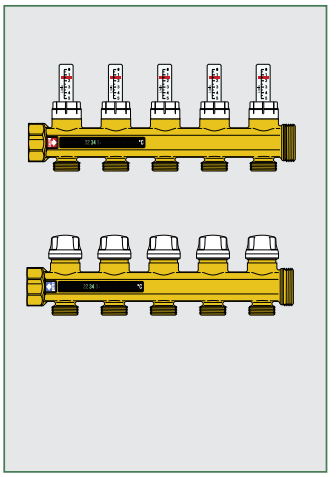

Code 599678

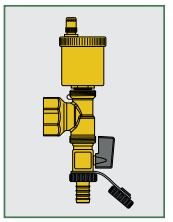

Code 599679

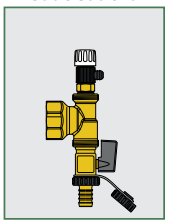

Code 658011

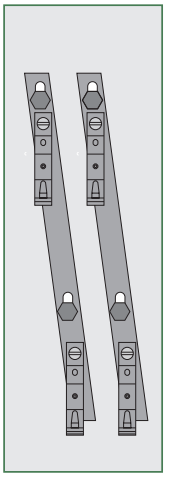

---

Code 171525A2L

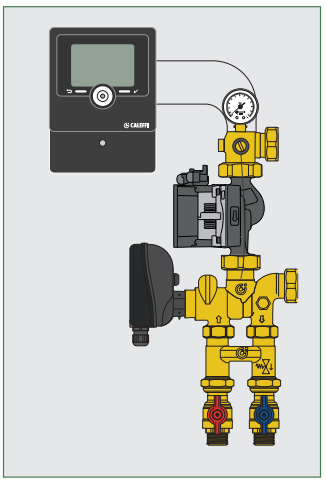

Code 364377



Code 668...S1

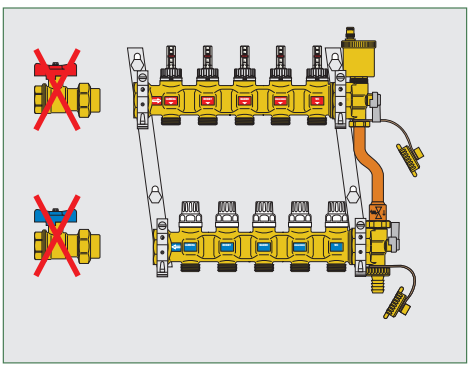

*Diagram referred to installation in a box*

# Accessories and spare parts for modulating temperature regulating unit



## 161

Outside temperature probe.

| Code | | | |
|---|---|---|---|
| **161**002 | 1 | - | |



## 161

Pressure safety switch.
Complete with cable for wiring.

Medium temperature range: 5–100 °C
Supply cable length: 1 m
Adjustment pressure range: 0,5–10 bar

| Code | | | |
|---|---|---|---|
| **161**003 | 1 | - | |



## 161

Dew point detector.

Working range (humidity) UR: 30–100 %

| Code | | | |
|---|---|---|---|
| **161**004 | 1 | - | |



## 161

Centralised probe for regulator 161 series.

CE

| Code | | | |
|---|---|---|---|
| **161**020 | 1 | - | |



## 161

Remote regulator.
Functions:
- translation of the setting curves, from +15 K to -15 K;
- maximum temperature;
- position OFF.

| Code | | | |
|---|---|---|---|
| **161**005 | 1 | - | |



## 161

Pt1000 contact probe for pipes, Ø 6 mm.

| Code | Notes | Article use | | |
|---|---|---|---|---|
| **161**012 | L cable 2,5 m | 161010 | 1 | - |



## 161

Pt1000 probe pocket, size 1/2" M.

| Code | Notes | Article use | | |
|---|---|---|---|---|
| **161**013 | L 60 mm | 161010 | 1 | - |
| **161**014 | L 100 mm | 161010, 150006, 257006 | 1 | - |



## 161

Pt1000 probe, Ø6 mm.

| Code | Notes | Article use | | |
|---|---|---|---|---|
| **161**015 | L 20 mm, L cable 1,5 m | 161010 | 1 | - |
| **161**006 | L 45 mm, L cable 2,5 m | 161010 | 1 | - |



## 161

Digital regulator with synoptic diagram **for heating and cooling**.
Complete with immersion flow probes with pocket and Pt1000 Ø 6 mm return probe (pocket to be chosen according to the pipe, see accessories).
Optional climatic probe.

Adjustment temperature range: 5–95 °C
Electric supply: 230 V AC
Protection class: IP 20
Probe/cable length: 1,5 m
Control signal: 3 point, 0–10 V

CE

| Code | | | |
|---|---|---|---|
| **161**010 | 1 | - | |



Spare parts for mixing valve unit and actuator.

| Code | Notes | | |
|---|---|---|---|
| F19223 | mixing valve unit with motor support | 1 | - |



## 6453

Actuator for mixing valve for 1715.5 series.
For climate heating control unit with digital regulator 171 series.

| Code | Electric supply | | |
|---|---|---|---|
| **6453**12 | 230 V AC | 1 | - |



Spare pump UPM3S Auto 25-60.
Complete with supply cable.

Outlet centre distance: 130 mm

| Code | Type of pump | | |
|---|---|---|---|
| F0001252 | UPM3S Auto 25-60 | 1 | - |



Pocket.
For climate heating control unit with digital regulator 171 series. Ø6 mm for probe Pt1000 L 20 mm.

| Code | Connection | Notes | | |
|---|---|---|---|---|
| F0000560 | 1/8" M | | 1 | - |

# Thermostatic mixing valve for radiant panel systems



## 5202

Adjustable thermostatic mixing valve with knob.
For radiant panel systems.

Maximum working pressure: 10 bar
Medium temperature range: 2–85 °C
Material: dezincification resistant brass DR

| Code | Connection | DN | Adjustment temperature (°C) | Kv ($m^3/h$) | | |
|---|---|---|---|---|---|---|
| **5202**51 | 3/4″ M | DN 20 | 20–43 | 1,4 | 1 | 25 |
| **5202**61 | 1″ M | DN 25 | 20–43 | 4 | 1 | 5 |

**Application diagram**

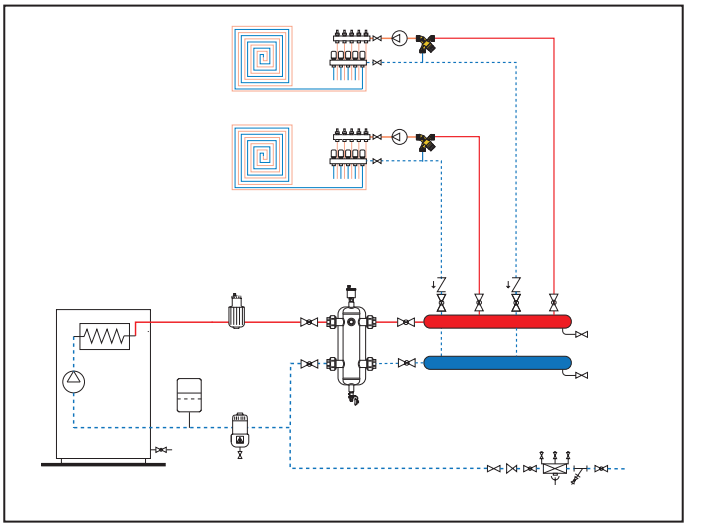



## 166

Thermostatic mixing valve.
**For 166 series units.**

Maximum working pressure: 10 bar
Medium temperature range: 5–110 °C
Kv: 4,1 $m^3/h$

| Code | System side connection | Connection | Mixed connection | DN | Adjustment temperature (°C) | | |
|---|---|---|---|---|---|---|---|
| **166**001 | 1 1/2″ M | 1 1/4″ M | 1 1/2″ F captive nut | DN 20 | 25–50 | 1 | - |
| **166**005 | 1 1/2″ M | 1 1/4″ M | 1 1/2″ F captive nut | DN 20 | 40–70 | 1 | - |

**Application diagram**

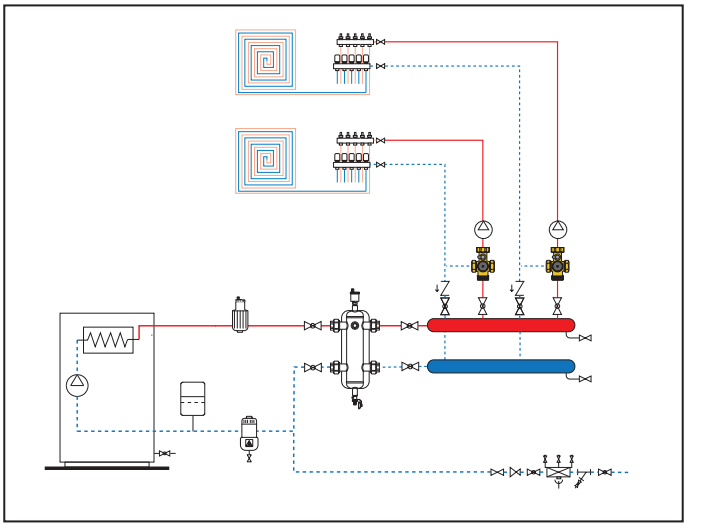

# THERMO-ELECTRIC ACTUATORS AND BOXES FOR DISTRIBUTION MANIFOLD

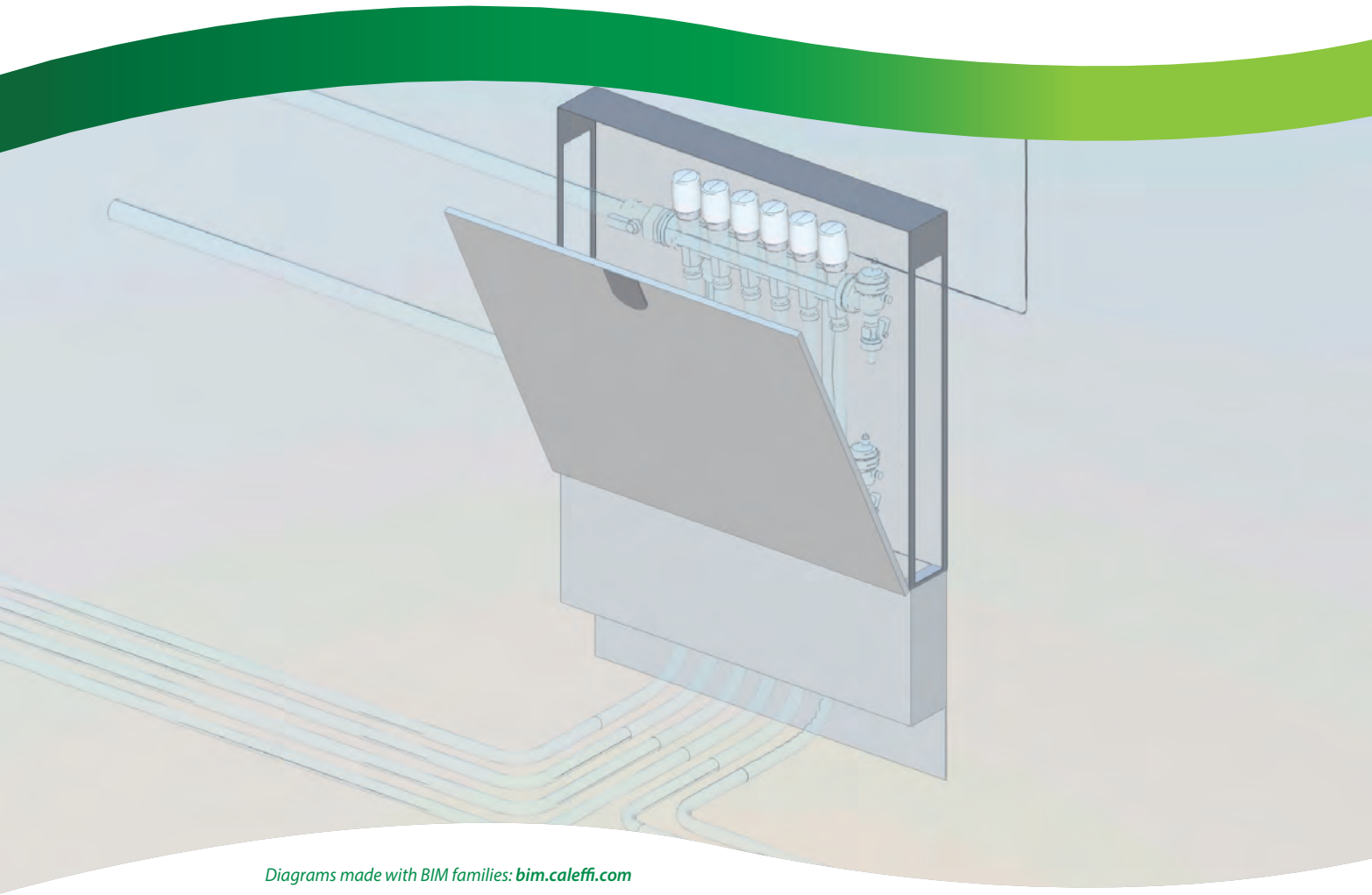

*Diagrams made with BIM families:* ***bim.caleffi.com***

**Thermo-electric actuator - threaded connection**
**Thermo-electric actuator - push fit connection**
**Boxes for distribution manifolds from 110 to 140 mm**
**Boxes for distribution manifolds from 80 to 120 mm**
**Boxes for distribution manifolds from 110 to 150 mm**

# THERMO-ELECTRIC ACTUATORS

## Thermo-electric actuator - threaded connection



### 6561

Thermo-electric actuator **with auxiliary microswitch**.
Normally closed.
For valves 338, 339, 401, 402, 425, 426, 421, 422, 455, 456, 220, 221, 222, 223, 224, 225, 226, 227, 230, 231, 232, 233, 234, 237, 676, 677, 678 series and manifolds 670, 671, 668. S1,664, 665 series.
**With auxiliary microswitch**.

Ambient temperature range: 0–50 °C
Protection class: IP 44 (vertical position)
Supply cable length: 0,8 m
Auxiliary microswitch contact rating (230 V): 0,8 A
Starting current: ≤ 1 A

CE

| Code | Electric supply | | |
|---|---|---|---|
| **6561**12 | 230 V AC | 1 | 10 |
| **6561**14 | 24 V AC/DC | 1 | 10 |



### 6561

Thermo-electric actuator.
Normally closed.
For valves 338, 339, 401, 402, 425, 426, 421, 422, 230, 231, 232, 233, 234, 237, 220, 221, 222, 223, 224, 225, 226, 227, 455 and 456 series.

Ambient temperature range: 0–50 °C
Protection class: IP 44 (vertical position)
Supply cable length: 0,8 m
Starting current: ≤ 1 A

CE

| Code | Electric supply | | |
|---|---|---|---|
| **6561**02 | 230 V AC | 1 | 10 |
| **6561**04 | 24 V AC/DC | 1 | 10 |



### 6563

Thermo-electric actuator **with manual opening and position indicator**.
Normally closed.
For valves 338, 339, 401, 402, 425, 426, 421, 422, 455, 456, 220, 221, 222, 223, 224, 225, 226, 227, 230, 231, 232, 233, 234, 237, 676, 677, 678 series and distribution manifolds 670, 671, 678.S1, 664 and 665 series.
**With auxiliary microswitch**.
PATENT

Ambient temperature range: 0–50 °C
Protection class: IP 40
Supply cable length: 0,8 m
Auxiliary microswitch contact rating (230 V): 0,8 A
Starting current: ≤ 1 A

CE

| Code | Electric supply | | |
|---|---|---|---|
| **6563**12 | 230 V AC | 1 | 10 |
| **6563**14 | 24 V AC/DC | 1 | 10 |



### 6563

Thermo-electric actuator **with manual opening and position indicator**.
Normally closed.
For valves 338, 339, 401, 402, 425, 426, 421, 422, 455, 456, 220, 221, 222, 223, 224, 225, 226, 227, 230, 231, 232, 233, 234, 237, 676, 677, 678 series and distribution manifolds 670, 671, 678.S1, 664 and 665 series.
PATENT

Ambient temperature range: 0–50 °C
Protection class: IP 40
Supply cable length: 0,8 m
Starting current: ≤ 1 A

CE

| Code | Electric supply | | |
|---|---|---|---|
| **6563**02 | 230 V AC | 1 | 10 |
| **6563**04 | 24 V AC/DC | 1 | 10 |



### 6563

Thermo-electric actuator **with low power consumption, with auxiliary microswitch**.
**With opening position indicator**.
Normally closed.
**With auxiliary microswitch**.
PATENT

Ambient temperature range: 0–50 °C
Running power consumption: 3 W
Protection class: IP 40
Supply cable length: 0,8 m
Starting current: ≤ 250 mA

CE

| Code | Notes | Electric supply | | |
|---|---|---|---|---|
| **6563**54 | - | 24 V AC/DC | 1 | 10 |
| **6563**44 | without auxiliary microswitch | 24 V AC/DC | 1 | 10 |

## Thermo-electric actuator - push fit connection



### 6562

Thermo-electric actuator.
**With opening position indicator**.
Normally closed.
Quick coupling installation, with a clip adapter.
For valves 338, 339, 401, 402, 425, 426, 421, 422, 455, 456, 220, 221, 222, 223, 224, 225, 226, 227, 230, 231, 232, 233, 234, 237, 676, 677, 678 series and manifolds 670, 671, 668. S1,664, 665 series.

Ambient temperature range: 0–50 °C
Protection class: IP 54
Supply cable length: 0,8 m
Starting current: ≤ 1 A

CE

| Code | Electric supply | | |
|---|---|---|---|
| **656202** | 230 V AC | 1 | 10 |
| **656204** | 24 V AC/DC | 1 | 10 |



### 6562

Thermo-electric actuator **with opening position indicator**.
Normally closed.
Quick coupling installation, with a clip adapter.
For valves 338, 339, 401, 402, 425, 426, 421, 422, 455, 456, 220, 221, 222, 223, 224, 225, 226, 227, 230, 231, 232, 233, 234, 237, 676, 677, 678 series and manifolds 670, 671, 668. S1,664, 665 series.
**With auxiliary microswitch**.

Ambient temperature range: 0–50 °C
Protection class: IP 54
Supply cable length: 0,8 m
Auxiliary microswitch contact rating (230 V): 0,8 A
Starting current: ≤ 1 A

CE

| Code | Electric supply | | |
|---|---|---|---|
| **656212** | 230 V AC | 1 | 10 |
| **656214** | 24 V AC/DC | 1 | 10 |



### 6564

Thermo-electric actuator **with low power consumption**.
**With opening position indicator.**
Normally closed.
Quick coupling installation, with a clip adapter.
For valves 338, 339, 401, 402, 425, 426, 421, 422, 455, 456, 220, 221, 222, 223, 224, 225, 226, 227, 230, 231, 232, 233, 234, 237, 676, 677, 678 series and manifolds 670, 671, 668. S1,664, 665 series.

Ambient temperature range: 0–50 °C
Protection class: IP 54
Supply cable length: 0,8 m
Starting current: ≤ 250 mA

CE

| Code | Electric supply | | |
|---|---|---|---|
| **656402** | 230 V AC | 1 | 10 |
| **656404** | 24 V AC/DC | 1 | 10 |



### 6564

Thermo-electric actuator **with low power consumption, with auxiliary microswitch**.
**With opening position indicator**.
Normally closed.
Quick coupling installation, with a clip adapter.
For valves 338, 339, 401, 402, 425, 426, 421, 422, 455, 456, 220, 221, 222, 223, 224, 225, 226, 227, 230, 231, 232, 233, 234, 237, 676, 677, 678 series and manifolds 670, 671, 668. S1,664, 665 series.
**With auxiliary microswitch**.

Ambient temperature range: 0–50 °C
Protection class: IP 54
Supply cable length: 0,8 m
Auxiliary microswitch contact rating (230 V): 0,8 A
Starting current: ≤ 250 (230 V) mA

CE

| Code | Electric supply | | |
|---|---|---|---|
| **656412** | 230 V AC | 1 | 10 |
| **656414** | 24 V AC/DC | 1 | 10 |

## Control bar



### 6205

Control bar.
Timer switch input.
Pump outlet control.
SUMMER - WINTER switch input.

Electric supply: 230 V AC
Running power consumption: 5,5 VA
Protection class: IP 30 (with rubber cable gland)
Contact rating on switch-over: 10 A

CE

| Code | Notes | | |
|---|---|---|---|
| **620542** | 4 channels | 1 | 8 |
| **620582** | 8 channels | 1 | 8 |

# INSPECTION WALL BOXES AND WALL PORTS

## Boxes for distribution manifolds from 110 to 140 mm



### 659

Inspection wall box with adjustable depth (110-140 mm).
Closure with a push-fit clamp.
Wall or floor installations (with 660 series).
For distribution manifolds 349, 350, 592, 662, 663, 668.S1, 671, 664 and 665 series.

Material: painted metal sheet

| Code | Height (mm) | Width (mm) | Depth (mm) | | |
|---|---|---|---|---|---|
| **659**044 | 500 | 400 | 110–140 | 1 | - |
| **659**064 | 500 | 600 | 110–140 | 1 | - |
| **659**084 | 500 | 800 | 110–140 | 1 | - |
| **659**104 | 500 | 1000 | 110–140 | 1 | - |
| **659**124 | 500 | 1200 | 110–140 | 1 | - |



### 659

Inspection wall port with frame.

Material: painted metal sheet

| Code | Article use | | |
|---|---|---|---|
| **659**304 | 659044 | 1 | - |
| **659**306 | 659064 | 1 | - |
| **659**308 | 659084 | 1 | - |
| **659**310 | 659104 | 1 | - |
| **659**312 | 659124 | 1 | - |

## Boxes for distribution manifolds from 80 to 120 mm



### 659

Inspection wall box with adjustable depth (80-120 mm).
Complete with specific support for manifold brackets.
Closure with a push-fit clamp.
For distribution manifolds 349, 350, 592, 662, 671, 664 and 665 series.

Material: painted metal sheet

| Code | Height (mm) | Width (mm) | Depth (mm) | | |
|---|---|---|---|---|---|
| **659**045 | 500 | 400 | 80–120 | 1 | - |
| **659**065 | 500 | 600 | 80–120 | 1 | - |
| **659**085 | 500 | 800 | 80–120 | 1 | - |
| **659**105 | 500 | 1000 | 80–120 | 1 | - |



### 659

Inspection wall port with frame.

Material: painted metal sheet

| Code | Article use | | |
|---|---|---|---|
| **659**504 | 659045 | 1 | - |
| **659**506 | 659065 | 1 | - |
| **659**508 | 659085 | 1 | - |
| **659**510 | 659105 | 1 | - |

## Boxes for distribution manifolds from 110 to 150 mm



### 661

Adjustable depth box for manifolds 662, 671 and 668.S1, 664 and 665 series and regulating units 182 series.
Complete with supports for floor installation.
Closure with a push-fit clamp.

Material: painted metal sheet

| Code | Height (mm) | Width (mm) | Depth (mm) | | |
|---|---|---|---|---|---|
| **661**045 | 500 | 400 | 110–150 | 1 | - |
| **661**065 | 500 | 600 | 110–150 | 1 | - |
| **661**085 | 500 | 800 | 110–150 | 1 | - |
| **661**105 | 500 | 1000 | 110–150 | 1 | - |
| **661**125 | 500 | 1200 | 110–150 | 1 | - |

# COMPONENTS FOR DOMESTIC WATER SYSTEM

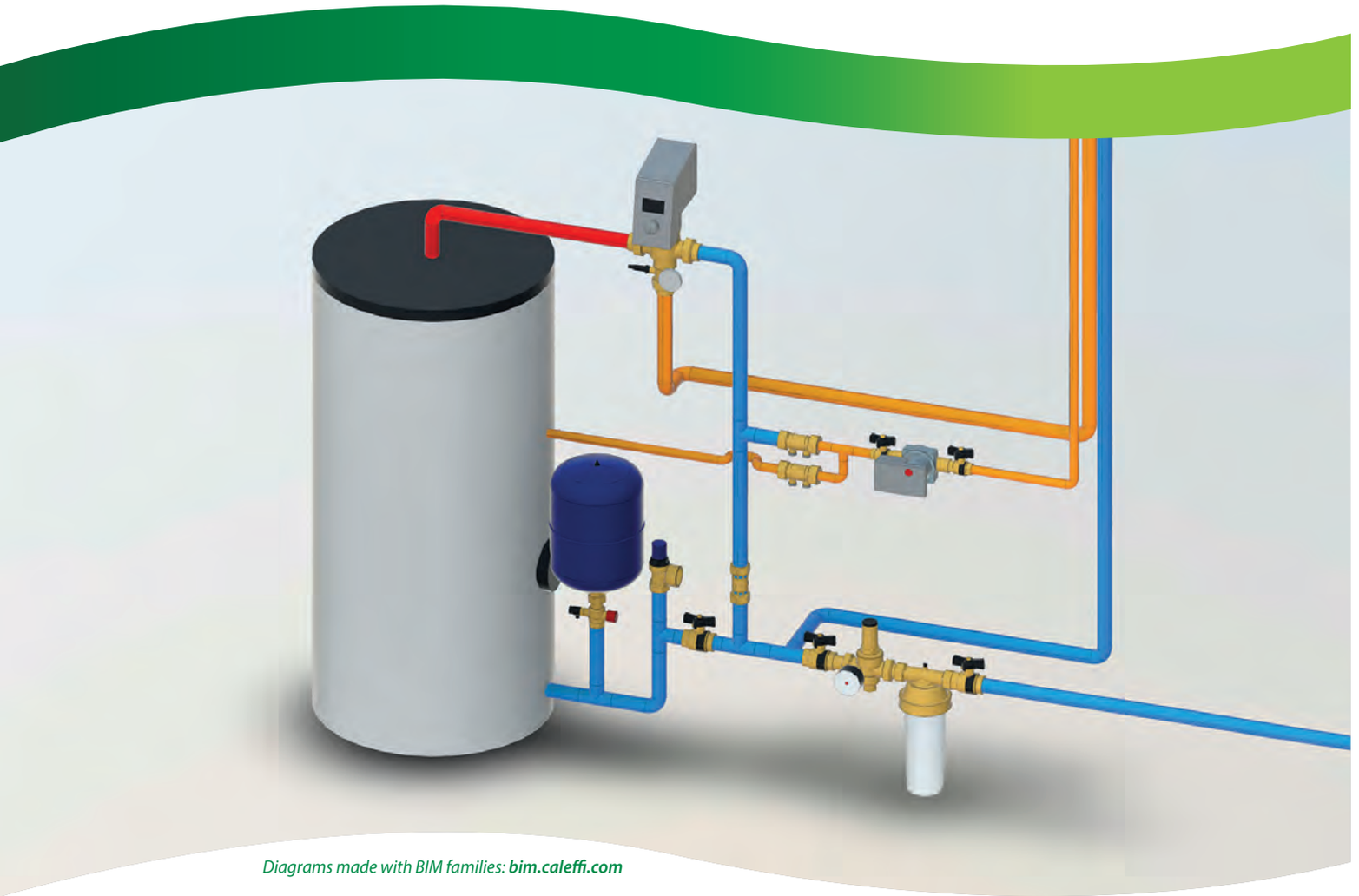

*Diagrams made with BIM families:* ***bim.caleffi.com***



**Pressure reducing valves**
**Thermostatic mixing valves**
**Electronic mixing valves**
**Thermostatic regulator for domestic hot water recirculation circuits**
**Manifolds for domestic water systems**
**Safety groups for domestic water systems**
**Safety relief valves for domestic water systems**
**Control devices for domestic water systems**
**Check valves**

# COMPONENTS FOR DOMESTIC WATER SYSTEMS

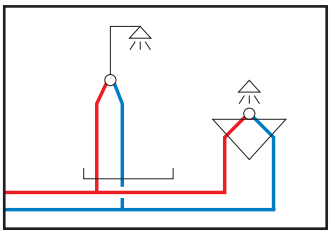

Modern domestic cold and hot water distribution systems need special protective and control devices, which are chosen according to the intended use and security level to be guaranteed for the utilities. Depending on the application type, for example home, commercial or public use, different rules are used to dimension systems, and they are fitted with different equipment. Below we describe the most important device classifications to help make the right choice.

## Pressure adjustment

**- Pressure reducing valves**

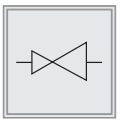
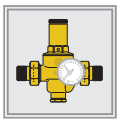

## Temperature adjustment

**- Thermostatic and electronic mixing valves**

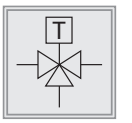
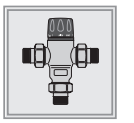

## Flow rate adjustment

**- Thermostatic regulator for recirculation circuits**

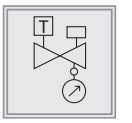


## Cold and hot water distribution

**- Distribution manifolds**

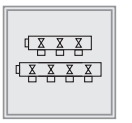
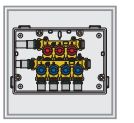

## Safety and protection of hot water storage

**- Anti-scale device - Safety groups - Safety valves - Expansion vessels**

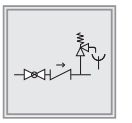
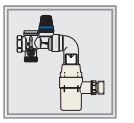

## Water hammer phenomenon

**- Water hammer arrester**

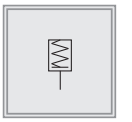
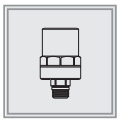

## Antifreeze protection

**- Shut-off cock with antifreeze safety device**

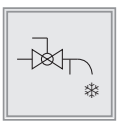
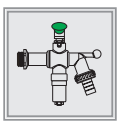

## Shut off medium

**- Ball valves with built-in check valve**

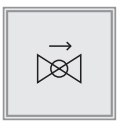


# PRESSURE REDUCING VALVES

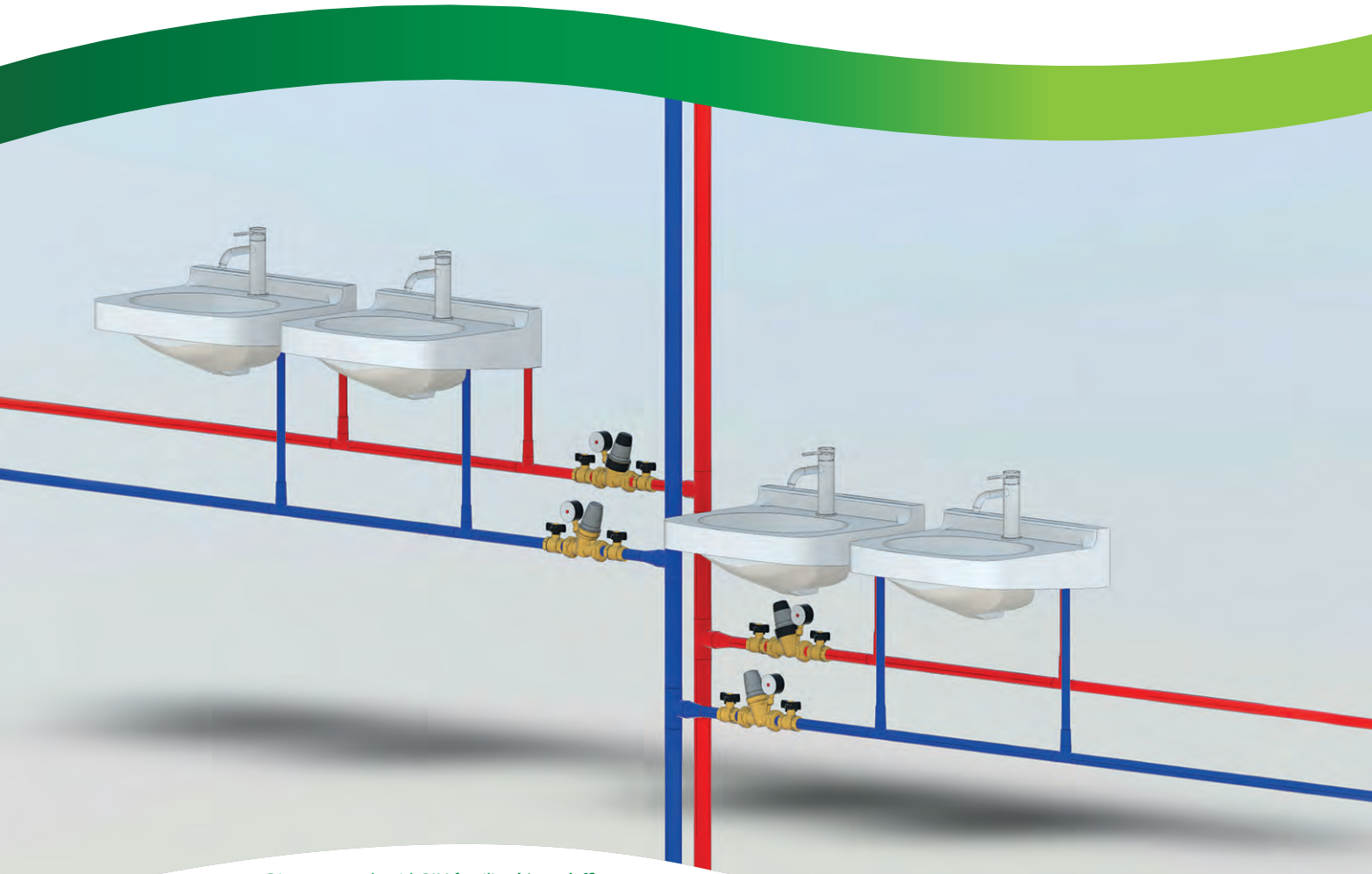

*Diagrams made with BIM families:* ***bim.caleffi.com***

**Micro pressure reducing valves**
**Compact pressure reducing valves**
**Compact pressure reducing valves for high temperature**
**Pre-adjustable pressure reducing valves**
**Pre-adjustable pressure reducing valves for high temperature**
**Standard pressure reducing valves for high temperature**
**Spare parts for pressure reducing valves**
**Pressure reducing valves for first stage control**
**Pressure reducing valves for high-rise building**
**Pressure reducing and stabilising valves**
**Combined group for pressure control**
**Combined group for pressure and temperature control**
**Accessories for combined group for pressure control**

**Domestic Water Sizer**
**DOMESTIC WATER SYSTEM SIZER ALSO FOR SMARTPHONE**
**Available on www.caleffi.com and app for smartphone.**
**Download the version for your iOS and Android® mobile phone.**

# PRESSURE REDUCING VALVES

## Micro pressure reducing valves



### 533...H

Inclined micro pressure reducing valve **for special applications: for dispensing water, beverages and coffee machines**.
Replaceable cartridge and strainer.
**Certified to EN 1567**.
PATENT PENDING

Maximum upstream pressure: 16 bar
Adjustment pressure range: 0,8–4 bar
Maximum recommended flow rate: 6 l/min
Medium temperature range: 2–80 °C
Material: dezincification resistant brass DR "low lead"

| Code | Connection | Notes | | |
|---|---|---|---|---|
| 533230H | 3/8" F | with pressure gauge 0–10 bar | 1 | 20 |
| 533430H | 3/8" F | - | 1 | 20 |



Pressure gauge for 533H series inclined micro pressure reducing valves for special applications.

Pressure gauge scale: 0–10 bar

| Code | Connection | | |
|---|---|---|---|
| F0002665 | 1/4" M radial connection | 1 | - |

## Compact pressure reducing valves



### 5330

Inclined pressure reducing valve.
Replaceable cartridge and strainer.

Maximum upstream pressure: 16 bar
Adjustment pressure range: 1–6 bar
Medium temperature range: 2–40 °C
Material: brass
Finish: nickel plated

| Code | Connection | | |
|---|---|---|---|
| **5330**41 | 1/2" F | 1 | 20 |
| **5330**51 | 3/4" F | 1 | 20 |



### 5331

Inclined pressure reducing valve for safety group.
Replaceable cartridge and strainer.

Maximum upstream pressure: 16 bar
Adjustment pressure range: 1–6 bar
Medium temperature range: 2–40 °C
Material: brass
Finish: nickel plated

| Code | Connection 1 | Connection 2 | | |
|---|---|---|---|---|
| **5331**51 | 3/4" M | 3/4" F captive nut | 1 | 25 |



### 5332

Inclined pressure reducing valve, with 0–10 bar pressure gauge.
Replaceable cartridge and strainer.

Maximum upstream pressure: 16 bar
Adjustment pressure range: 1–6 bar
Medium temperature range: 2–40 °C
Material: brass
Finish: nickel plated

| Code | Connection | | |
|---|---|---|---|
| **5332**41 | 1/2" F | 1 | 20 |
| **5332**51 | 3/4" F | 1 | 20 |



## 5334

Inclined pressure reducing valve, with pressure gauge connection.
Replaceable cartridge and strainer.
With 1/4" F pressure gauge connection.

Maximum upstream pressure: 16 bar
Adjustment pressure range: 1–6 bar
Medium temperature range: 2–40 °C
Material: brass
Finish: nickel plated

| Code | Connection | | |
|---|---|---|---|
| **5334**41 | 1/2" F | 1 | 20 |
| **5334**51 | 3/4" F | 1 | 20 |
| **5334**61 | 1" F | 1 | 25 |



## 5338

Inclined pressure reducing valve with compression ends.
Replaceable cartridge and strainer.
With pressure gauge: 0–10 bar.

Maximum upstream pressure: 16 bar
Medium temperature range: 2–40 °C
Adjustment pressure range: 1–6 bar
Material: dezincification resistant brass DR
Finish: nickel plated

| Code | Connection | | |
|---|---|---|---|
| **5338**41 | Ø 15 | 1 | 20 |
| **5338**51 | Ø 22 | 1 | 20 |



## 5336

Inclined pressure reducing valve with compression ends.
Replaceable cartridge and strainer.

Maximum upstream pressure: 16 bar
Medium temperature range: 2–40 °C
Adjustment pressure range: 1–6 bar
Material: dezincification resistant brass DR
Finish: nickel plated

| Code | Connection | | |
|---|---|---|---|
| **5336**41 | Ø 15 | 1 | 25 |
| **5336**51 | Ø 22 | 1 | 25 |



## 5339

Inclined pressure reducing valve with compression ends and built-in safety relief valve.
Replaceable cartridge and strainer.
Pressure reducing valve.
Safety relief valve.
**With stainless steel seat**.

Maximum upstream pressure: 1600 kPa
Medium temperature range: 2–40 °C
Adjustment pressure range: 100–600 kPa
Material: dezincification resistant brass DR

SANS 198

| Code | Connection | | |
|---|---|---|---|
| **5339**44 | Ø 15 | 1 | 25 |
| **5339**54 | Ø 22 | 1 | 25 |



## 5337

Inclined pressure reducing valve with compression ends.
Replaceable cartridge and strainer.
With 1/4" F pressure gauge connection.

Maximum upstream pressure: 16 bar
Medium temperature range: 2–40 °C
Adjustment pressure range: 1–6 bar
Material: dezincification resistant brass DR
Finish: nickel plated

| Code | Connection | | |
|---|---|---|---|
| **5337**41 | Ø 15 | 1 | 20 |
| **5337**51 | Ø 22 | 1 | 20 |

# Compact pressure reducing valves for high temperature



## 5330..H

Inclined pressure reducing valve.
Replaceable cartridge and strainer.
For high temperature.
**Certified to EN 1567**.

Maximum upstream pressure: 16 bar
Medium temperature range: 2–80 °C
Adjustment pressure range: 1–5,5 bar
Material: brass
Finish: nickel plated

| Code | Connection | | |
|---|---|---|---|
| 533041H | 1/2″F | 1 | 20 |
| 533051H | 3/4″F | 1 | 20 |



## 5331..H

Inclined pressure reducing valve for safety group.
Replaceable cartridge and strainer.
For high temperature.
**Certified to EN 1567**.

Maximum upstream pressure: 16 bar
Medium temperature range: 2–80 °C
Adjustment pressure range: 1–5,5 bar
Material: dezincification resistant brass DR

| Code | Inlet connection | Outlet connection | | |
|---|---|---|---|---|
| 533159H | Ø 22 | 3/4″F captive nut | 1 | 30 |



## 5332..H

Inclined pressure reducing valve.
Replaceable cartridge and strainer.
For high temperature.
With pressure gauge: 0–10 bar.
**Certified to EN 1567**.

Maximum upstream pressure: 16 bar
Medium temperature range: 2–80 °C
Adjustment pressure range: 1–5,5 bar
Material: brass
Finish: nickel plated

| Code | Connection | | |
|---|---|---|---|
| 533241H | 1/2″F | 1 | 20 |
| 533251H | 3/4″F | 1 | 20 |



## 5334..H

Inclined pressure reducing valve.
Replaceable cartridge and strainer.
For high temperature.
With 1/4″F pressure gauge connection.
**Certified to EN 1567**.

Maximum upstream pressure: 16 bar
Medium temperature range: 2–80 °C
Adjustment pressure range: 1–5,5 bar
Material: brass
Finish: nickel plated

| Code | Connection | | |
|---|---|---|---|
| 533441H | 1/2″F | 1 | 20 |
| 533451H | 3/4″F | 1 | 20 |
| 533461H | 1″F | 1 | 25 |



## 5332..H

Inclined pressure reducing valve.
Replaceable cartridge and strainer.
For high temperature.
With pressure gauge: 0–10 bar.
**Certified to EN 1567**.

Maximum upstream pressure: 16 bar
Medium temperature range: 2–80 °C
Adjustment pressure range: 1–5,5 bar
Material: dezincification resistant brass DR
Finish: nickel plated

| Code | Connection | | |
|---|---|---|---|
| 533241H LTC | 1/2″F | 1 | 20 |
| 533251H LTC | 3/4″F | 1 | 20 |



## 5334..H

Inclined pressure reducing valve.
Replaceable cartridge and strainer.
For high temperature.
With 1/4″F pressure gauge connection.
**Certified to EN 1567**.

Maximum upstream pressure: 16 bar
Medium temperature range: 2–80 °C
Adjustment pressure range: 1–5,5 bar
Material: dezincification resistant brass DR
Finish: nickel plated

| Code | Connection | | |
|---|---|---|---|
| 533441H LTC | 1/2″F | 1 | 20 |
| 533451H LTC | 3/4″F | 1 | 20 |
| 533461H LTC | 1″F | 1 | 25 |



## 5337..H

Inclined pressure reducing valve with compression ends.
Replaceable cartridge and strainer.
For high temperature.
With 1/4" F pressure gauge connection.
**Certified to EN 1567**.

Maximum upstream pressure: 16 bar
Medium temperature range: 2–80 °C
Adjustment pressure range: 1–5,5 bar
Material: dezincification resistant brass DR
Finish: nickel plated

| Code | Connection | | |
|---|---|---|---|
| 533741H | Ø 15 | 1 | 20 |
| 533751H | Ø 22 | 1 | 20 |
| 533761H | Ø 28 | 1 | 20 |



## 5338..H

Inclined pressure reducing valve with compression ends.
Replaceable cartridge and strainer.
For high temperature.
With pressure gauge: 0–10 bar.
**Certified to EN 1567**.

Maximum upstream pressure: 16 bar
Medium temperature range: 2–80 °C
Adjustment pressure range: 1–5,5 bar
Material: dezincification resistant brass DR
Finish: nickel plated

| Code | Connection | | |
|---|---|---|---|
| 533841H | Ø 15 | 1 | 20 |
| 533851H | Ø 22 | 1 | 20 |
| 533861H | Ø 28 | 1 | 20 |



## 5336..H

Inclined pressure reducing valve with compression ends.
Replaceable cartridge and strainer.
For high temperature.
**Certified to EN 1567**.

Maximum upstream pressure: 16 bar
Medium temperature range: 2–80 °C
Adjustment pressure range: 1–5,5 bar
Material: dezincification resistant brass DR
Finish: nickel plated

| Code | Connection | | |
|---|---|---|---|
| 533641H | Ø 15 | 1 | 25 |
| 533651H | Ø 22 | 1 | 25 |



## 5335..H

Inclined pressure reducing valve.
Replaceable cartridge and strainer.
With 1/4" F pressure gauge connection.

Maximum upstream pressure: 2000 kPa
Medium temperature range: 2–80 °C
Adjustment pressure range: 1–6 bar
Material: dezincification resistant brass DR "low lead"

Lead Free
AS 1357.2
WMKA02467

| Code | Connection | | |
|---|---|---|---|
| 533545H AUS | Rp 1/2"F | 1 | 25 |
| 533555H AUS | Rp 3/4"F | 1 | 25 |
| 533565H AUS | Rp 1"F | 1 | 10 |



## 5335..H

Three-way inclined pressure reducing valve.
Replaceable cartridge and strainer.
Replaceable connectors, with plug.

Maximum upstream pressure: 2000 kPa
Medium temperature range: 2–80 °C
Adjustment pressure range: 1–6 bar
Material: dezincification resistant brass DR "low lead"

Lead Free
AS 1357.2
WMKA02467

| Code | Connection | | |
|---|---|---|---|
| 533550H AUS | Rp 3/4"F | 1 | 30 |



## 5335..H

Two-way inclined pressure reducing valve.
Replaceable cartridge and strainer.

Maximum upstream pressure: 2000 kPa
Medium temperature range: 2–80 °C
Pressure setting: 5 bar
Material: dezincification resistant brass DR "low lead"

Lead Free
AS 1357.2
WMKA02467

| Code | Connection | | |
|---|---|---|---|
| 533551H AUS | Rp 3/4"F | 1 | 20 |

## Pre-adjustable pressure reducing valves



### 5350

Pressure reducing valve with self-contained replaceable cartridge.
Male union connections.
With pressure regulating scale for manual pressure adjustment.
**Certified to EN 1567**.
PATENT

Maximum upstream pressure: 25 bar
Adjustment pressure range: 1–6 bar
Medium temperature range: 2–40 °C
Material: dezincification resistant brass DR

| Code | Connection | Notes | | |
|---|---|---|---|---|
| **535040** | 1/2" M | with 1/4" F pressure gauge connection | 1 | 5 |
| **535050** | 3/4" M | with 1/4" F pressure gauge connection | 1 | 5 |
| **535060** | 1" M | with 1/4" F pressure gauge connection | 1 | 5 |
| **535074** | 1 1/4" M | with 1/4" F pressure gauge connection | 1 | 5 |
| **535070** | 1 1/4" M | with 1/4" F pressure gauge connection | 1 | 4 |
| **535080** | 1 1/2" M | with 1/4" F pressure gauge connection | 1 | 4 |
| **535090** | 2" M | with 1/4" F pressure gauge connection | 1 | 4 |
| **535041** | 1/2" M | with pressure gauge 0–10 bar | 1 | 5 |
| **535051** | 3/4" M | with pressure gauge 0–10 bar | 1 | 5 |
| **535061** | 1" M | with pressure gauge 0–10 bar | 1 | 5 |
| **535075** | 1 1/4" M | with pressure gauge 0–10 bar | 1 | 5 |
| **535071** | 1 1/4" M | with pressure gauge 0–10 bar | 1 | 4 |
| **535081** | 1 1/2" M | with pressure gauge 0–10 bar | 1 | 4 |
| **535091** | 2" M | with pressure gauge 0–10 bar | 1 | 4 |

535074, 535075 (1 1/4" M) complete with 1" cartridge. Not DVGW certified.



### 5351

Pressure reducing valve with self-contained replaceable cartridge.
Male union connections.
With pressure regulating scale for manual pressure adjustment.
Stainless steel strainer cartridge with transparent container.
Complete with spare strainer and key for removing the strainer and cartridge.
**Certified to EN 1567**.

Maximum upstream pressure: 25 bar
Adjustment pressure range: 1–6 bar
Medium temperature range: 2–40 °C
Strainer mesh size Ø: 0,28 mm
Material: brass

| Code | Connection | Notes | | |
|---|---|---|---|---|
| **535140** | 1/2" M | with 1/4" F pressure gauge connection | 1 | 5 |
| **535150** | 3/4" M | with 1/4" F pressure gauge connection | 1 | 5 |
| **535160** | 1" M | with 1/4" F pressure gauge connection | 1 | 5 |
| **535141** | 1/2" M | with stainless steel pressure gauge 0–10 bar | 1 | 5 |
| **535151** | 3/4" M | with stainless steel pressure gauge 0–10 bar | 1 | 5 |
| **535161** | 1" M | with stainless steel pressure gauge 0–10 bar | 1 | 5 |



### 5350

Pressure reducing valve with self-contained replaceable cartridge.
With pressure regulating scale for manual pressure adjustment.

Maximum upstream pressure: 25 bar
Medium temperature range: 2–40 °C
Adjustment pressure range: 1–6 bar
Material: dezincification resistant brass DR

| Code | Connection | Notes | | |
|---|---|---|---|---|
| **535022** | Ø 22 | with 1/4" F pressure gauge connection | 1 | 10 |

# Pre-adjustable pressure reducing valves for high temperature



## 5350..H

Pressure reducing valve with self-contained replaceable cartridge.
Male union connections.
With pressure regulating scale for manual pressure adjustment.
**Certified to EN 1567**.

Maximum upstream pressure: 25 bar
Medium temperature range: 2–80 °C
Adjustment pressure range: 1–6 bar
Material: dezincification resistant brass DR "low lead"

| Code | Connection | Notes | | |
|---|---|---|---|---|
| 535040H | 1/2" M | with 1/4" F pressure gauge connection | 1 | 5 |
| 535050H | 3/4" M | with 1/4" F pressure gauge connection | 1 | 5 |
| 535060H | 1" M | with 1/4" F pressure gauge connection | 1 | 5 |
| 535070H | 1 1/4" M | with 1/4" F pressure gauge connection | 1 | 4 |
| 535080H | 1 1/2" M | with 1/4" F pressure gauge connection | 1 | 4 |
| 535090H | 2" M | with 1/4" F pressure gauge connection | 1 | 4 |
| 535041H | 1/2" M | with pressure gauge, 0–10 bar | 1 | 5 |
| 535051H | 3/4" M | with pressure gauge, 0–10 bar | 1 | 5 |
| 535061H | 1" M | with pressure gauge, 0–10 bar | 1 | 5 |
| 535071H | 1 1/4" M | with pressure gauge, 0–10 bar | 1 | 4 |
| 535081H | 1 1/2" M | with pressure gauge, 0–10 bar | 1 | 4 |
| 535091H | 2" M | with pressure gauge, 0–10 bar | 1 | 4 |



## 5350..H

Pressure reducing valve with self-contained replaceable cartridge.
For high temperature.
With pressure regulating scale for manual pressure adjustment.
With 1/4" F pressure gauge connection.
**Certified to EN 1567**.

Maximum upstream pressure: 16 bar
Medium temperature range: 2–80 °C
Adjustment pressure range: 1–6 bar
Material: dezincification resistant brass DR "low lead"

| Code | Connection | | |
|---|---|---|---|
| 535015H | Ø 15 | 1 | 5 |
| 535022H | Ø 22 | 1 | 5 |
| 535028H | Ø 28 | 1 | 5 |



## 5350..H

Pressure reducing valve with self-contained replaceable cartridge.
For high temperature.
Male union connections.
With pressure regulating scale for manual pressure adjustment.
With 1/4" F pressure gauge connection.

Maximum upstream pressure: 2000 kPa
Medium temperature range: 2–80 °C
Adjustment pressure range: 1–6 bar
Material: dezincification resistant brass DR "low lead"

Lead Free
AS 1357.2
WM - 040162

| Code | Connection | | |
|---|---|---|---|
| 535040H AUS | 1/2" M | 1 | 5 |
| 535050H AUS | 3/4" M | 1 | 5 |
| 535060H AUS | 1" M | 1 | 5 |
| 535070H AUS | 1 1/4" M | 1 | 4 |
| 535080H AUS | 1 1/2" M | 1 | 4 |
| 535090H AUS | 2" M | 1 | 4 |

# Standard pressure reducing valves for high temperature



## 5360

Pressure reducing valve with replaceable cartridge and male union connections.
**Performance according to EN 1567**.

Maximum upstream pressure: 25 bar
Adjustment pressure range: 0,5–6 bar
Medium temperature range: 2–80 °C
Material: dezincification resistant brass DR

WRAS APPROVED PRODUCT CERTIFICATION MARK

| Code | Connection | Notes | | |
|---|---|---|---|---|
| **536040** | 1/2" M | with 1/4" F pressure gauge connection | 1 | 5 |
| **536050** | 3/4" M | with 1/4" F pressure gauge connection | 1 | 5 |
| **536060** | 1" M | with 1/4" F pressure gauge connection | 1 | 5 |
| **536070** | 1 1/4" M | with 1/4" F pressure gauge connection | 1 | 4 |
| **536080** | 1 1/2" M | with 1/4" F pressure gauge connection | 1 | 4 |
| **536041** | 1/2" M | with pressure gauge 0–10 bar | 1 | 5 |
| **536051** | 3/4" M | with pressure gauge 0–10 bar | 1 | 5 |
| **536061** | 1" M | with pressure gauge 0–10 bar | 1 | 5 |
| **536071** | 1 1/4" M | with pressure gauge 0–10 bar | 1 | 4 |
| **536081** | 1 1/2" M | with pressure gauge 0–10 bar | 1 | 4 |



## 5362

Pressure reducing valve with replaceable cartridge.

Maximum upstream pressure: 25 bar
Adjustment pressure range: 0,5–6 bar
Medium temperature range: 2–80 °C
Material: dezincification resistant brass DR

WRAS APPROVED PRODUCT CERTIFICATION MARK

| Code | Connection | Notes | | |
|---|---|---|---|---|
| **536240** | 1/2" F | with 1/4" F pressure gauge connection | 1 | 5 |
| **536250** | 3/4" F | with 1/4" F pressure gauge connection | 1 | 5 |
| **536260** | 1" F | with 1/4" F pressure gauge connection | 1 | 5 |
| **536241** | 1/2" F | with pressure gauge 0–10 bar | 1 | 5 |
| **536251** | 3/4" F | with pressure gauge 0–10 bar | 1 | 5 |
| **536261** | 1" F | with pressure gauge 0–10 bar | 1 | 5 |



## 5365

Pressure reducing valve with replaceable cartridge and male union connections.
With stainless steel double pressure gauge in glycerine bath:
- 0–25 bar upstream;
- 0–10 bar downstream.
**Performance according to EN 1567**.

Maximum upstream pressure: 25 bar
Adjustment pressure range: 0,5–6 bar
Medium temperature range: 2–80 °C
Material: bronze

WRAS APPROVED PRODUCT CERTIFICATION MARK

| Code | Connection | Notes | | |
|---|---|---|---|---|
| **536580** | 1 1/2" M | with 1/4" F double pressure gauge connection | 1 | - |
| **536590** | 2" M | with 1/4" F double pressure gauge connection | 1 | - |
| **536581** | 1 1/2" M | with double pressure gauge in glycerine bath | 1 | - |
| **536591** | 2" M | with double pressure gauge in glycerine bath | 1 | - |



## 5366

Pressure reducing valve with replaceable cartridge and flanged connections, PN 16.
To be coupled with flat counterflanges EN 1092-1.
With stainless steel double pressure gauge in glycerine bath:
- 0–25 bar upstream;
- 0–10 bar downstream.

Maximum upstream pressure: 16 bar
Adjustment pressure range: 0,5–6 bar
Medium temperature range: 2–80 °C
Material: bronze

WRAS APPROVED PRODUCT CERTIFICATION MARK

| Code | Connection | | |
|---|---|---|---|
| **536660** | DN 65 - PN 16 | 1 | - |



## 539

Pressure reducing valve.
Complete with two 3/4" x 1/2" fittings.
With double 1/4" F pressure gauge connection.
**Certified to EN 1567**.

Maximum upstream pressure: 25 bar
Adjustment pressure range: 1–5,5 bar
Medium temperature range: 2–80 °C
Material: dezincification resistant brass DR

ATTESTATION DE CONFORMITE SANITAIRE ACS NF

| Code | Connection | | |
|---|---|---|---|
| **539250** | 3/4" M | 1 | 5 |



## 537

Soldering union connections.

| Code | Inlet connection | Outlet connection | | |
|---|---|---|---|---|
| **537**015 | 3/4" F | Ø 15 | 1 | - |
| **537**022 | 1" F | Ø 22 | 1 | 50 |
| **537**028 | 1 1/4" F | Ø 28 | 1 | 50 |
| **537**035 | 1 1/2" F | Ø 35 | 1 | 50 |

## Spare parts for pressure reducing valves



## 5330

Spare cartridge.
For reducers 5330, 5331, 5332 and 5334 series.

| Code | | |
|---|---|---|
| **5330**00 | 1 | 100 |



## 5330..H

Spare cartridge.
Inclined pressure reducing valve 5330H, 5331H, 5332H, 5334H, 5335H, 5336H, 5337H,5338H and 5339H series.

| Code | | |
|---|---|---|
| 533000H | 1 | 100 |



## 5350

Spare cartridge.
For 5350 and 5351 series reducing valves.

| Code | Notes | | |
|---|---|---|---|
| **5350**04 | 1/2" - 3/4" | 1 | 8 |
| **5350**06 | 1" | 1 | 8 |
| **5350**17 | 1 1/4" (535074 - 535075) | 1 | 8 |
| **5350**07 | 1 1/4" - 1 1/2" - 2" | 1 | - |



## 5350..H

Spare cartridge and key to service strainer and cartridge.
For 5350H reducers.

| Code | Notes | | |
|---|---|---|---|
| 535006H | 1/2" - 3/4" - 1" | 1 | 8 |
| 535009H | 1 1/4" - 1 1/2" - 2" | 1 | - |



Key to service strainer and cartridge.
For pressure reducing valves 5350 and 5351 series.

| Code | Notes | | |
|---|---|---|---|
| R52484 | for 1/2", 3/4", 1" | 1 | - |



## 5360

Spare cartridge for pressure reducing valves 5360, 5362, 5365 and 5366 series.

| Code | Notes | | |
|---|---|---|---|
| **5360**04 | 1/2" | 1 | - |
| **5360**05 | 3/4" - 1" | 1 | - |
| **5360**27 | 1 1/4" - 1 1/2" (5360) | 1 | - |
| **5360**08 | 1 1/2" (5365) - 2" - DN 65 | 1 | - |

## Pressure reducing valves for first stage control



### 5360

Pressure reducing valve **for first stage control**, with replaceable cartridge.
**Piston operation**.
Male union connections.
With pressure gauge: 0–2500 kPa.

Maximum upstream pressure: 2500 kPa
Medium temperature range: 2–80 °C
Adjustment pressure range: 600–1000 kPa
Material: dezincification resistant brass DR "low lead"

Lead Free AS 1357.2 WM - 040299
WRAS APPROVED PRODUCT CERTIFICATION MARK

| Code | Connection | | |
|---|---|---|---|
| **5360**43 AUS | 1/2" M | 1 | 5 |
| **5360**53 AUS | 3/4" M | 1 | 5 |
| **5360**63 AUS | 1" M | 1 | 5 |
| **5360**73 AUS | 1 1/4" M | 1 | 4 |
| **5360**83 AUS | 1 1/2" M | 1 | 4 |

## Pressure reducing valves for high-rise building



Pb LOW LEAD

### 5335..HS

Inclined pressure reducing valve.
Replaceable cartridge and strainer.
For applications with higher pressure reduction ratio in hot and cold water distribution system.

Maximum upstream pressure: 2000 kPa
Medium temperature range: 2–80 °C
Adjustment pressure range: 1–6 bar
Material: dezincification resistant brass DR "low lead"

Lead Free AS 1357.2 WMKA02467

| Code | Connection | | |
|---|---|---|---|
| 533545HS AUS | Rp 1/2" F | 1 | 25 |
| 533555HS AUS | Rp 3/4" F | 1 | 25 |

## Pressure reducing and stabilising valves



### 576

Pressure reducing valve.
To be coupled with flat counterflanges EN 1092-1.
Complete with two pressure gauges.

Adjustment pressure range: 2–14 bar
Medium temperature range: 1–60 °C
Material: cast iron

ATTESTATION DE CONFORMITÉ SANITAIRE ACS

| Code | Connection | Maximum upstream pressure (bar) | | |
|---|---|---|---|---|
| **576**062 | DN 65 - PN 16 | 16 | 1 | - |
| **576**082 | DN 80 - PN 16 | 16 | 1 | - |
| **576**102 | DN 100 - PN 16 | 16 | 1 | - |
| **576**122 | DN 125 - PN 16 | 16 | 1 | - |
| **576**152 | DN 150 - PN 16 | 16 | 1 | - |
| **576**053 | DN 50 - PN 25 | 25 | 1 | - |
| **576**063 | DN 65 - PN 25 | 25 | 1 | - |
| **576**083 | DN 80 - PN 25 | 25 | 1 | - |
| **576**103 | DN 100 - PN 25 | 25 | 1 | - |
| **576**123 | DN 125 - PN 25 | 25 | 1 | - |
| **576**153 | DN 150 - PN 25 | 25 | 1 | - |
| **576**054 | DN 50 - PN 40 | 40 | 1 | - |
| **576**064 | DN 65 - PN 40 | 40 | 1 | - |
| **576**084 | DN 80 - PN 40 | 40 | 1 | - |
| **576**104 | DN 100 - PN 40 | 40 | 1 | - |
| **576**124 | DN 125 - PN 40 | 40 | 1 | - |
| **576**154 | DN 150 - PN 40 | 40 | 1 | - |



### 578

Pilot operated pressure reducing valve.
Coupling with counterflange EN 1092-1.
Complete with two pressure gauges.

Maximum upstream pressure: 16 bar
Adjustment pressure range: 2–14 bar
Medium temperature range: 1–65 °C
Material: cast iron

ATTESTATION DE CONFORMITÉ SANITAIRE ACS
WRAS APPROVED PRODUCT CERTIFICATION MARK

| Code | Connection | | |
|---|---|---|---|
| **578**062 | DN 65 - PN 16 | 1 | - |
| **578**082 | DN 80 - PN 16 | 1 | - |
| **578**102 | DN 100 - PN 16 | 1 | - |
| **578**122 | DN 125 - PN 16 | 1 | - |
| **578**152 | DN 150 - PN 16 | 1 | - |
| **578**202 | DN 200 - PN 10 | 1 | - |
| **578**252 | DN 250 - PN 10 | 1 | - |
| **578**302 | DN 300 - PN 10 | 1 | - |

## Combined group for pressure control



### 539..H

Combined group for pressure control in domestic water systems.
Replaceable cartridge.
For high temperature.
Shut-off valve with extended lever.
EA type check valve.
With G 1/4" upstream and downstream pressure test ports.
**Pressure reducing valve certified to EN 1567.**
**Check valve certified to EN 13959.**

PATENT PENDING

Maximum upstream pressure: 16 bar
Adjustment pressure range: 1–5,5 bar
Medium temperature range: 2–80 °C
Material: dezincification resistant brass DR "low lead"

| Code | Inlet connection | Outlet connection | | |
|---|---|---|---|---|
| 539050H | Rp 3/4" F | 1" F captive nut | 1 | 5 |

## Combined group for pressure and temperature control



### 539..H

Combined group for pressure and temperature control in domestic water systems.
Complete with:
- 539H series combined unit, cold water circuit;
- 539H series combined unit, hot water circuit;
- adjustable thermostatic mixing valve with advanced thermal performance and anti-scald function;
- connection tee complete with check valve;
- pressure gauges (optional).

**Thermostatic mixing valve certified to EN 1111 and EN 1287.**

Maximum working pressure: 10 bar
Medium temperature range: 2–80 °C
Material: dezincification resistant brass DR "low lead"

| Code | Inlet connection | Outlet connection | Adjustment temperature (°C) | Kv ($m^3/h$) | | |
|---|---|---|---|---|---|---|
| 539500H | Rp 3/4" F | 3/4" M | 35–65 | 1,7 | 1 | - |

## Accessories for combined group for pressure control



### 557

Pressure gauge.

Accuracy class: Pressure gauge UNI 2,5
Pressure gauge scale: 0–10 bar

| Code | Connection | | |
|---|---|---|---|
| **557**010 | 1/4" M central back conn. | 1 | 20 |



Pressure gauge for 533H series inclined micro pressure reducing valves for special applications.

Pressure gauge scale: 0–10 bar

| Code | Connection | | |
|---|---|---|---|
| F0002665 | 1/4" M radial connection | 1 | - |



### 539..H

Spare catridge for combined group for pressure control.

| Code | | |
|---|---|---|
| 539005H | 1 | 5 |



### 539..H

Shell insulation for combined multi-function unit for 539H series pressure control.

| Code | | |
|---|---|---|
| CBN539050 | 1 | 10 |

# THERMOSTATIC MIXING VALVES

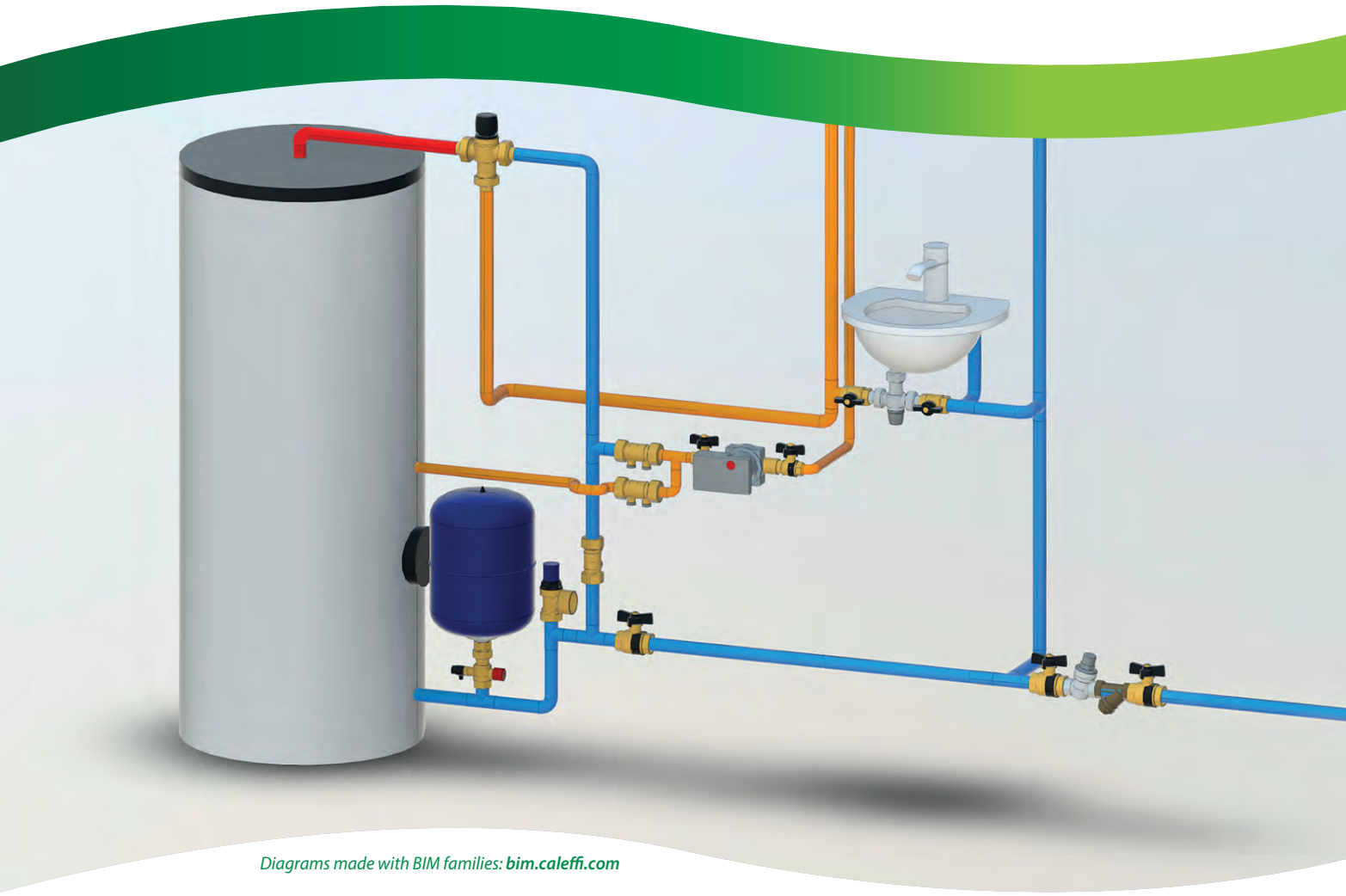

*Diagrams made with BIM families:* ***bim.caleffi.com***

**Thermostatic mixing valves for small applications**
**Tempering valves for installation at the point of distribution**
**Anti-scald thermostatic mixing valves at the point of use**
**Adjustable thermostatic mixing valve for under sink installation**
**Anti-scald tempering and thermostatic mixing valves**
**“L” pattern adjustable thermostatic mixing valve**
**Combined group for pressure and temperature control**
**Thermostatic mixing valves for commercial applications**
**Thermostatic mixing valves with thermal disinfection**
**Hybrid electronic mixing valves**
**Electronic mixing valve with thermal disinfection - 230 V**
**Electronic mixing valve with thermal disinfection - 24 V**
**Advanced electronic mixing valve with connectivity**
**Spare parts for hybrid electronic mixing valves**
**Spare parts for electronic mixing valve**
**Multifunction thermostatic regulators**
**Thermostatic regulator with built-in check valve**
**Standard thermostatic regulators**
**Accessories for thermostatic regulators**

**Domestic Water Sizer**
**DOMESTIC WATER SYSTEM SIZER ALSO FOR SMARTPHONE**
**Available on www.caleffi.com and app for smartphone.**
**Download the version for your iOS and Android® mobile phone.**

# THERMOSTATIC MIXING VALVES

## Thermostatic mixing valves for small applications



### 520

Adjustable thermostatic mixing valve.

Maximum working pressure: 10 bar
Medium temperature range: 2–90 °C
Material: brass
Finish: nickel plated

| Code | Connection | Adjustment temperature (°C) | Kv ($m^3$/h) | | |
|---|---|---|---|---|---|
| **520**430 | 1/2″F | 30–48 | 1,30 | 1 | 50 |
| **520**440 | 1/2″F | 40–60 | 1,30 | 1 | 50 |
| **520**530 | 3/4″F | 30–48 | 1,80 | 1 | 50 |
| **520**540 | 3/4″F | 40–60 | 1,80 | 1 | 50 |
| **520**630 | 1″F | 30–48 | 2,75 | 1 | 10 |
| **520**640 | 1″F | 40–60 | 2,75 | 1 | 10 |

### 522

Adjustable thermostatic mixing valve. For installation under hot water storage heaters.

Maximum working pressure: 10 bar
Medium temperature range: 2–90 °C
Material: brass
Finish: nickel plated



| Code | Connection | Adjustment temperature (°C) | Kv ($m^3$/h) | | |
|---|---|---|---|---|---|
| **522**430 | 1/2″F | 30–48 | 1,30 | 1 | - |
| **522**440 | 1/2″F | 40–60 | 1,30 | 1 | - |



### 521

Adjustable anti-scale thermostatic mixing valve.
PATENT

Maximum working pressure: 14 bar
Medium temperature range: 2–85 °C
Material: dezincification resistant brass DR "low lead"
Finish: nickel plated

| Code | Connection | Adjustment temperature (°C) | Kv ($m^3$/h) | | |
|---|---|---|---|---|---|
| **521**400 | 1/2″M | 30–65 | 2,6 | 1 | 10 |
| **521**500 | 3/4″M | 30–65 | 2,6 | 1 | 10 |



### 521

Adjustable anti-scale thermostatic mixing valve with check valves.
PATENT

Maximum working pressure: 14 bar
Medium temperature range: 2–85 °C
Material: dezincification resistant brass DR "low lead"
Finish: nickel plated

| Code | Connection | Adjustment temperature (°C) | Kv ($m^3$/h) | | |
|---|---|---|---|---|---|
| **521**503 | 3/4″M | 30–65 | 2,6 | 1 | 10 |



### 521

Adjustable, anti-scale thermostatic mixing valve with check valves, strainers at the inlets and compression ends.

Maximum working pressure: 14 bar
Medium temperature range: 2–85 °C
Material: dezincification resistant brass DR "low lead"
Finish: nickel plated

| Code | Connection | Adjustment temperature (°C) | Kv ($m^3$/h) | | |
|---|---|---|---|---|---|
| **521**115 | Ø 15 | 30–65 | 2,6 | 1 | 10 |
| **521**122 | Ø 22 | 30–65 | 2,6 | 1 | 10 |

## Tempering valves for installation at the point of distribution



### 5219

Tempering valve adjustable with knob, for temperature control at the distribution point.
Complete **with thermal shut-off function**.
PATENT

Maximum working pressure: 10 bar
Medium temperature range: 2–90 °C
Material: dezincification resistant brass DR "low lead"
Finish: nickel plated

| Code | Connection | Notes | Adjustment temperature (°C) | Kv ($m^3/h$) | | |
|---|---|---|---|---|---|---|
| **521934** | 1/2" M | - | 35–65 | 1,5 | 1 | 10 |
| **521935** | 3/4" M | - | 35–65 | 1,7 | 1 | 10 |
| **521936** | 1" M | - | 35–65 | 3,0 | 1 | 5 |
| **521914** | 1/2" M | with check valves and strainers | 35–65 | 1,5 | 1 | 10 |
| **521915** | 3/4" M | with check valves and strainers | 35–65 | 1,7 | 1 | 10 |
| **521916** | 1" M | with check valves and strainers | 35–65 | 3 | 1 | 5 |



### 5218

Tempering valve, adjustable with knob, with check valves and strainers. For temperature control at the distribution point.
Complete **with thermal shut-off function**.
**Certified to EN 15092 standard**.
PATENT

Maximum working pressure: 10 bar
Medium temperature range: 2–90 °C
Material: dezincification resistant brass DR "low lead"
Finish: nickel plated

| Code | Connection | Adjustment temperature (°C) | Kv ($m^3/h$) | | |
|---|---|---|---|---|---|
| **521814** | 1/2" M | 45–65 | 1,5 | 1 | 10 |
| **521815** | 3/4" M | 45–65 | 1,7 | 1 | 10 |
| **521816** | 1" M | 45–65 | 3,0 | 1 | 5 |

## Anti-scald thermostatic mixing valves at the point of use



### 5213

Adjustable thermostatic mixing valve with check valves and strainers.
High thermal performance device **with anti-scald safety function**.
**Certified NHS D08, BS 7942, EN 1111 and EN 1287 standards (DN 15 - DN 20)**.

Maximum working pressure: 10 bar
Medium temperature range: 2–85 °C
Material: dezincification resistant brass DR
Finish: nickel plated

| Code | Connection | Adjustment temperature (°C) | Kv ($m^3/h$) | | |
|---|---|---|---|---|---|
| **521304** | 1/2" M | 30–50 | 1,5 | 1 | 10 |
| **521303** | 3/4" M | 30–50 | 1,7 | 1 | 10 |
| **521306** | 1" M | 35–50 | 3,0 | 1 | 5 |



### 5213

Adjustable thermostatic mixing valve with check valves, strainers and compression ends.
High thermal performance device **with anti-scald safety function**.
**Certified to NHS D08, BS 7942, EN 1111 and EN 1287 standards**.

Maximum working pressure: 10 bar
Medium temperature range: 2–85 °C
Material: dezincification resistant brass DR
Finish: nickel plated

| Code | Connection | Adjustment temperature (°C) | Kv ($m^3/h$) | | |
|---|---|---|---|---|---|
| **521315** | Ø 15 | 30–50 | 1,5 | 1 | 10 |
| **521322** | Ø 22 | 30–50 | 1,7 | 1 | 10 |



### 5217

Thermostatic mixing valve, adjustable with knob, with check valves and strainers.
High thermal performance device **with anti-scald safety function**.
**Certified to NF 079 standard doc. 8**.

Maximum working pressure: 10 bar
Medium temperature range: 2–85 °C
Material: brass
Finish: nickel plated

| Code | Connection | Adjustment temperature (°C) | Kv ($m^3/h$) | | |
|---|---|---|---|---|---|
| **521714** | 1/2" M | 30–50 | 1,50 | 1 | 10 |
| **521713** | 3/4" M | 30–50 | 1,85 | 1 | 10 |



## 5218

Pre-formed shell insulation.
For 5213, 5217, 5218 and 5219 series 1/2" and 3/4" thermostatic mixing valves.

| Code | Notes | | |
|---|---|---|---|
| CBN521814 | 1/2" | 1 | 25 |
| CBN521815 | 3/4" | 1 | 25 |

## Adjustable thermostatic mixing valve for under sink installation



Pb LOW LEAD

## 5212

Adjustable thermostatic mixing valve for under sink installation.
Complete with mounting brackets and adjustment key.
High thermal performance device with anti-scald safety function.
With check valves and strainers at the inlets.
**Certified to ASSE 1070 standard**.

Maximum working pressure: 10 bar
Medium temperature range: 2-90 °C
Material: dezincification resistant brass DR "low lead"

| Code | Connection | Adjustment temperature (°C) | Kv ($m^3/h$) | | |
|---|---|---|---|---|---|
| **5212**01 | 3/8" M | 35–50 | 0,45 | 1 | 25 |

## Anti-scald tempering and thermostatic mixing valves



Pb LOW LEAD

## 5213

Adjustable anti-scald tempering valve with check valves and strainers.
**Certified to AS 4032.2**.

Maximum working pressure: 14 bar
Medium temperature range: 2–85 °C
Material: dezincification resistant brass DR "low lead"

Lead Free AS 4032.2 WMKA02466

| Code | Connection | Notes | Adjustment temperature (°C) | | |
|---|---|---|---|---|---|
| **5213**12 AUS | 1/2" M | With insulation | 30–50 | 1 | 10 |
| **5213**19 AUS | 3/4" M | With insulation | 30–50 | 1 | 5 |
| **5213**25 AUS | 1" M | | 20–50 | 1 | 5 |

Pb LOW LEAD

## 5213

Adjustable thermostatic mixing valve with isolating valves, check valves and strainers.
High thermal performance device with anti-scald safety function.
**Certified to AS 4032.1**.

Maximum working pressure: 14 bar
Medium temperature range: 2–85 °C
Material: dezincification resistant brass DR "low lead"



Lead Free AS 4032.1 WMKA02466
AS 1357.1/2 WMK25724
NSW HEALTH APPROVED PLUMBING COMPONENTS

| Code | Connection | Adjustment temperature (°C) | Kv ($m^3/h$) | | |
|---|---|---|---|---|---|
| **5213**12TMX AUS | 1/2" M | 30–50 | 1,3 | 1 | - |
| **5213**19TMX AUS | 3/4" M | 30–50 | 1,4 | 1 | 6 |

## "L" pattern adjustable thermostatic mixing valve



Pb LOW LEAD

### 5200

Adjustable thermostatic mixing valve with knob.
Complete with check valves and strainers.
**Certified to EN 1111 and EN 1287 standards**.

Maximum working pressure: 10 bar
Medium temperature range: 2–90 °C
Material: dezincification resistant brass DR "low lead"

kiwa WRAS APPROVED PRODUCT CERTIFICATION MARK VA 1.59/20511

| Code | Connection | DN | Adjustment temperature (°C) | Kv ($m^3/h$) | | |
|---|---|---|---|---|---|---|
| **5200**40 | 1/2" M | DN 15 | 35–65 | 1,5 | 1 | 10 |
| **5200**50 | 3/4" M | DN 20 | 35–65 | 1,7 | 1 | - |
| **5200**60 | 1" M | DN 25 | 35–65 | 3,0 | 1 | 5 |



Pb LOW LEAD

### 520

Connection tee.
Complete with check valve.
For 5200 series thermostatic mixing valve.

Maximum working pressure: 10 bar
Medium temperature range: 2-90 °C
Material: dezincification resistant brass DR "low lead"

| Code | Inlet connection | Outlet connection | Connection | DN | | |
|---|---|---|---|---|---|---|
| **520**004 | 1" M | 1" F captive nut | 3/4" M | DN 20 | 1 | 20 |



Pb LOW LEAD

### 5201

Control unit for domestic hot water temperature at the point of distribution.
Note (*) with off-centre fittings
Complete with:
- thermostatic mixing valve with thermal shut-off function;
- tee complete with check valves for cold water connection.

**Mixing valve certified to EN 1111 and EN 1287**.

Maximum working pressure: 10 bar
Medium temperature range: 2–90 °C
Material: dezincification resistant brass DR "low lead"

kiwa WRAS APPROVED PRODUCT CERTIFICATION MARK VA 1.59/20511

| Code | Connection | Notes | DN | Adjustment temperature (°C) | Kv ($m^3/h$) | | |
|---|---|---|---|---|---|---|---|
| **52015**0 | 3/4" M | - | DN 20 | 35–65 | 1,7 | 1 | - |
| **52016**0 | 1" M | - | DN 25 | 35–65 | 3,0 | 1 | - |
| **52016**2 | 1" M | (*) | DN 25 | 35–65 | 3,0 | 1 | - |



### 520

Accessory kit for recirculation connection complete with check valves.

Maximum working pressure: 10 bar
Medium temperature range: 2–90 °C
Material: brass

| Code | Inlet connection | Outlet connection | Connection | DN | | |
|---|---|---|---|---|---|---|
| **520**005 | 3/4" M | 3/4" F | 1" F | DN 20 | 1 | - |



### 5201

Pre-formed shell insulation for control unit for domestic hot water temperature at the point of distribution 5201 series.

| Code | Article use | | |
|---|---|---|---|
| CBN520150 | 520150 | 1 | 20 |
| CBN520160 | 520160 | 1 | 16 |



### 6480

Pair of off-centre fittings.
For connecting zone valves unit 6480, 633 series and respective by-pass tee 6490, 635 series to any dual manifold with outlet centre distance between 50 and 70 mm.

| Code | Connection | | |
|---|---|---|---|
| **6480**05 | 3/4" M | 1 | - |
| **6480**06 | 1" M | 1 | - |



Pb LOW LEAD

### 5201

Control unit for domestic hot water temperature at the point of distribution, complete with recirculation connection.
Complete with:
- thermostatic mixing valve with thermal shut-off function;
- tee for cold water connection complete with check valves
- kit for recirculation connection complete with check valves;
- shut-off valves;
- temperature gauge with pocket on the mixed water outlet.

**Mixing valve certified to EN 1111 and EN 1287**.

Maximum working pressure: 10 bar
Medium temperature range: 2–90 °C
Material: dezincification resistant brass DR "low lead"

| Code | Inlet connection | Outlet connection | DN | Adjustment temperature (°C) | Kv ($m^3/h$) | | |
|---|---|---|---|---|---|---|---|
| **52015**5 | 3/4" M | 3/4" F | DN 20 | 35–65 | 1,7 | 1 | - |

## Combined group for pressure and temperature control

### 539..H



Combined group for pressure and temperature control in domestic water systems.
Complete with:
- 539H series combined unit, cold water circuit;
- 539H series combined unit, hot water circuit;
- adjustable thermostatic mixing valve with advanced thermal performance and anti-scald function;
- connection tee complete with check valve;
- pressure gauges (optional).

**Thermostatic mixing valve certified to EN 1111 and EN 1287.**

Maximum working pressure: 10 bar
Medium temperature range: 2–80 °C
Material: dezincification resistant brass DR "low lead"

| Code | Inlet connection | Outlet connection | Adjustment temperature (°C) | Kv ($m^3/h$) | | |
|---|---|---|---|---|---|---|
| 539500H | Rp 3/4" F | 3/4" M | 35–65 | 1,7 | 1 | - |

## Thermostatic mixing valves for commercial applications

### 5231



Adjustable thermostatic mixing valve, for centralised systems.
Composite anti-scale internal regulator.
PATENT

Maximum working pressure: 14 bar
Medium temperature range: 2–90 °C
Material: dezincification resistant brass DR

| Code | Connection | Notes | Adjustment temperature (°C) | Kv ($m^3/h$) | | |
|---|---|---|---|---|---|---|
| **523**140 | 1/2" M | - | 35–65 | 4,3 | 1 | 5 |
| **523**150 | 3/4" M | - | 35–65 | 4,5 | 1 | - |
| **523**160 | 1" M | - | 35–65 | 5,5 | 1 | - |
| **523**170 | 1 1/4" M | - | 35–65 | 7,6 | 1 | - |
| **523**180 | 1 1/2" M | - | 35–65 | 11,0 | 1 | - |
| **523**190 | 2" M | - | 35–65 | 13,3 | 1 | - |
| **523**163 | 1" M | with check valves | 35–65 | 5,5 | 1 | - |
| **523**173 | 1 1/4" M | with check valves | 35–65 | 7,6 | 1 | - |

### 5231



Adjustable thermostatic mixing valve, for centralised systems.
**With check valves and compression ends.**
Antiscale inner regulator in technopolymer.

Maximum working pressure: 14 bar
Maximum inlet temperature: 90 °C
Material: dezincification resistant brass DR

| Code | Connection | Adjustment temperature (°C) | Kv ($m^3/h$) | | |
|---|---|---|---|---|---|
| **523**162 | Ø 28 | 35–65 | 7,6 | 1 | - |



# 5230

Adjustable thermostatic mixing valve, **with replaceable cartridge**, for centralised systems.

Maximum working pressure: 14 bar
Medium temperature range: 2–85 °C
Material: brass

| Code | Connection | Notes | Adjustment temperature (°C) | Kv ($m^3/h$) | | |
|---|---|---|---|---|---|---|
| **523**040 | 1/2" M | - | 30–65 | 4,0 | 1 | - |
| **523**050 | 3/4" M | - | 30–65 | 4,5 | 1 | - |
| **523**060 | 1" M | - | 30–65 | 6,9 | 1 | - |
| **523**070 | 1 1/4" M | - | 30–65 | 9,1 | 1 | - |
| **523**080 | 1 1/2" M | - | 36–60 | 14,5 | 1 | - |
| **523**090 | 2" M | - | 36–60 | 19,0 | 1 | - |
| **523**043 | 1/2" M | with check valves | 30–65 | 4,0 | 1 | - |
| **523**053 | 3/4" M | with check valves | 30–65 | 4,5 | 1 | - |
| **523**063 | 1" M | with check valves | 30–65 | 6,9 | 1 | - |
| **523**073 | 1 1/4" M | with check valves | 30–65 | 9,1 | 1 | - |

# 5230

Adjustable thermostatic mixing valve, **with replaceable cartridge**, for centralised systems.
**With check valves and compression ends**.



Maximum working pressure: 14 bar
Medium temperature range: 2–85 °C
Material: brass

| Code | Connection | Adjustment temperature (°C) | Kv ($m^3/h$) | | |
|---|---|---|---|---|---|
| **523**052 | Ø 22 | 30–65 | 4,5 | 1 | - |
| **523**062 | Ø 28 | 30–65 | 6,9 | 1 | - |



# 524

Adjustable thermostatic mixing valve for centralised systems. With recirculating connection.
Note (*): without recirculation connection

Maximum working pressure: 10 bar
Medium temperature range: 2–90 °C
Material: brass

| Code | Connection | Notes | DN | Adjustment temperature (°C) | Kv ($m^3/h$) | | |
|---|---|---|---|---|---|---|---|
| **524**400 | 1 1/8" M | (*) | DN 15 | 30–65 | 1,4 | 1 | - |
| **524**500 | 1 1/4" M | - | DN 20 | 30–65 | 2,5 | 1 | - |
| **524**600 | 1 1/2" M | - | DN 25 | 30–65 | 4,0 | 1 | - |
| **524**700 | 2" M | - | DN 32 | 30–65 | 7,7 | 1 | - |
| **524**800 | 2 1/4" M | - | DN 40 | 36–60 | 11,5 | 1 | - |
| **524**900 | 2 3/4" M | - | DN 50 | 36–60 | 15,0 | 1 | - |



# 524

Connection kit for mixing valves with threaded connections, 524 series.
Complete with:
- 2 female unions with check valves, strainers and seals;
- 1 female union with seal.

| Code | Connection | Article use | | |
|---|---|---|---|---|
| **524**004 | 1/2" F | 524400 | 1 | - |
| **524**005 | 3/4" F | 524500 | 1 | - |
| **524**006 | 1" F | 524600 | 1 | - |
| **524**007 | 1 1/4" F | 524700 | 1 | - |
| **524**008 | 1 1/2" F | 524800 | 1 | - |
| **524**009 | 2" F | 524900 | 1 | - |



# 524

Adjustable thermostatic mixing valve.
Flanged connections.
Complete with counterflange EN 1092-1.
With connection for the recirculation.

Maximum working pressure: 10 bar
Medium temperature range: 2–90 °C
Temperature setting: 55 °C
Nominal pressure: PN 10
Material: bronze

| Code | Connection | Adjustment temperature (°C) | Kv ($m^3/h$) | | |
|---|---|---|---|---|---|
| **524**060 | DN 65 - PN 10 | 45–65 | 32 | 1 | - |
| **524**080 | DN 80 - PN 10 | 45–65 | 43 | 1 | - |

# Thermostatic mixing valves with thermal disinfection



## 6005 LEGIOFLOW®

Multi-function compact unit for temperature control, thermal disinfection and distribution for domestic water system.
Complete with:
- **anti-scald** thermostatic mixing valve;
- flushing valve for **thermal disinfection**, with normally closed **thermo-electric actuator**;
- ball shut-off valve with built-in strainers and check valves;
- **outlet kit for cold water circuit**.

Note (*): without thermo-electric actuator.
**Performance according to the NF 079 doc. 8, EN 1111 and EN 1287 standards**.
PATENT

Maximum working pressure: 10 bar
Medium temperature range: 5–85 °C
Adjustment temperature range: 30–50 °C
Electric supply: 230 V AC
Running power consumption: 3 W
Protection class: IP 44
Supply cable length: 0,8 m
Material: dezincification resistant brass DR
Temperature setting: 43 °C

| Code | Connection | Notes | Kv mixing valve ($m^3/h$) | Kv flushing valve ($m^3/h$) | | |
|---|---|---|---|---|---|---|
| **600500** | 3/4" M | - | 1,75 | 1,80 | 1 | 6 |
| **600501** | 3/4" M | (*) | 1,75 | 1,80 | 1 | 6 |



## 6005 LEGIOFLOW®

Multi-function compact unit for temperature control, thermal disinfection and distribution for domestic water system. Version without cold water circuit outlet kit.
Complete with:
- **anti-scald** thermostatic mixing valve;
- flushing valve for **thermal disinfection** complete with **thermo-electric actuator**;
- ball shut-off valve with built-in strainers and check valves;

For applications with button- or photocell-operated user taps.
Note (*): without thermo-electric actuator.
**Performance according to the NF 079 doc. 8, EN 1111 and EN 1287 standards**.
PATENT

Maximum working pressure: 10 bar
Medium temperature range: 5–85 °C
Adjustment temperature range: 30–50 °C
Electric supply: 230 V AC
Running power consumption: 3 W
Protection class: IP 44
Supply cable length: 0,8 m
Material: dezincification resistant brass DR
Temperature setting: 43 °C

| Code | Connection | Notes | Kv mixing valve ($m^3/h$) | Kv flushing valve ($m^3/h$) | | |
|---|---|---|---|---|---|---|
| **600502** | 3/4" M | - | 1,75 | 1,80 | 1 | 5 |
| **600503** | 3/4" M | (*) | 1,75 | 1,80 | 1 | 5 |

## 6005 LEGIOFLOW®

Multi-function compact unit for temperature control, thermal disinfection and distribution for domestic water system.
Complete with:
- **anti-scald** thermostatic mixing valve;
- flushing valve for **thermal disinfection** complete with **thermo-electric actuator**;
- ball shut-off valve with built-in strainers and check valves;
- **outlet kit for cold water circuit**;
- distribution manifolds with shut-off valves;
- box for manifolds code 362056 (560x330x80).

Note (*): without thermo-electric actuator.
**Performance according to NF 079 doc. 8,EN 1111 and EN 1287**.
PATENT

Maximum working pressure: 10 bar
Adjustment temperature range: 30–50 °C
Maximum inlet temperature: 85 °C
Electric supply: 230 V AC
Running power consumption: 3 W
Protection class: IP 44
Supply cable length: 0,8 m
Material: dezincification resistant brass DR
Temperature setting: 43 °C
Outlet centre distance: 35 mm

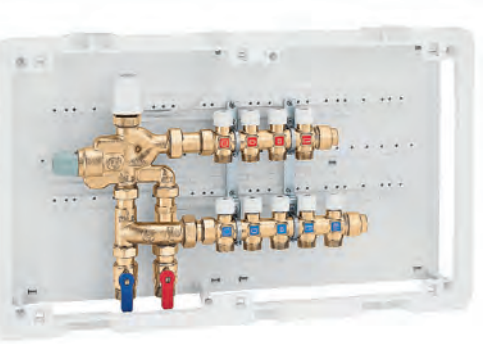

| Code | Connection | Hot outlet connection | Cold outlet connection | Notes | | |
|---|---|---|---|---|---|---|
| **600530** | 3/4" M | 23 p. 1,5 - 2 out. | 23 p. 1,5 - 3 out. | - | 1 | - |
| **600540** | 3/4" M | 23 p. 1,5 - 3 out. | 23 p. 1,5 - 4 out. | - | 1 | - |
| **600550** | 3/4" M | 23 p. 1,5 - 4 out. | 23 p. 1,5 - 5 out. | - | 1 | - |
| **600531** | 3/4" M | 23 p. 1,5 - 2 out. | 23 p. 1,5 - 3 out. | (*) | 1 | - |
| **600541** | 3/4" M | 23 p. 1,5 - 3 out. | 23 p. 1,5 - 4 out. | (*) | 1 | - |
| **600551** | 3/4" M | 23 p. 1,5 - 4 out. | 23 p. 1,5 - 5 out. | (*) | 1 | - |



## 6002

Timer with programmable key, settings from 0.25 to 15 minutes.
To operate the valves used to carry out thermal disinfection of circuit sections, up to the taps.

Electric supply: 230 V AC

| Code | | |
|---|---|---|
| **600200** | 1 | - |

# ELECTRONIC MIXING VALVES

## Hybrid electronic mixing valves



### 6000 LEGIOMIX® 2.0

Hybrid electronic mixing valve.
Complete with:
- hybrid mixing valve with motorised actuator;
- electronic regulator with programming of temperature levels and thermal disinfection cycles, built into the actuator casing;
- integrated flow temperature probe;
- circuit return temperature probe;
- flow temperature gauge.

**Fitted for data saving function (optional), with recording of temperatures and functional parameters**.
Fitted for connection to remote control system (optional).
PATENT PENDING

Maximum working pressure: 10 bar
Medium temperature range: 5–90 °C
Adjustment temperature range: 35–65 °C
Disinfection temperature range: 50–85 °C
Electric supply: 230 V AC
Protection class: IP 54
Material: dezincification resistant brass DR

| Code | Connection | DN | Kv ($m^3/h$) | | |
|---|---|---|---|---|---|
| **6000**45 EST | 1/2" M | DN 15 | 4,3 | 1 | - |
| **6000**55 EST | 3/4" M | DN 20 | 4,3 | 1 | - |
| **6000**65 EST | 1" M | DN 25 | 7,6 | 1 | - |
| **6000**75 EST | 1 1/4" M | DN 32 | 10,0 | 1 | - |
| **6000**85 EST | 1 1/2" M | DN 40 | 13,0 | 1 | - |
| **6000**95 EST | 2" M | DN 50 | 18,0 | 1 | - |



### 6000 LEGIOMIX® 2.0

Optional board MODBUS-RTU transmission and logs.
By installing the board on the device, it will be possible to manage the device through a specific MODBUS-RTU transmission protocol for use in Building Automation and Control Systems (BACS).
The package includes the optional board, main board connection cable and logs.

| Code | | |
|---|---|---|
| **6000**01 | 1 | - |



### 6000 LEGIOMIX® 2.0

RS-485 USB cable and Caleffi Software.
Using the cable with RS-485 USB interface and the Caleffi Software included in the package, it is possible to manage the device from PC.
The two software programs can manage LEGIOMIX® 24 V and LEGIOMIX® 2.0 mixers.

| Code | | |
|---|---|---|
| **6000**02 | 1 | - |

## Electronic mixing valve with thermal disinfection - 230 V

# 6000 LEGIOMIX®

Electronic mixing valve with programmable thermal disinfection and check on disinfection, 230 V. Male threaded connections with union. Female threaded mixed connection.
Complete with:
- three-way ball valve;
- actuator;
- regulator;
- flow temperature probe;
- return temperature probe.

PATENT

Maximum working pressure: 10 bar
Medium temperature range: 5–100 °C
Adjustment temperature range: 20–85 °C
Disinfection temperature range: 40–85 °C
Electric supply: 230 V AC
Running power consumption: (6,5+6) VA
Protection class: IP 65 (actuator)
Material: brass



| Code | Connection | Kv ($m^3/h$) | | |
|---|---|---|---|---|
| **600051** | 3/4" M | 8,4 | 1 | - |
| **600061** | 1" M | 10,6 | 1 | - |
| **600071** | 1 1/4" M | 21,2 | 1 | - |
| **600081** | 1 1/2" M | 32,5 | 1 | - |
| **600091** | 2" M | 41,0 | 1 | - |

# 6000 LEGIOMIX®

Electronic mixing valve with programmable thermal disinfection and check on disinfection, 230 V. Flanged connection PN 16.
To be coupled with flat counterflanges EN 1092-1.
Complete with:
- three-way ball valve;
- actuator;
- regulator;
- flow temperature probe;
- return temperature probe.

PATENT

Maximum working pressure: 10 bar
Medium temperature range: 5–100 °C
Adjustment temperature range: 20–85 °C
Disinfection temperature range: 40–85 °C
Electric supply: 230 V AC
Running power consumption: (6,5+10,5) VA
Protection class: IP 65
Material: dezincification resistant brass DR "low lead"

Pb LOW LEAD



| Code | Connection | Kv ($m^3/h$) | | |
|---|---|---|---|---|
| **600006** | DN 65 - PN 16 | 90,0 | 1 | - |
| **600008** | DN 80 - PN 16 | 105,0 | 1 | - |



# 6001

Anti-scald device for domestic hot water use.

Material: brass
Finish: chrome plated
Temperature setting: 48 °C

| Code | Connection | | |
|---|---|---|---|
| **600140** | 1/2" F | 1 | 10 |

# Electronic mixing valve with thermal disinfection - 24 V

## 6000 LEGIOMIX®

Electronic mixing valve with programmable thermal disinfection and check on disinfection, 24 V. Male threaded connections with union.
Female threaded mixed connection.
Complete with:
- three-way ball valve;
- actuator;
- regulator;
- flow temperature probe;
- return temperature probe.

**Fitted for remote control connection with RS-485 and MODBUS-RTU protocols**.
With auxiliary microswitch.
PATENT

Maximum working pressure: 10 bar
Medium temperature range: 5–100 °C
Adjustment temperature range: 20–85 °C
Disinfection temperature range: 40–85 °C
Electric supply: 24 V AC
Running power consumption: (6,5+6) VA
Protection class: IP 65
Material: brass



| Code | Connection | Mixed connection | Kv ($m^3$/h) | | |
|---|---|---|---|---|---|
| **600054** | 3/4" M | 3/4" F | 8,4 | 1 | - |
| **600064** | 1" M | 1" F | 10,6 | 1 | - |
| **600074** | 1 1/4" M | 1 1/4" F | 21,2 | 1 | - |
| **600084** | 1 1/2" M | 1 1/2" F | 32,5 | 1 | - |
| **600094** | 2" M | 2" F | 41,0 | 1 | - |

## 6000 LEGIOMIX®

Electronic mixing valve with programmable thermal disinfection and check on disinfection, 24 V. Flanged connection PN 16.
To be coupled with flat counterflanges EN 1092-1.
Complete with:
- three-way ball valve;
- actuator;
- regulator;
- flow temperature probe;
- return temperature probe.

**Fitted for remote control connection with RS-485 and MODBUS-RTU protocols**.
With auxiliary microswitch.
PATENT

Maximum working pressure: 10 bar
Medium temperature range: 5–100 °C
Adjustment temperature range: 20–85 °C
Disinfection temperature range: 40–85 °C
Electric supply: 24 V AC
Running power consumption: (6,5+10,5) VA
Protection class: IP 65
Material: dezincification resistant brass DR "low lead"




| Code | Connection | Kv ($m^3$/h) | | |
|---|---|---|---|---|
| **600016** | DN 65 - PN 16 | 90,0 | 1 | - |
| **600018** | DN 80 - PN 16 | 105,0 | 1 | - |



## 7550

MODBUS-RTU/BACnet converter for connection with BMS systems.
Preconfigured to be connected with:
- CONTECA EASY and AQUAPRO EASY heat meters (max 35 devices).
- LEGIOMIX electronic mixing valve (max 32 devices) and LEGIOMIX 2.0 (max 25 devices)

Mounting on DIN rail.

Ambient temperature range: -20–70 °C
Electric supply: 12-24 V DC, 24 V AC
Running power consumption: 3 W

| Code | Notes | | |
|---|---|---|---|
| **755052** | | 1 | - |

## Advanced electronic mixing valve with connectivity

# 6003 LEGIOMIX®evo NEW

Advanced electronic mixing valve with programmable thermal disinfection. **With connectivity**. Male threaded connections with union. Female threaded mixed connection.
**Notes:**
**- A: 3 point control signal**
**- B: 0–10 V control signal with failsafe**
Complete with:
- three-way ball valve;
- actuator;
- regulator;
- flow temperature probe;
- return temperature probe;
- storage temperature probe (optional code 600003).
Material: dezincification resistant brass DR "low lead" (24 V version)
Material: brass (230 V version)
PATENT

Maximum working pressure: 10 bar
Medium temperature range: 5–100 °C
Adjustment temperature range: 20–85 °C
Disinfection temperature range: 40–85 °C
Running power consumption: (9+6) VA
Protection class: IP 65 (actuator)



Pb LOW LEAD

| Code | Connection | Notes | Electric supply | Kv ($m^3$/h) | | |
|---|---|---|---|---|---|---|
| **600351** | 3/4" M | **A** | 230 V AC | 8,4 | 1 | - |
| **600361** | 1" M | **A** | 230 V AC | 10,6 | 1 | - |
| **600371** | 1 1/4" M | **A** | 230 V AC | 21,2 | 1 | - |
| **600381** | 1 1/2" M | **A** | 230 V AC | 32,5 | 1 | - |
| **600391** | 2" M | **A** | 230 V AC | 41,0 | 1 | - |
| **600354** | 3/4" M | **A** | 24 V AC | 8,4 | 1 | - |
| **600364** | 1" M | **A** | 24 V AC | 10,6 | 1 | - |
| **600374** | 1 1/4" M | **A** | 24 V AC | 21,2 | 1 | - |
| **600384** | 1 1/2" M | **A** | 24 V AC | 32,5 | 1 | - |
| **600394** | 2" M | **A** | 24 V AC | 41,0 | 1 | - |
| **600353** | 3/4" M | **B** | 24 V AC | 8,4 | 1 | - |
| **600363** | 1" M | **B** | 24 V AC | 10,6 | 1 | - |
| **600373** | 1 1/4" M | **B** | 24 V AC | 21,2 | 1 | - |
| **600383** | 1 1/2" M | **B** | 24 V AC | 32,5 | 1 | - |
| **600393** | 2" M | **B** | 24 V AC | 41,0 | 1 | - |

# 6003 LEGIOMIX®evo NEW

Advanced electronic mixing valve with programmable thermal disinfection. **With connectivity**. Flanged connections.
To be coupled with counterflanges EN 1092-1.
**Notes:**
**- A: 3 point control signal**
**- B1: 0–10 V control signal with failsafe**
**- B2: 0–10 V control signal without failsafe**
Complete with:
- three-way ball valve;
- actuator;
- regulator;
- flow temperature probe;
- return temperature probe;
- storage temperature probe (optional code 600003).
PATENT

Maximum working pressure: 10 bar
Medium temperature range: 5–100 °C
Adjustment temperature range: 20–85 °C
Disinfection temperature range: 40–85 °C
Running power consumption: (9+10) VA
Protection class: IP 65 (actuator)
Material: dezincification resistant brass DR "low lead"



Pb LOW LEAD

| Code | Connection | Notes | Electric supply | Kv ($m^3$/h) | | |
|---|---|---|---|---|---|---|
| **600316** | DN 65 - PN 16 | **A** | 230 V AC | 90,0 | 1 | - |
| **600318** | DN 80 - PN 16 | **A** | 230 V AC | 105,0 | 1 | - |
| **600336** | DN 65 - PN 16 | **B1** | 24 V AC | 90,0 | 1 | - |
| **600338** | DN 80 - PN 16 | **B1** | 24 V AC | 105,0 | 1 | - |
| **600356** | DN 65 - PN 16 | **B2** | 24 V AC | 90,0 | 1 | - |
| **600358** | DN 80 - PN 16 | **B2** | 24 V AC | 105,0 | 1 | - |



# 6000 NEW

Storage temperature probe for electronic mixing valve 6003 series.

| Code | | |
|---|---|---|
| **600003** | 1 | - |

### Main specification

- Application in systems with high flow rates
- Ball mixing valve
- Programmable thermal disinfection
- Connectivity with Caleffi Cloud (via integrated ModBus or Bacnet) for remote control
- Easy to use via touchscreen
- Failsafe function in the event of electricity supply failure
- Recirculation pump management
- Three temperature probes: mixed, return and storage

### Function

The electronic mixing valve is used in centralised systems, of any size, that produce and distribute domestic hot water.
With fully electronic operation, the regulator and actuator are separate devices to allow optimum positioning in the central unit and the relevant programming management.
The regulator is also designed for installation with previous versions of LEGIOMIX electronic mixing valves. Retrofitting is possible both if you decide to improve the functions of an existing mixing valve by installing an advanced regulator, and if it becomes necessary to replace the previous regulator due to a malfunction.

### Recirculation pump management

The regulator can be used to set time bands for recirculation pump activation only when actually necessary, in order to optimise electricity and thermal energy consumption.




### Touchscreen display

The large touchscreen display makes it easy and intuitive to adjust all regulator settings and to read the data required to ensure the system is working properly.

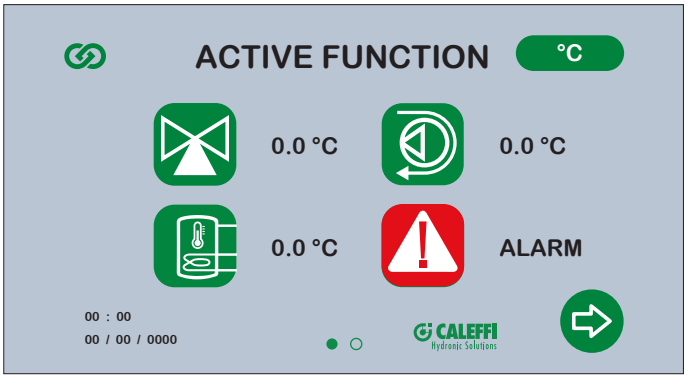


### Display log and dashboard

LEGIOMIX evo can be used to manage all settings and to view all temperature and disinfection logs directly via the regulator display. When the device is online, the Caleffi cloud can be accessed and a dedicated dashboard provides the option of viewing detailed graphs and tables, as well as managing all regulator settings.



### Application diagrams

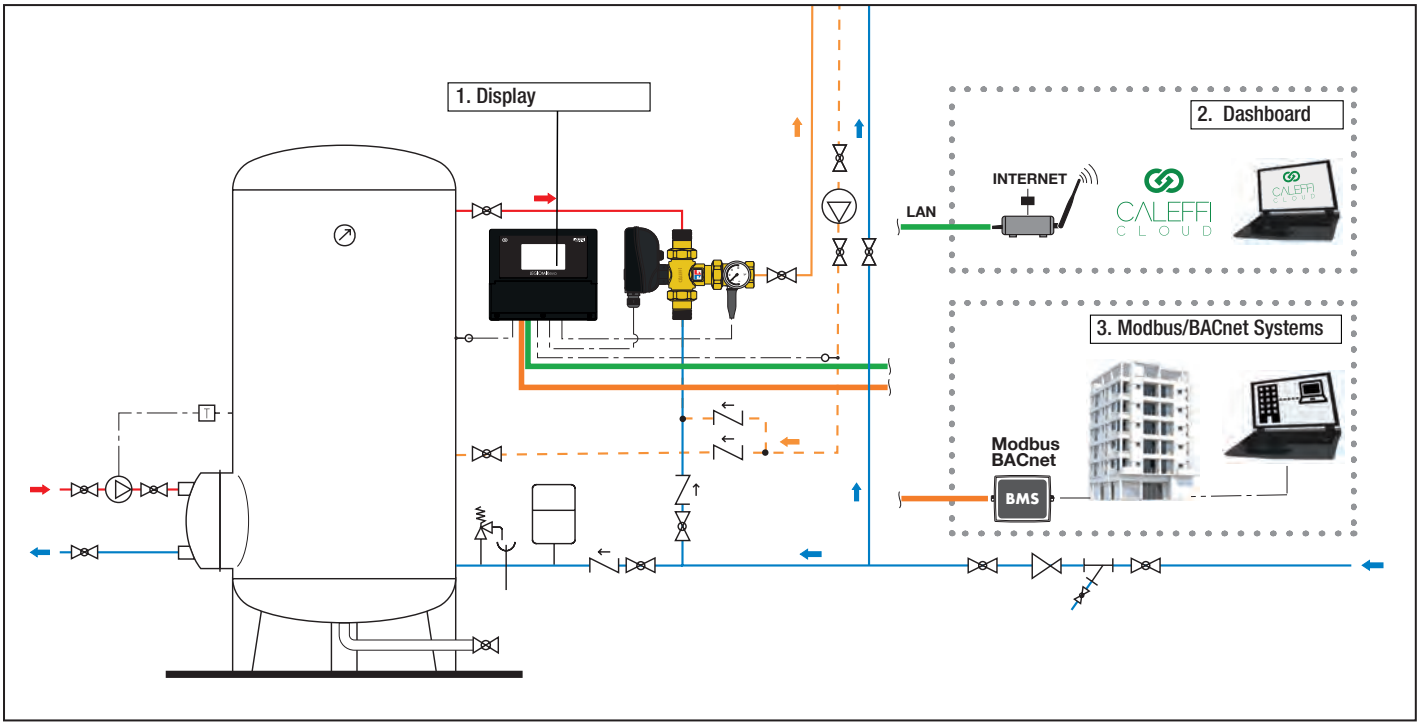

## Spare parts for hybrid electronic mixing valves



Spare valve body without unions for hybrid electronic mixing valve 6000 series.

| Code | Notes | | |
|---|---|---|---|
| F0000964 | DN 15 | 1 | - |
| F0000965 | DN 20 | 1 | - |
| F0000966 | DN 25 | 1 | - |
| F0000967 | DN 32 | 1 | - |
| F0000968 | DN 40 | 1 | - |
| F0000969 | DN 50 | 1 | - |



Spare flow probe for electronic mixing valve and hybrid electronic mixing valve.

| Code | Notes | | |
|---|---|---|---|
| F69807 | 1/2" – 2" (LEGIOMIX 2.0)<br>3/4" – 1 1/4" (LEGIOMIX - LEGIOMIXevo) | 1 | - |



NEW

Spare recirculation probe for electronic mixing valve and hybrid electronic mixing valve.

| Code | | | |
|---|---|---|---|
| F69591 | | 1 | - |



NEW

Spare contact probe holder for electronic mixing valve and hybrid electronic mixing valve.
Complete with syringe with conductor paste.

| Code | | | |
|---|---|---|---|
| F69531 | | 1 | - |



Spare temperature gauge.

| Code | Notes | | |
|---|---|---|---|
| F29571 | 0–120 °C | 1 | - |



Spare digital regulator with actuator for hybrid electronic mixing valve 6000 series.

| Code | Notes | | |
|---|---|---|---|
| F0000970 | DN 15 - DN 20 | 1 | - |
| F0000971 | DN 25 - DN 50 | 1 | - |

## Spare parts for electronic mixing valve



Spare parts for mixing valve, 230 V.
Complete with:
- 3-way ball valve;
- actuator;
- flow temperature probe;
- temperature gauge;
- accessory holder fitting.

| Code | Connection | Article use | | |
|---|---|---|---|---|
| 600251 | 3/4" M | 600051, 600351 | 1 | - |
| 600261 | 1" M | 600061, 600361 | 1 | - |
| 600271 | 1 1/4" M | 600071, 600371 | 1 | - |
| 600281 | 1 1/2" M | 600081, 600381 | 1 | - |
| 600291 | 2" M | 600091, 600391 | 1 | - |



Spare valve body without unions and probe holder for electronic mixing valve 6000 and 6003 series with threaded connections, 230 V.

| Code | Article use | | |
|---|---|---|---|
| F69798 | 600051, 600054, 600351 | 1 | - |
| F69799 | 600061, 600064, 600361 | 1 | - |
| F69801 | 600071, 600074, 600371 | 1 | - |
| F69803 | 600081, 600084, 600381, 600091, 600094, 600391 | 1 | - |



Spare valve body for electronic mixing valve 6000 and 6003 series with flanged connections.

| Code | Connection | | |
|---|---|---|---|
| F69393 | DN 65 - PN 16 | 1 | - |
| F69394 | DN 80 - PN 16 | 1 | - |



Spare temperature gauge.

| Code | Notes | | |
|---|---|---|---|
| R19101 | 0–80 °C | 1 | - |



Spare actuator for electronic mixing valve 6000 and 6003 series with threaded connections.

| Code | Notes | | |
|---|---|---|---|
| 645112 | 230 V AC - 3 point for 6000 and 6003 series | 1 | - |
| 645114 | 24 V AC - 3 point for 6000 and 6003 series | 1 | - |
| 645124 | 24 V AC/DC - 0–10 V with failsafe for 6003 series | 1 | - |



NEW

Spare actuator for electronic mixing valve 6000 series with flanged connections.

| Code | Notes | | |
|---|---|---|---|
| 600202 | 230 V AC - 3 point for 6000 and 6003 series | 1 | - |
| 600204 | 24 V AC/DC - 3 point for 6000 series | 1 | - |
| 600214 | 24 V AC/DC - 0–10 V without failsafe for 6003 series | 1 | - |
| 600224 | 24 V AC/DC - 0–10 V with failsafe for 6003 series | 1 | - |



Spare flow probe for electronic mixing valve and hybrid electronic mixing valve.

| Code | Notes | | |
|---|---|---|---|
| F69807 | 1/2" – 2" (LEGIOMIX 2.0)<br>3/4" – 1 1/4" (LEGIOMIX - LEGIOMIXevo) | 1 | - |
| F69381 | DN 65 – DN 80 (LEGIOMIX - LEGIOMIXevo) | 1 | - |



Probe for mixing water.

| Code | Notes | | |
|---|---|---|---|
| F69804 | 1 1/2" – 2" (LEGIOMIX - LEGIOMIXevo) | 1 | - |



NEW

Spare recirculation probe for electronic mixing valve and hybrid electronic mixing valve.

| Code | | | |
|---|---|---|---|
| F69591 | | 1 | - |



NEW

Spare contact probe holder for electronic mixing valve and hybrid electronic mixing valve.
Complete with syringe with conductor paste.

| Code | | | |
|---|---|---|---|
| F69531 | | 1 | - |

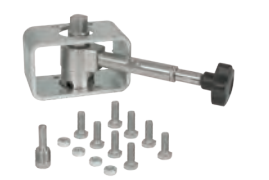

NEW

Spare actuator fixing kit for electronic mixing valve 6000 and 6003 series, with flanged connections.

| Code | | | |
|---|---|---|---|
| F0007682 | | 1 | - |



Spare regulator for electronic mixing valve 6000 series.

| Code | Notes | | |
|---|---|---|---|
| F69433 | 230 V | 1 | - |
| F0000961 | 24 V | 1 | - |



Spare electronic board for electronic mixing valve 6000 series.

| Code | Notes | | |
|---|---|---|---|
| F69752 | 230 V | 1 | - |
| F0000996 | 24 V | 1 | - |



Spare actuator for electronic mixing valve 6000 series with flanged connections.

| Code | Notes | | |
|---|---|---|---|
| F69395 | 230 V AC | 1 | - |
| F0000995 | 24 V AC | 1 | - |



Spare battery for electronic mixing valve 6000 series.

| Code | | | |
|---|---|---|---|
| F69888 | | 1 | - |



Manual opening lever for electronic mixing valve 6000 series.

| Code | Notes | | |
|---|---|---|---|
| F0001945 | DN 65 – DN 80 | 1 | - |



NEW

Spare regulator for electronic mixing valve 6003 series.
**Compatible with 6000 series controller replacement.**

| Code | Notes | | |
|---|---|---|---|
| F0007677 | 230 V | 1 | - |
| F0007683 | 24 V | 1 | - |



NEW

Spare terminal blocks kit for electronic mixing valve 6003 series.

| Code | Notes | | |
|---|---|---|---|
| F0007679 | 230 V | 1 | - |
| F0007678 | 24 V | 1 | - |



NEW

Spare rubber cable glands kit for electronic mixing valve 6003 series.

| Code | | | |
|---|---|---|---|
| F0007680 | | 1 | - |

# THERMOSTATIC REGULATOR FOR DOMESTIC HOT WATER RECIRCULATION CIRCUITS

## Multifunction thermostatic regulators



### 116

Thermostatic regulator for domestic hot water recirculation circuits.
**Complete with automatic thermostatic thermal disinfection function**.
With temperature gauge for checking circuit temperature.

Maximum working pressure: 16 bar
Disinfection temperature range: 70 °C
Material: dezincification resistant brass DR "low lead"

| Code | Connection | DN | Adjustment temperature (°C) | | |
|---|---|---|---|---|---|
| **116**240 | Rp 1/2" F | DN 15 | 35–60 | 1 | 10 |
| **116**250 | Rp 3/4" F | DN 20 | 35–60 | 1 | 10 |
| **116**260 | Rp 1" F | DN 25 | 35–65 | 1 | 5 |
| **116**270 | Rp 1 1/4" F | DN 32 | 35–65 | 1 | 5 |



### 116

Thermostatic regulator for domestic hot water recirculation circuits. Fitted for automatic or controlled thermal disinfection function.
With pocket for temperature gauge.

Maximum working pressure: 16 bar
Material: dezincification resistant brass DR "low lead"

| Code | Connection | DN | Adjustment temperature (°C) | | |
|---|---|---|---|---|---|
| **116**140 | Rp 1/2" F | DN 15 | 35–60 | 1 | 10 |
| **116**150 | Rp 3/4" F | DN 20 | 35–60 | 1 | 10 |
| **116**160 | Rp 1" F | DN 25 | 35–65 | 1 | 5 |
| **116**170 | Rp 1 1/4" F | DN 32 | 35–65 | 1 | 5 |



### 116

Thermostatic regulator for domestic hot water recirculation circuits.
Fitted for automatic or controlled thermal disinfection function.
With temperature gauge.

Maximum working pressure: 16 bar
Material: dezincification resistant brass DR "low lead"

Lead Free
WMTS-468
WM-40195

| Code | Connection | DN | Adjustment temperature (°C) | | |
|---|---|---|---|---|---|
| **116**141 AUS | Rp 1/2" F | DN 15 | 40–65 | 1 | 10 |
| **116**151 AUS | Rp 3/4" F | DN 20 | 40–65 | 1 | 10 |

## Thermostatic regulator with built-in check valve

### 116

Thermostatic regulator **with built-in check valve** for domestic hot water recirculation circuits.
**Complete with automatic thermostatic thermal disinfection function**.
With temperature gauge for circuit temperature check.

Maximum working pressure: 16 bar
Disinfection temperature range: 70 °C
Material: dezincification resistant brass DR "low lead"



| Code | Connection | DN | Adjustment temperature (°C) | | |
|---|---|---|---|---|---|
| **116**244 | 1/2" M | DN 20 | 35–60 | 1 | 10 |
| **116**254 | 3/4" M | DN 20 | 35–60 | 1 | 10 |

### 116

Thermostatic regulator **with built-in check valve** for domestic hot water recirculation circuits.
Fitted for automatic or controlled thermal disinfection function.
With pocket for temperature gauge.

Maximum working pressure: 16 bar
Material: dezincification resistant brass DR "low lead"



| Code | Connection | DN | Adjustment temperature (°C) | | |
|---|---|---|---|---|---|
| **116**144 | 1/2" M | DN 20 | 35–60 | 1 | 10 |
| **116**154 | 3/4" M | DN 20 | 35–60 | 1 | 10 |

## Standard thermostatic regulators



# 116

Thermostatic regulator for domestic hot water recirculation circuits.
With pocket for temperature gauge.

Maximum working pressure: 16 bar
Material: dezincification resistant brass DR "low lead"

| Code | Connection | DN | Adjustment temperature (°C) | | |
|---|---|---|---|---|---|
| **116**415 | Ø 15 | DN 15 | 40-65 | 1 | 10 |
| **116**420 | Ø 22 | DN 20 | 40–65 | 1 | 10 |



# 116

Thermostatic regulator for domestic hot water recirculation circuits.
With pocket for temperature gauge.

Maximum working pressure: 16 bar
Material: dezincification resistant brass DR "low lead"

| Code | Connection | DN | Adjustment temperature (°C) | | |
|---|---|---|---|---|---|
| **116**440 | Rp 1/2"F | DN 15 | 40–65 | 1 | 10 |
| **116**450 | Rp 3/4"F | DN 20 | 40–65 | 1 | 10 |



# 116

Thermostatic regulator for domestic hot water recirculation circuits.
Note (*) with WATERMARK certification
With temperature gauge for circuit temperature check.

Maximum working pressure: 16 bar
Material: dezincification resistant brass DR "low lead"

| Code | Connection | Notes | DN | Adjustment temperature (°C) | | |
|---|---|---|---|---|---|---|
| **116**441 | Rp 1/2"F | - | DN 15 | 40-65 | 1 | 10 |
| **116**451 | Rp 3/4"F | - | DN 20 | 40–65 | 1 | 20 |
| **116**451 AUS | Rp 3/4"F | (*) | DN 20 | 40–65 | 1 | 20 |

## Accessories for thermostatic regulators



# 116

Cartridge for thermal disinfection function controlled by an actuator.
For use with 116 series combined with 656 actuators.

| Code | | |
|---|---|---|
| **116**000 | 1 | 10 |



# 116

Accessory temperature gauge for thermostatic regulators 116 series.

Temperature gauge scale: 0–80 °C

| Code | | |
|---|---|---|
| **116**010 | 1 | 20 |



# 116

Insulation shell.
For 116 series thermostatic regulators.

| Code | Notes | | |
|---|---|---|---|
| CBN116140 | 1/2" - 3/4" | 1 | 20 |
| CBN116160 | 1" - 1 1/4" | 1 | - |



# 116

Insulation shell for 1164 thermostatic regulators (1/2"-3/4")

| Code | Notes | | |
|---|---|---|---|
| CBN116440 | 1/2" - 3/4" | 1 | 20 |

See page 174 for actuators

# MANIFOLDS FOR DOMESTIC WATER SYSTEMS

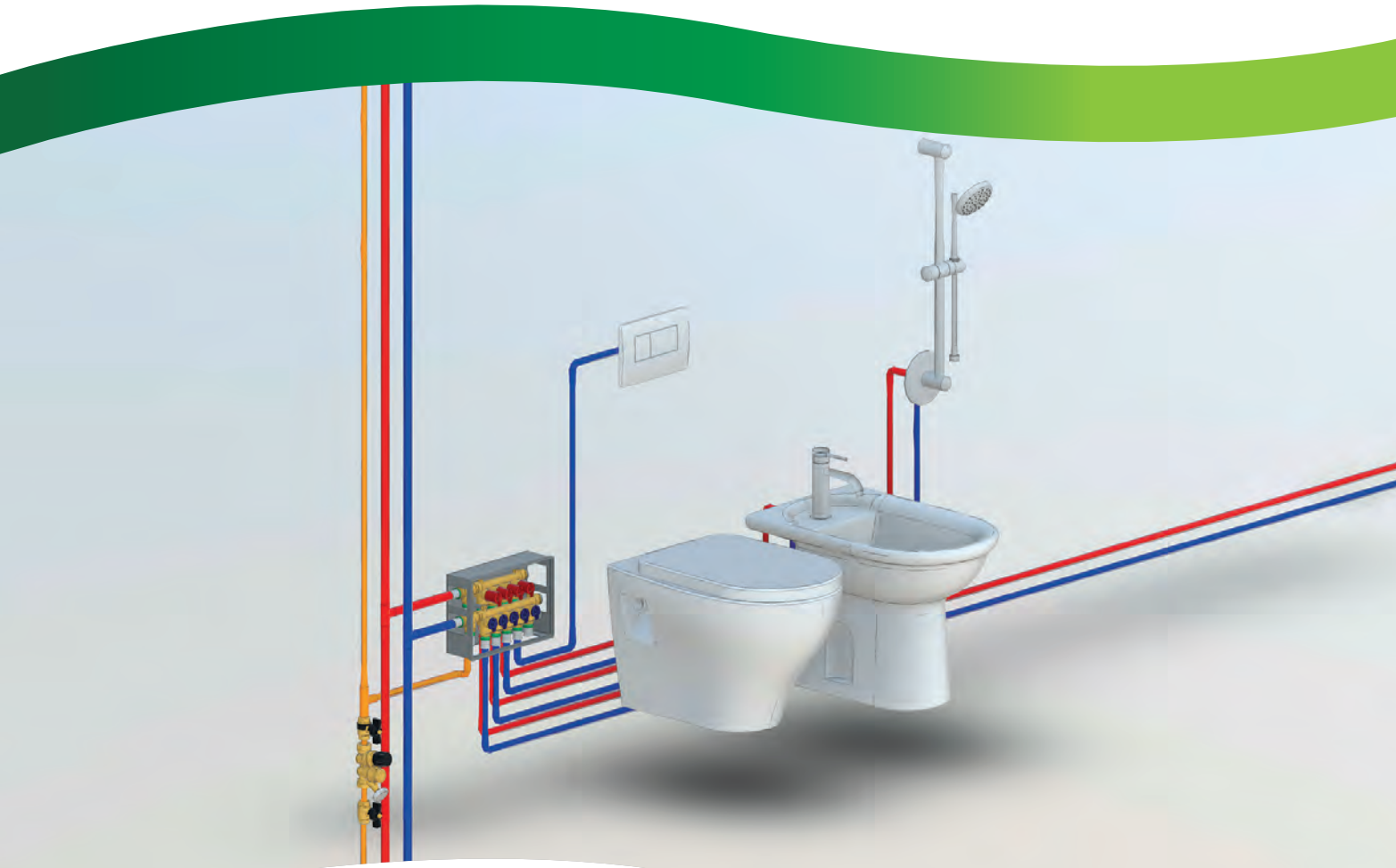

*Diagrams made with BIM families:* ***bim.caleffi.com***

**Distribution manifolds with individual shut-off valves**
**Distribution manifolds with main shut-off valves**
**Inspectable distribution manifolds with main shut-off valves**
**Unit with main shut-off valves**
**Inspectable unit with main shut-off valves**
**Accessories for manifolds 359 series**
**Accessories for modular manifolds**
**Spare parts for manifolds 359 series**
**Standard distribution manifold with individual shut-off valves**
**Accessories for standard manifold**

# MANIFOLDS FOR DOMESTIC WATER SYSTEMS

## Distribution manifolds with individual shut-off valves



### 359

Domestic water distribution manifolds pre-assembled in boxes **with individual shut-off valves**.
Complete with:
- pair of manifolds with shut-off knobs;
- box for manifolds (270 x 190 x 80 mm) complete with supports for manifolds and fixing brackets;
- protection cover for mounting;
- 2 end fitting caps with fixing clips.

PATENT PENDING

Maximum working pressure: 10 bar
Medium temperature range: 5–90 °C
Outlet centre distance: 35 mm
Material: brass

| Code | Hot outlet connection | Cold outlet connection | | |
|---|---|---|---|---|
| **359**410 | - 3 out., clip connection | - 4 out., clip connection | 1 | - |
| **359**510 | - 4 out., clip connection | - 5 out., clip connection | 1 | - |



### 359

Recessed door with push-to-open frame.
PATENT PENDING

| Code | | |
|---|---|---|
| **359**700 | 1 | - |



### 359

Aesthetic cover plate.
Complete with support plate.

Material: technopolymer

| Code | Finish | | |
|---|---|---|---|
| **359**801 | white RAL 9010 | 1 | - |



### 359

Aesthetic cover plate.
Complete with support plate.

Material: stainless steel

| Code | Finish | | |
|---|---|---|---|
| **359**802 | polished | 1 | - |
| **359**803 | brushed | 1 | - |

## Distribution manifolds with main shut-off valves



### 359

Domestic water distribution manifolds pre-assembled in boxes **with main shut-off valves**.
Complete with:
- pair of manifolds;
- box for manifolds (270 x 190 x 80) complete with supports for manifolds and fixing brackets;
- closure cover;
- 4 caps with fixing clips.

PATENT PENDING

Maximum working pressure: 10 bar
Medium temperature range: 5–90 °C
Outlet centre distance: 32 mm
Material: brass

| Code | Hot outlet connection | Cold outlet connection | | |
|---|---|---|---|---|
| **359**420 | - 3 out., clip connection | - 4 out., clip connection | 1 | - |



### 359

Plate with hidden knobs.

Finish: chrome plated

| Code | | |
|---|---|---|
| **359**902 | 1 | - |

## Inspectable distribution manifolds with main shut-off valves



### 359

**Inspectable** domestic water distribution manifolds pre-assembled in boxes **with main shut-off valves**.
Complete with:
- pair of manifolds;
- box for manifolds (270 x 190 x 80 mm) complete with supports for manifolds and fixing brackets;
- protection cover for mounting;
- 4 caps with fixing clips.

PATENT PENDING

Maximum working pressure: 10 bar
Medium temperature range: 5–90 °C
Outlet centre distance: 32 mm
Material: brass

| Code | Hot outlet connection | Cold outlet connection | | |
|---|---|---|---|---|
| **359**490 | - 3 out., clip connection | - 4 out., clip connection | 1 | - |



### 359

Aesthetic cover plate.
Complete with support plate.

Material: technopolymer

| Code | Finish | | |
|---|---|---|---|
| **359**801 | white RAL 9010 | 1 | - |

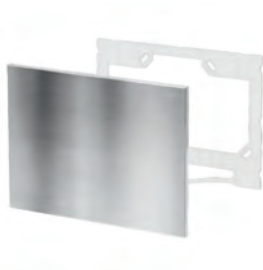

### 359

Aesthetic cover plate.
Complete with support plate.

Material: stainless steel

| Code | Finish | | |
|---|---|---|---|
| **359**802 | polished | 1 | - |
| **359**803 | brushed | 1 | - |

## Unit with main shut-off valves



### 359

Unit **with main shut-off valves**.
Complete with:
- valve unit;
- box for manifolds (190 x 190 x 80 mm) complete with supports for shut-off valve unit;
- protection cover;
- 4 caps with fixing clips.

PATENT PENDING

Maximum working pressure: 10 bar
Medium temperature range: 5–90 °C
Material: brass

| Code | | |
|---|---|---|
| **359**100 | 1 | - |



### 359

Plate with hidden knobs.

Finish: chrome plated

| Code | | |
|---|---|---|
| **359**902 | 1 | - |

## Inspectable unit with main shut-off valves



### 359

**Inspectable** unit **with main shut-off valves**.
Completet with:
- valve unit;
- box for manifolds (190x190x80 mm) with supports for shut-off valve unit;
- protection cover;
- 4 caps with fixing clips.

PATENT PENDING

Maximum working pressure: 10 bar
Medium temperature range: 5–90 °C
Material: brass

| Code | | |
|---|---|---|
| **359**190 | 1 | - |



### 359

Stainless steel aesthetic cover plate.

| Code | Finish | | |
|---|---|---|---|
| **359**892 | polished | 1 | - |
| **359**893 | brushed | 1 | - |

## Accessories for manifolds 359 series



### 359

Accessories for manifolds 359 series.

Medium temperature range: 5–90 °C
Maximum working pressure: 10 bar
Material: brass

| Code | Notes | | |
|---|---|---|---|
| **359**001 | tee with fixing clip | 1 | - |



### 359

Accessories for manifolds 359 series.

Material: technopolymer

| Code | Notes | | |
|---|---|---|---|
| **359**002 | blind plug with fixing clip | 1 | - |



### 359

Adapter for manifolds 359 series.

Maximum working pressure: 10 bar
Medium temperature range: 5–90 °C
Material: dezincification resistant brass DR "low lead"

| Code | Connection | Notes | | |
|---|---|---|---|---|
| **359**003 | 23 p. 1,5 | 23 p.1,5 fittting with fixing clip | 1 | - |
| **359**004 | 1/2" M | 1/2" fitting Ø 13 flat seat with fixing clip | 1 | - |
| **359**005 | 3/4" M | 3/4" fitting Ø 18 flat seat with fixing clip | 1 | - |
| **359**006 | 3/4" M | 3/4" fitting Ø 18 Euroconus with fixing clip | 1 | - |

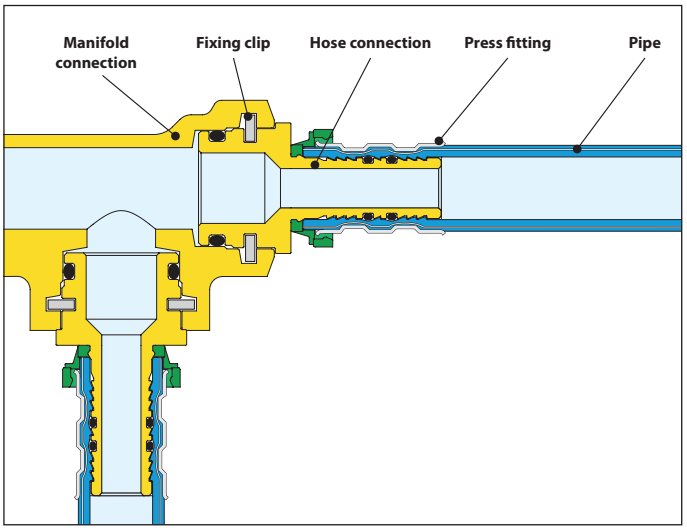




### 359

Multi-grip press fittings for multi-layer pipes with fixing clip.

| Code | Connection | Notes | | |
|---|---|---|---|---|
| **359**024 | Ø 16x2 press | - | 1 | 10 |
| **359**064 | Ø 20x2 press | - | 1 | 10 |
| **359**025 | Ø 16x2,25 press | - | 1 | 10 |
| **359**065 | Ø 20x2,25 press | - | 1 | 10 |
| **359**066 | Ø 20x2,5 press | - | 1 | 10 |
| **359**087 | Ø 26x3 press | only with H - TH profile crimp tool | 1 | 10 |

Can be used with H - TH - U profile crimp tool.
To use these fittings correctly, the multi-layer pipe must be calibrated with a Caleffi 679 series gauge before use.

Calibrator 679 series page 106

After calibrating the pipe with the calibrator, fit the pipe onto the fitting, taking care to insert it as far as it will go.
Check the pipe position through the peepholes.

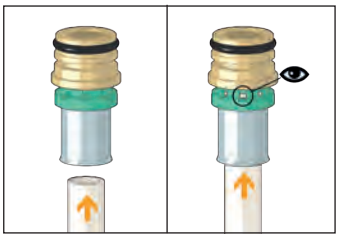

Crimp the pipe with the crimp tool until it clicks automatically.

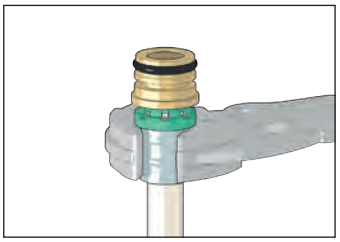

TH profile crimp tool

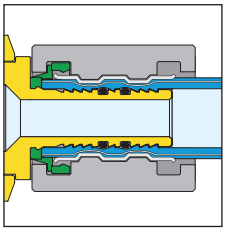

U profile crimp tool

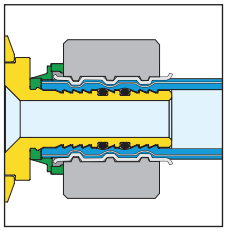

H profile crimp tool

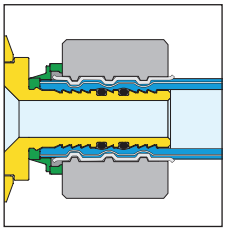

Insert the pipe complete with fitting into the seat on the manifold.

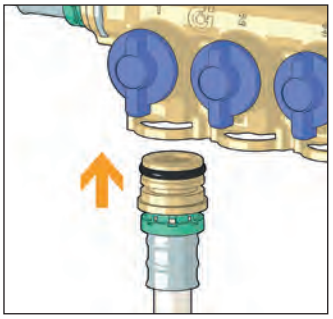

Fasten it with the dedicated fixing clip.

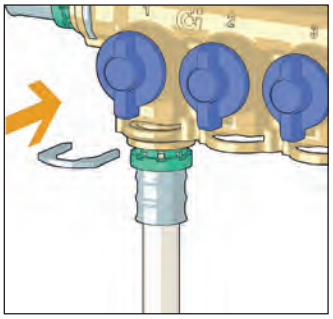

# Accessories for modular manifolds



## 359

Manifold with individual shut-off valves (red knobs).

| Code | Outlet connection | | |
|---|---|---|---|
| **359**330 | - 3 out., clip connection | 1 | - |
| **359**340 | - 4 out., clip connection | 1 | - |



## 359

Pair of brackets and fixing screws for hot water manifolds.

Material: stainless steel

| Code | | |
|---|---|---|
| **359**015 | 1 | - |



## 359

Long adapter with clip.

Material: brass

| Code | | |
|---|---|---|
| **359**017 | 1 | - |



## 359

Manifold with individual shut-off valves (blue knobs).

| Code | Outlet connection | | |
|---|---|---|---|
| **359**240 | - 4 out., clip connection | 1 | - |
| **359**250 | - 5 out., clip connection | 1 | - |



## 359

Pair of brackets and fixing screws for cold water manifolds.

Material: stainless steel

| Code | | |
|---|---|---|
| **359**016 | 1 | - |



## 359

Short adapter with clip.

Material: brass

| Code | | |
|---|---|---|
| **359**018 | 1 | - |

### Characteristic components

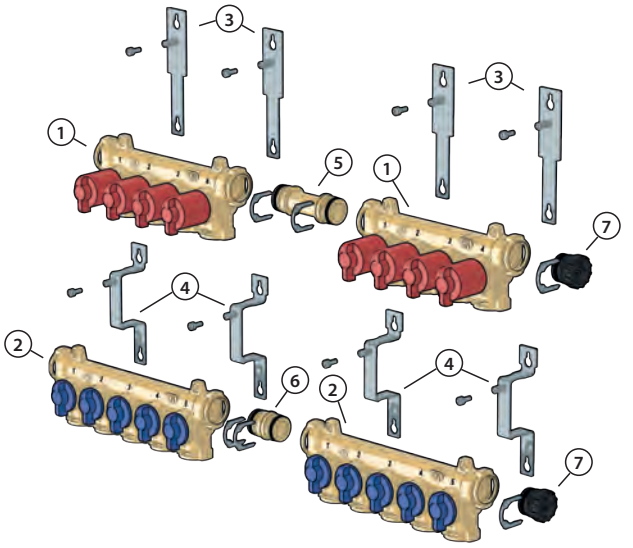


**1.** Hot water manifold with shut-off valves.
**2.** Cold water manifold with shut-off valves.
**3.** Pair of brackets and fixing screws for hot water manifold.
**4.** Pair of brackets and fixing screws for cold water manifold.
**5.** Long adapter with clip.
**6.** Short adapter with clip.
**7.** Blind plug with fixing clip.

### Possible modular manifold configuration

**10 + 8 manifold with side inlet**

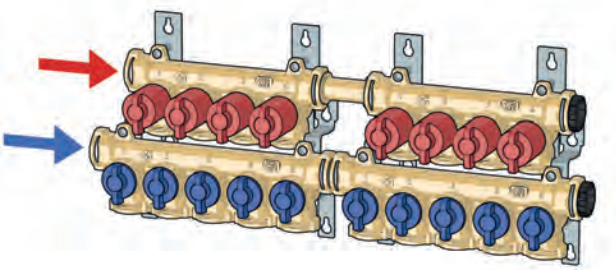

**10 + 8 manifold with central inlet**

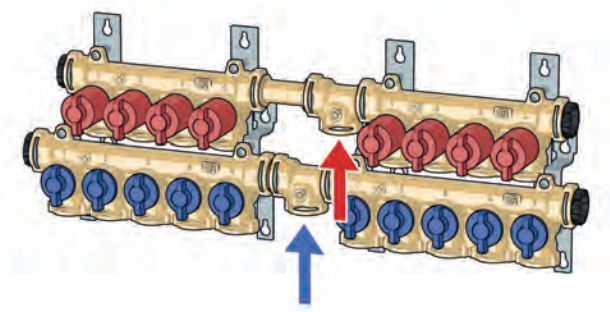

## Spare parts for manifolds 359 series



### 359
Manifold with main shut-off valve.

| Code | Outlet connection | | |
|---|---|---|---|
| **359**630 | - 3 out., clip connection | 1 | - |
| **359**640 | - 4 out., clip connection | 1 | - |



### 359
Manifold with inspectable main shut-off valve (blue knob).

| Code | Outlet connection | | |
|---|---|---|---|
| **359**290 | - 4 out., clip connection | 1 | - |



### 359
Manifold with inspectable main shut-off valve (red knob).

| Code | Outlet connection | | |
|---|---|---|---|
| **359**390 | - 3 out., clip connection | 1 | - |



### 359
Unit with main shut-off valve.

| Code | | | |
|---|---|---|---|
| **359**101 | | 1 | - |



### 359
Unit with inspectable main shut-off valve (blue knob).

| Code | | | |
|---|---|---|---|
| **359**192 | | 1 | - |



### 359
Unit with inspectable main shut-off valve (red knob).

| Code | | | |
|---|---|---|---|
| **359**193 | | 1 | - |



### 359
Fixing clip.

| Code | | | |
|---|---|---|---|
| **359**007 | | 100 | - |



Individual shut-off valves cartridge.
For 359 series.

| Code | | | |
|---|---|---|---|
| F0001305 | | 1 | - |



Main shut-off valves cartridge.
For 359 series.

| Code | | | |
|---|---|---|---|
| F0001306 | | 1 | - |



Cartridge for main shut-off valves (inspectable versions).
For 359 series.

| Code | | | |
|---|---|---|---|
| F0001721 | | 1 | - |



### 359
Spare protection cover.

| Code | | | |
|---|---|---|---|
| **359**010 | | 1 | - |



### 359
Box bottom.

| Code | Notes | | |
|---|---|---|---|
| **359**011 | spare bottom for 3+4 individual shut-off valves | 1 | - |
| **359**012 | spare bottom for 4+5 individual shut-off valves | 1 | - |
| **359**013 | spare bottom for 3+4 main shut-off valves | 1 | - |
| **359**014 | spare bottom for main shut-off valves | 1 | - |

## Standard distribution manifold with individual shut-off valves



### 354

Modular single distribution manifold with shut-off valves. Female flat seat connection.
For press-fittings.

Maximum working pressure: 10 bar
Medium temperature range: 5–100 °C
Outlet centre distance: 35 mm
Material: brass

| Code | Connection 1 | Connection 2 | Outlet connection | | |
|---|---|---|---|---|---|
| **354**252 | 3/4" F | 3/4" M | 1/2" M, Ø 13 - 2 out. | 2 | 30 |
| **354**253 | 3/4" F | 3/4" M | 1/2" M, Ø 13 - 3 out. | 2 | 20 |
| **354**254 | 3/4" F | 3/4" M | 1/2" M, Ø 13 - 4 out. | 2 | 10 |
| **354**255 | 3/4" F | 3/4" M | 1/2" M, Ø 13 - 5 out. | 2 | 10 |



### 354

Modular single distribution manifold with shut-off valves.

Maximum working pressure: 10 bar
Medium temperature range: 5–100 °C
Outlet centre distance: 35 mm
Material: dezincification resistant brass DR

| Code | Connection 1 | Connection 2 | Outlet connection | | |
|---|---|---|---|---|---|
| **354**052 | 3/4" F | 3/4" M | 23 p.1,5 M - 2 out. | 5 | 20 |
| **354**053 | 3/4" F | 3/4" M | 23 p.1,5 M - 3 out. | 5 | 20 |
| **354**054 | 3/4" F | 3/4" M | 23 p.1,5 M - 4 out. | 5 | 20 |
| **354**055 | 3/4" F | 3/4" M | 23 p.1,5 M - 5 out. | 5 | 20 |

## Accessories for standard manifold



### 360

Pair of stainless steel mounting brackets for distribution manifolds 354 series.
For plastic inspection boxes 360 and 362 series.

| Code | | |
|---|---|---|
| **360**210 | 1 | 10 |



### 3642

End fitting for air vent connection.
For distribution manifolds 356 and 357 series.

| Code | Connection 1 | Connection 2 | | |
|---|---|---|---|---|
| **3642**54 | 3/4" M | 1/2" F | 2 | - |



### 3641

Plug.
For distribution manifolds 356 and 357 series.

| Code | Connection | | |
|---|---|---|---|
| **3641**50 | 3/4" M | 2 | - |



### 5991

End fitting.
For distribution manifolds 349, 350, 592, 650 and 663 series.

| Code | Connection 1 | Connection 2 | | |
|---|---|---|---|---|
| **5991**54 | 3/4" F | 1/2" F | 2 | - |



### 5993

Plug.
For distribution manifolds 349, 350, 592, 650 and 663 series.

| Code | Connection | | |
|---|---|---|---|
| **5993**50 | 3/4" F | 2 | 10 |

# COMPONENTS FOR DOMESTIC WATER SYSTEMS



*Diagrams made with BIM families:* ***bim.caleffi.com***

**Inspectable strainer with shut-off function**
**Electrolytic anti-scale device with filter and magnet**
**Expansion groups for hot water storage heaters**
**Safety groups for hot water storage heaters**
**Temperature and pressure relief valves**
**Expansion vessels for domestic water systems**
**Flow limiter**
**Water hammer arrester**
**Anti-freeze safety devices**
**Vacuum breaker device**
**Standard ball valves with built-in check valves**

# STRAINERS

## Inspectable strainer with shut-off function



### 5771 NEW

Inspectable strainer with shut-off function.
**HEATING SYSTEMS APPLICATION:**
Maximum working pressure: 10 bar
Medium temperature range: 0–90 °C
Maximum percentage of glycol: 30 %
Medium: water, glycol solutions
**DOMESTIC WATER SYSTEMS APPLICATION:**
Maximum working pressure: 16 bar
Medium temperature range: 5–40 °C
PATENT PENDING

| Code | Connection | Strainer mesh size ∅ (mm) | Kv ($m^3/h$) | | |
|---|---|---|---|---|---|
| **5771**05 | 3/4" F | 0,16 | 5,5 | 1 | 12 |
| **5771**06 | 1" F | 0,16 | 5,5 | 1 | 12 |

**Operation**

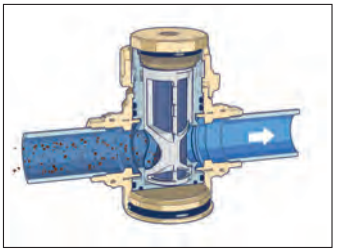

**Mesh extraction**

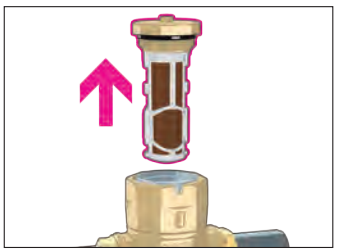

## Housing and strainer cartridges



### 5370

Housing for strainer cartridges of standard nominal size 10".
Transparent cup.

Maximum working pressure: 16 bar
Medium temperature range: 5–40 °C
Material: brass

| Code | Connection | | |
|---|---|---|---|
| **5370**50 | 3/4" F | 1 | - |
| **5370**60 | 1" F | 1 | - |



### 5370

Strainer cartridges for housing 5370 series.
537004 - washable nylon mesh - 60 µm.
537005 - stainless steel mesh - 50 µm.

Medium temperature range: 5–40 °C
△p max.: 3 bar

| Code | Notes | | |
|---|---|---|---|
| **5370**04 | washable nylon mesh - 60 µm | 1 | - |
| **5370**05 | stainless steel mesh - 50 µm | 1 | - |

# ANTI-SCALE DEVICE

## Electrolytic anti-scale device with filter and magnet



### 5377 NEW
### CALEFFI eCAL

Electrolytic anti-scale device with filter and magnet.
Complete with disassembly key.
PATENT PENDING

Maximum working pressure: 16 bar
Medium temperature range: 5–40 °C
Strainer mesh size Ø: 0,05 mm
Material: dezincification resistant brass DR "low lead"

| Code | Connection | Kv ($m^3/h$) | | |
|---|---|---|---|---|
| **5377**61 | 1" F | 5,1 | 1 | - |



### 5377 NEW
### CALEFFI eCAL

Spare self-contained cartridge for 5377 series.

| Code | | | |
|---|---|---|---|
| F0002304 | | 1 | - |

### Characteristic components

1. Body
2. Outer protection cover
3. Internal elements
4. Filter
5. Transparent filter container
6. Magnet
7. Pressure drain plug

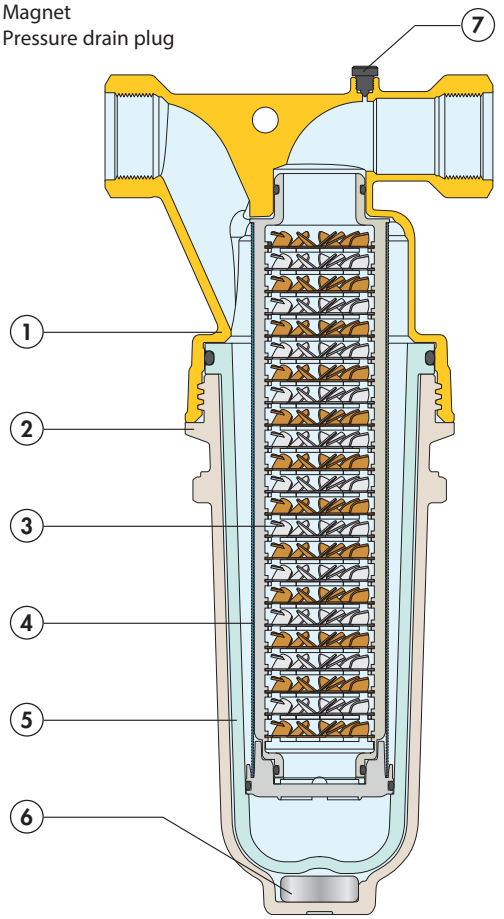


### Application diagrams

**Instantaneous DHW production system**

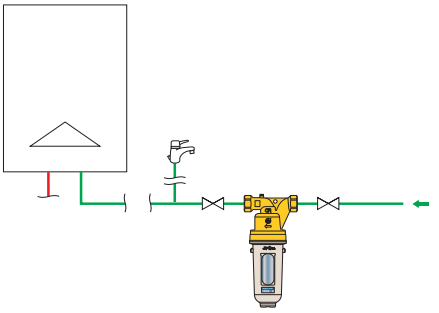

**System with DHW storage**

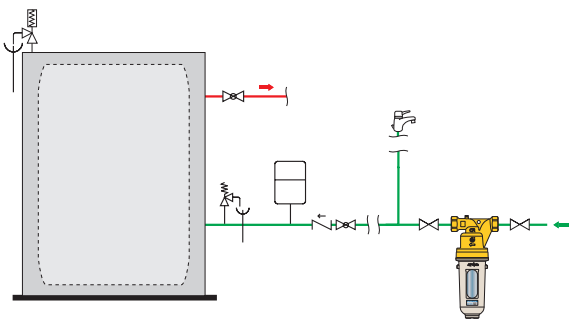

### Operating principle

Device operation is divided into three phases:

1) The water enters the device and passes through the filter mesh, which retains the impurities by mechanically selecting the particles according to their size. The large filter mesh surface with a mesh size of 50 µm makes the device less prone to clogging.

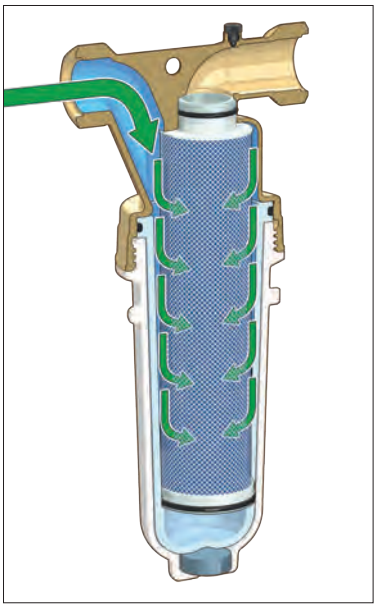

2) The water is channelled towards to bottom of the device, where the magnet is located. The magnet, which does not come into direct contact with the water, captures and retains the ferromagnetic impurities and helps to improve the efficiency of the device. The flow is reversed at the bottom and all the water is therefore channelled into the cartridge.

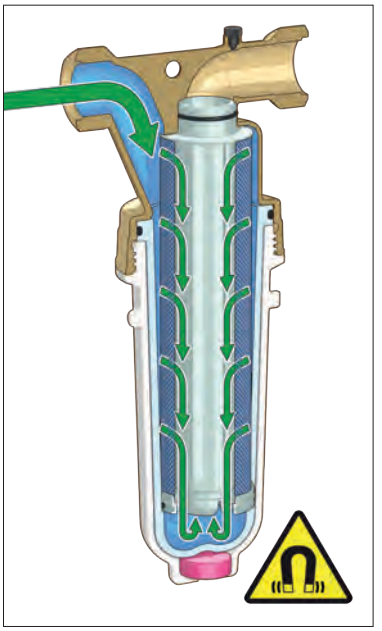

3) The water passes through the centre of the cartridge and comes into contact with the internal elements (Cu alloy - Zn/Ti), where the battery effect and vortex effect cause the first aragonite crystals to form.

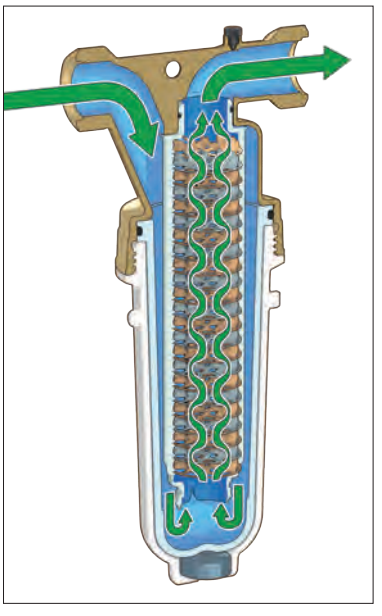

# SAFETY GROUPS FOR DOMESTIC WATER SYSTEMS

## Expansion groups for hot water storage heaters



### 5280 SICAL®

Expansion group for hot water storage heaters, for horizontal or vertical installation.
With shut-off cock and controllable check valve.
Max. volume of domestic water storage: 200 l.
Max. power of domestic water storage: 75 kW.
With insulation.
**Certified to EN 1488**.

Maximum working pressure: 10 bar
Medium temperature range: 2–40 °C
Material: brass

| Code | Connection | Pressure setting (bar) | | |
|---|---|---|---|---|
| **528**046 | 1/2″M | 6 | 1 | 5 |
| **528**048 | 1/2″M | 8 | 1 | 5 |
| **528**041 | 1/2″M | 10 | 1 | 5 |
| **528**056 | 3/4″M | 6 | 1 | 5 |
| **528**058 | 3/4″M | 8 | 1 | 5 |
| **528**051 | 3/4″M | 10 | 1 | 5 |



### 5281 SICAL®

Expansion group for hot water storage heaters, for horizontal or vertical installation.
With shut-off cock and controllable check valve.
Max. volume of domestic water storage: 1000 l.
Max. power of domestic water storage: 150 kW.
With insulation.
**Certified to EN 1488**.

Maximum working pressure: 10 bar
Medium temperature range: 2–40 °C
Material: brass

| Code | Connection | Pressure setting (bar) | | |
|---|---|---|---|---|
| **528**156 | 3/4″M | 6 | 1 | 5 |
| **528**158 | 3/4″M | 8 | 1 | 5 |
| **528**151 | 3/4″M | 10 | 1 | 5 |
| **528**166 | 1″M | 6 | 1 | 5 |
| **528**168 | 1″M | 8 | 1 | 5 |
| **528**161 | 1″M | 10 | 1 | 5 |



### 528

Expansion group for hot water storage heaters, for horizontal or vertical installation.
With shut-off valve and controllable check valve.
**Certified to EN 1488**.

Maximum working pressure: 10 bar
Medium temperature range: 2–40 °C
Material: brass

1.59/20511

| Code | Connection | Pressure setting (bar) | | |
|---|---|---|---|---|
| **528**518 | Ø 15 | 8 | 1 | 20 |
| **528**547 | 1/2″M | 7 | 1 | 20 |
| **528**548 | 1/2″M | 8 | 1 | 20 |
| **528**540 | 1/2″M | 10 | 1 | 20 |

## Safety groups for hot water storage heaters



### 5261

Hydraulic safety group for hot water storage heaters, with shut-off valve and controllable check valve.
**With stainless steel seat**.
**Certified to EN 1487**.

Maximum working pressure: 10 bar
Medium temperature range: 2–120 °C
Pressure setting: 7 bar
Material: brass
Finish: chrome plated

| Code | Inlet connection | Outlet connection | Maximum discharge rating (kW) | | |
|---|---|---|---|---|---|
| **526**142 | 1/2″M | 1/2″F | 4 | 1 | 30 |
| **526**152 | 3/4″M | 3/4″F | 10 | 1 | 30 |



### 5261

Hydraulic safety group for hot water storage heaters, with shut-off valve and controllable check valve.
**Certified to EN 1487**.

Maximum working pressure: 10 bar
Medium temperature range: 2–120 °C
Pressure setting: 7 bar
Material: brass
Finish: chrome plated

| Code | Inlet connection | Outlet connection | Maximum discharge rating (kW) | | |
|---|---|---|---|---|---|
| **526**140 | 3/4″M | 1/2″F | 4 | 1 | 30 |
| **526**150 | 3/4″M | 3/4″F | 10 | 1 | 30 |



## 319

Plastic discharge tundish.
For safety units 5261 series.

| Code | Connection | | |
|---|---|---|---|
| **319**601 | 1″F | 1 | 30 |



## 5261

Hydraulic safety group for hot water storage heaters, with shut-off valve and controllable check valve. For horizontal installation.
**With stainless steel seat**.
**Certified to EN 1487**.

Maximum working pressure: 10 bar
Medium temperature range: 2–120 °C
Pressure setting: 7 bar
Material: brass
Finish: chrome plated

| Code | Inlet connection | Outlet connection | Notes | Maximum discharge rating (kW) | | |
|---|---|---|---|---|---|---|
| **526**153 | 3/4″M | 3/4″F | - | 10 | 1 | 10 |
| **526**163 | 1″M | 1″F | not chrome plated, without HY mark | 18 | 1 | 10 |



## 6509

Connection kit for unit code 526163.

| Code | Inlet connection | Outlet connection | | |
|---|---|---|---|---|
| **650**972 | 1 1/4″F | 1″M | 1 | 5 |



## 5261

Hydraulic safety group for hot water storage heaters, with shut-off valve and controllable check valve.
For horizontal installation, with standard seat.
**Certified to EN 1487**.

Maximum working pressure: 10 bar
Medium temperature range: 2–120 °C
Maximum discharge rating: 10 kW
Pressure setting: 7 bar
Material: brass
Finish: chrome plated

| Code | Inlet connection | Outlet connection | | |
|---|---|---|---|---|
| **526**151 | 3/4″M | 3/4″F | 1 | 10 |



## 5265

Safety group for hot water storage heaters, with shut-off valve and check valve.
**Certified to EN 1487**.

Maximum working pressure: 10 bar
Medium temperature range: 2–120 °C
Maximum discharge rating: 10 kW
Pressure setting: 7 bar
Material: brass

| Code | Connection | DN | | |
|---|---|---|---|---|
| **526**554 | 3/4″F | DN 20 | 1 | 30 |

# SAFETY RELIEF VALVES FOR DOMESTIC WATER SYSTEMS

## Temperature and pressure relief valves



### 309

Temperature and pressure relief valve.
**For domestic water system, to protect the hot water storage.**
**Certified to EN 1490 with settings: 4 - 7 - 10 bar.**

Temperature setting: 90 °C
Material: dezincification resistant brass DR

CE 2797 WRAS APPROVED PRODUCT CERTIFICATION MARK

| Code | Main connection | Drain connection | Pressure setting (bar) | Maximum discharge rating (kW) | Probe/ cable length (mm) | | |
|---|---|---|---|---|---|---|---|
| **309**430 | 1/2" M | Ø 15 | 3 | 10 | 100 | 1 | 20 |
| **309**440 | 1/2" M | Ø 15 | 4 | 10 | 100 | 1 | 20 |
| **309**460 | 1/2" M | Ø 15 | 6 | 10 | 100 | 1 | 20 |
| **309**470 | 1/2" M | Ø 15 | 7 | 10 | 100 | 1 | 20 |
| **309**400 | 1/2" M | Ø 15 | 10 | 10 | 100 | 1 | 20 |
| **309**542 | 3/4" M | Ø 15 | 4 | 10 | 100 | 1 | 20 |
| **309**530 | 3/4" M | Ø 22 | 3 | 25 | 100 | 1 | 20 |
| **309**560 | 3/4" M | Ø 22 | 6 | 25 | 100 | 1 | 20 |
| **309**570 | 3/4" M | Ø 22 | 7 | 25 | 100 | 1 | 20 |
| **309**500 | 3/4" M | Ø 22 | 10 | 25 | 100 | 1 | 20 |
| **309**435 | 1/2" M | Ø 15 | 3 | 10 | 200 | 1 | 20 |
| **309**445 | 1/2" M | Ø 15 | 4 | 10 | 200 | 1 | 20 |
| **309**465 | 1/2" M | Ø 15 | 6 | 10 | 200 | 1 | 20 |
| **309**475 | 1/2" M | Ø 15 | 7 | 10 | 200 | 1 | 20 |
| **309**405 | 1/2" M | Ø 15 | 10 | 10 | 200 | 1 | 20 |
| **309**547 | 3/4" M | Ø 15 | 4 | 10 | 200 | 1 | 20 |
| **309**535 | 3/4" M | Ø 22 | 3 | 25 | 200 | 1 | 20 |
| **309**565 | 3/4" M | Ø 22 | 6 | 25 | 200 | 1 | 20 |
| **309**575 | 3/4" M | Ø 22 | 7 | 25 | 200 | 1 | 20 |
| **309**505 | 3/4" M | Ø 22 | 10 | 25 | 200 | 1 | 20 |



### 309

Temperature and pressure relief valve.
**For domestic water system, to protect the hot water storage.**
**For systems with nominal pressure of 400 kPa.**

Temperature setting: 95 °C
Pressure setting: 6 bar
Material: dezincification resistant brass DR

SABS APPROVED SANS 198

| Code | Main connection | Drain connection | Probe/cable length (mm) | | |
|---|---|---|---|---|---|
| **309**563 | 3/4" M | Ø 22 | 100 | 1 | 20 |

# CONTROL DEVICES FOR DOMESTIC WATER SYSTEMS

## Expansion vessels for domestic water systems




### 5557

Welded expansion vessel, for hot water systems, EC certification.
Bladder diaphragm.
Conforms to EN 13831 standard.

Maximum working pressure: 10 bar
System working temperature range: -10–100 °C
Diaphragm temperature range: -10–100 °C

CE 1370

| Code | Connection | Volume (l) | Pre-charge (bar) | | |
|---|---|---|---|---|---|
| **555**702 | 1/2" M | 2 | 2,5 | 4 | - |
| **555**705 | 3/4" M | 5 | 2,5 | 1 | - |
| **555**708 | 3/4" M | 8 | 2,5 | 1 | - |

## Flow limiter




### 534

Flow limiter.

Maximum working pressure: 12 bar
Medium temperature range: 2–80 °C
Range △p: 1–10 bar
Material: brass

| Code | Notes | Nominal flow rate (l/min) | Finish | | |
|---|---|---|---|---|---|
| **534**102 | M - F direction | 2 | olive green | 1 | - |
| **534**104 | M - F direction | 4 | grey | 1 | - |
| **534**105 | M - F direction | 5 | yellow | 1 | - |
| **534**106 | M - F direction | 6 | black | 1 | - |
| **534**108 | M - F direction | 8 | white | 1 | - |
| **534**110 | M - F direction | 10 | light blue | 1 | - |
| **534**112 | M - F direction | 12 | red | 1 | - |
| **534**116 | M - F direction | 16 | blue | 1 | - |
| **534**118 | M - F direction | 18 | lilac | 1 | - |
| **534**202 | F - M direction | 2 | olive green | 1 | - |
| **534**204 | F - M direction | 4 | grey | 1 | - |
| **534**205 | F - M direction | 5 | yellow | 1 | - |
| **534**206 | F - M direction | 6 | black | 1 | - |
| **534**208 | F - M direction | 8 | white | 1 | - |
| **534**210 | F - M direction | 10 | light blue | 1 | - |
| **534**212 | F - M direction | 12 | red | 1 | - |
| **534**216 | F - M direction | 16 | blue | 1 | - |
| **534**218 | F - M direction | 18 | lilac | 1 | - |

## Water hammer arrester



### 525 ANTISHOCK

Water hammer arrester.
PTFE seal on thread.

Maximum working pressure: 10 bar
Medium temperature range: 2–90 °C
Material: brass

| Code | Connection | Notes | Finish | | |
|---|---|---|---|---|---|
| **525**040 | 1/2" M | certified WRAS only | chrome plated | 1 | 25 |
| **525**041 | 1/2" M | - | yellow brass | 1 | 25 |



### 5251 ANTISHOCK

Water hammer arrester for fitting under sinks, wash-hand basins and washing machine (3/4").

Maximum working pressure: 10 bar
Medium temperature range: 2–90 °C
Material: brass

| Code | Connection | Notes | Finish | | |
|---|---|---|---|---|---|
| **525**130 | 3/8" F captive nut | Certified WRAS only | chrome plated | 1 | 50 |
| **525**131 | 3/8" F captive nut | | yellow brass | 1 | 50 |
| **525**150 | 3/4" F captive nut | Certified WRAS only | chrome plated | 1 | 25 |
| **525**151 | 3/4" F captive nut | | yellow brass | 1 | 25 |

## Anti-freeze safety devices



### 603

Garden tap, ball type, **with anti-freeze safety device**.
Lever and fixing nut made of stainless steel.
Hose connection for Ø 15 mm pipe.
PATENT

Maximum working pressure: 10 bar
Ambient temperature range: -30–90 °C
Opening temperature: 3 °C
Closing temperature: 4 °C
Finish: chrome plated
Material: brass

| Code | Pipe connection | Connection | Notes | | |
|---|---|---|---|---|---|
| **603**450 | 1/2" M | 3/4" M | with hose connection | 1 | 10 |



### 603

Antifreeze group spare part.
For code 603450.

Finish: chrome plated

| Code | | |
|---|---|---|
| F89046/C | 1 | - |

## Vacuum breaker device



### 3040

Vacuum breaker device for domestic water systems.
For the protection of hot and cold water storage tanks.

Maximum working pressure: 14 bar
Medium temperature range: 0–120 °C
Material: dezincification resistant brass DR "low lead"

| Code | Connection | | |
|---|---|---|---|
| **304040** | 1/2" M | 1 | 50 |
| **304050** | 3/4" M | 1 | 50 |

# CHECK VALVES

## Standard ball valves with built-in check valves



### 3230 BALLSTOP

Ball valve with built-in check valve, female connections.
Butterfly handle.

Maximum working pressure: 16 bar
Medium temperature range: 5–90 °C
Material: brass

| Code | Connection | | |
|---|---|---|---|
| **323**040 | 1/2″F | 10 | - |
| **323**050 | 3/4″F | 10 | - |
| **323**062 | 1″F | 4 | - |



### 3230 BALLSTOP

Ball valve with built-in check valve, female connections.
Lever handle.

Maximum working pressure: 16 bar
Medium temperature range: 5–90 °C
Material: brass

| Code | Connection | | |
|---|---|---|---|
| **323**060 | 1″F | 4 | - |
| **323**070 | 1 1/4″F | 4 | - |
| **323**080 | 1 1/2″F | 2 | - |
| **323**090 | 2″F | 1 | - |



### 332 BALLSTOP

Ball valve with built-in check valve, male - female connections.
Butterfly handle.

Maximum working pressure: 16 bar
Medium temperature range: 5–90 °C
Material: brass

| Code | Inlet connection | Outlet connection | | |
|---|---|---|---|---|
| **332**400 | 1/2″M | 1/2″F | 10 | - |



### 333 BALLSTOP

Ball valve with built-in check valve, female - captive nut connection.
Drilled anti-tamper safety nut, butterfly handle.

Maximum working pressure: 16 bar
Medium temperature range: 5–90 °C
Material: brass

| Code | Inlet connection | Outlet connection | | |
|---|---|---|---|---|
| **333**400 | 1/2″F | 3/4″F captive nut | 10 | - |
| **333**500 | 3/4″F | 3/4″F captive nut | 10 | - |



### 334 BALLSTOP

Ball valve with built-in check valve, male - captive nut connection.
Drilled anti-tamper safety nut, butterfly handle.

Maximum working pressure: 16 bar
Medium temperature range: 5–90 °C
Material: brass

| Code | Inlet connection | Outlet connection | | |
|---|---|---|---|---|
| **334**400 | 1/2″M | 3/4″F captive nut | 10 | - |
| **334**500 | 3/4″M | 3/4″F captive nut | 10 | - |

# BACKFLOW PREVENTION DEVICES

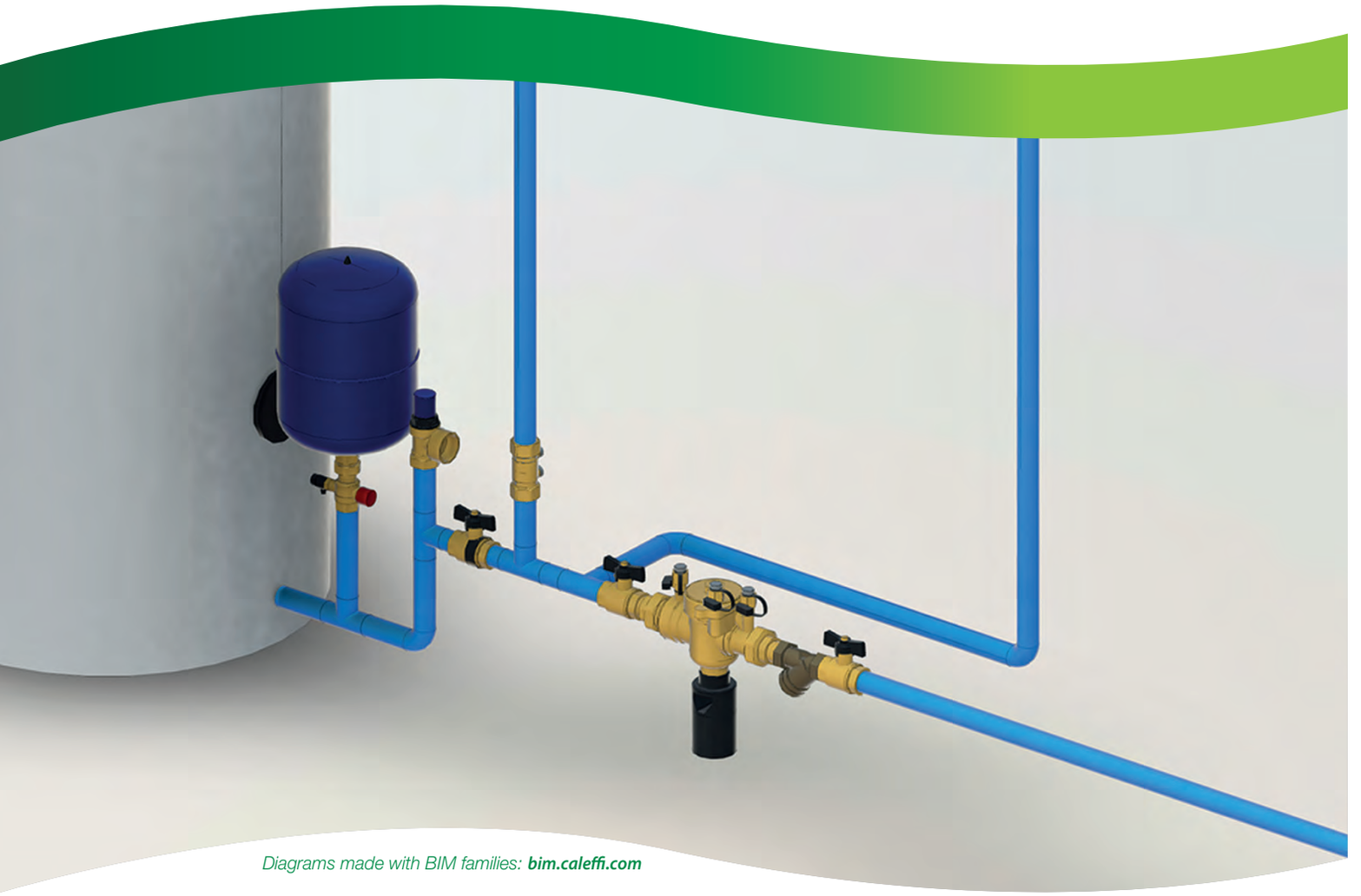

*Diagrams made with BIM families:* ***bim.caleffi.com***



**Backflow prevention devices**
**Strainers**
**Check valves**

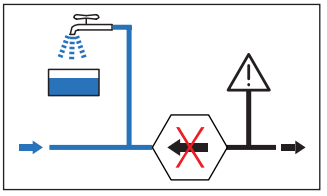

The following pages are extracted from the specific Monographic Guide, which concerns the problem of pollution of water supplies from backflow and presents the range of Caleffi products specifically designed to prevent this problem.
The materials of the components and their performance characteristics meet the specific regulatory and safety requirements of water supply systems.

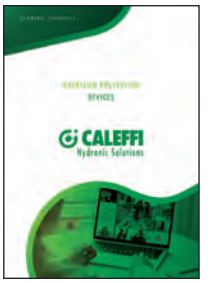


# POLLUTION OF WATER SUPPLIES - NORMATIVE REFERENCES

Pollution is defined as any relative degradation of the quality of potable water.
European standard **EN 1717:2000** "*Protection against pollution of potable water in water installations and general requirements of devices to prevent pollution by backflow*" is the reference point as regards the prevention of pollution of public water supplies caused the backflow of fluid from private systems downstream.

The above standard is applied in conjunction with **EN 806:2012** "*Specifications for installations inside buildings conveying water for human consumption.*" that indicates the requirements for design, operation and maintenance.
Both these European reference standards should be applied in conjunction with the applicable national standards and regulations.
Installations must be designed and maintained in such a way that they do not cause pollution of the public water supply or of the internal system by backflow of any type of substance considered hazardous.

**The standard EN 1717** classifies fluids contained in installations into five categories according to the degree of risk they pose to human health; these categories range from 1, with no human health hazard, to 5, the most hazardous.

**Category 1:**
Water to be used for human consumption coming directly from a potable water distribution system.

**Category 2:**
Fluid presenting no human health hazard, as per 1, the quality of which can have undergone a change in taste, odour, colour or temperature.

**Category 3:**
Fluid representing some human health hazard due to the presence of one or more harmful substances.

**Category 4:**
Fluid presenting a human health hazard due to the presence of one or more "toxic" or "very toxic" substances or one or more radioactive, mutagenic or carcinogenic substances.

**Category 5:**
Fluid presenting a human health hazard due to the presence of microbiological or viral elements.

According to this classification, suitable backflow prevention devices must be fitted in water distribution circuits.

**EN 1717 lists the operating principle and minimum requirements of devices designed to protect the public water supply from the backflow of fluids belonging to one of these five categories.**

**Protection devices are grouped in eight Families, identified by the letters A, B, C, D, E, G, H, L, each of which may have one or more variants called Types, also identified with the letters A, B, C, or D. EN 1717 specifies for each Type of device the minimum and maximum fluid category and the conditions in which it may be used for to protect the installation against backflow.**

The sequence of appliances, including protection device, filters, check valves, shut-off valves, pressure test ports, air gaps, etc. that together comprise the backflow protection, is defined as the **Protection Unit**.
The Protection Point is defined as the point in the system in which the Protection Unit is applied.

The generic symbol used in EN 1717 to identify the Protection Unit is a hexagon containing the letters indicating the protection Family and Type, as shown in the following figure:




Here below are some examples of Protection Units with the relative sequences of devices required by EN 1717.

Protection unit: Family B, Type A

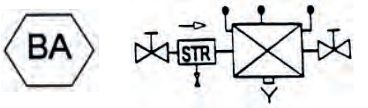


Protection unit: Family C, Type Aa

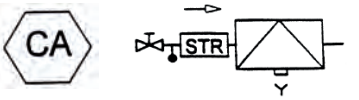


Protection unit: Family E, Type A

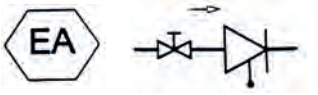


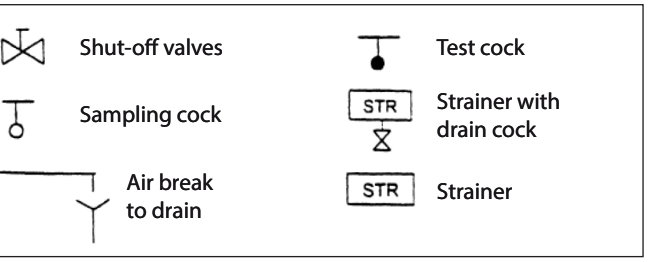


The indications in EN 1717 may be applied to all domestic, industrial/commercial and non domestic installations connected to the public potable water supply:

- domestic installations in residential or similar buildings, such as homes, hotels, schools, offices, hostels, etc.: kitchen sinks, hand basins, baths, showers, WCs, domestic hot water systems, domestic washing machines and dishwashers, garden irrigation systems, systems with low concentrations of additives that are not harmful to human health,such as water treatment, conditioning systems, etc.;
- in industrial and commercial installations the standard applies to all applications of potable water with similar use to a domestic installation, excluding therefore process water; also fire fighting, centralised heating or irrigation systems;
- non domestic installations for professional uses of water, for example, industries, commerce, agriculture, clinics, public and private swimming pools and thermal baths.

# POLLUTION OF WATER SUPPLIES - NORMATIVE REFERENCES

**Backflow**
Potable water from the mains supply may be subject to pollution caused mainly by the contaminated fluids flowing back from plumbing installations connected directly to the mains supply. Backflow can be attributed to a variation in the pressure difference that causes a consequent inversion of the normal direction of flow at certain point of the installation. This phenomenon, termed "backflow", occurs when:
a) the pressure in the mains system is less than that in the plumbing circuit receiving the supply (back syphonage). This situation can occur, for example, due to a break in the pipework of the mains supply and the consequent maintenance work, or when significant quantities of water are drawn by other users connected upstream, such as fire-fighting systems.
b) the pressure in the plumbing circuit receiving the supply rises (back pressure) due, for example, to water being pumped from a well.

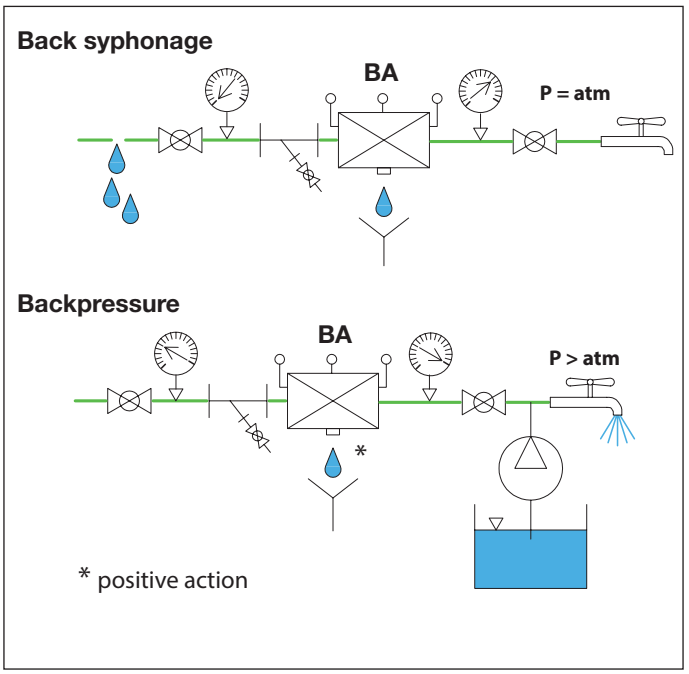


**Risk assessment**
Given the potential dangers of the phenomenon and the requirements of current regulations, the risk of pollution caused by backflow must be assessed on the basis of the type of system and the characteristics of the fluid that flows inside it.

A suitable backflow prevention device must be selected on the basis of the assessment performed by the system designer and the mains supplier. The device must be located along the supply line at the points at risk of backflow which would be hazardous to human health.

In addition to consultation of the European standard EN 1717, it is always necessary to consult the water supplier and the specific national regulations as, depending the type of installation, there may be more restrictive or more permissive derogations from the European standard.

In situations where there are fluids present that pose different degrees of hazard, backflow prevention should consider the most hazardous of these fluids. In the case of fluids that are exceptionally hazardous, it will be necessary to assess additional technical parameters.

In the case of applications where it is not possible to verify the risk level, it is necessary to hypothesise the greatest risk. The "Protection Matrix" tables reported in the list Monographic Guide various types of installation and the corresponding fluid categories.

**Protection Unit - Product standards - Caleffi devices**
Tables 1 and 2 below list all the Protection Units defined in EN 1717, with the relative fluid categories, the product standards and the corresponding products in the Caleffi catalogue.

**Table 2**

| Devices | Category | Authorised level of the Protection Unit |
|---|---|---|
| Tap with spray outlet over handbasins, sinks, showers, baths; excluding WCs and bidets | 5 | Protection unit for category 2 and EB, ED, HC |
| Tub with water inlet below the rim of the tub (b) | 5 | Protection unit for category 3 |
| Draw-off tap for hose connection (a b) | 5 | Protection unit for category 3 |
| Over ground or in-ground irrigation system (b) | 5 | Protection unit for category 4 |
| (a) Used for washing, cleaning or garden irrigation<br>(b) The Protection Unit must be installed above the maximum operating level | | |

**Table 1**

| | | Fluid category | | | | | | |
|---|---|---|---|---|---|---|---|---|
| Family Type | EN 1717 Protection unit | 1 | 2 | 3 | 4 | 5 | Product standard | Caleffi series |
| BA | Backflow preventer with controllable reduced pressure zone | • | • | • | • | - | EN 12729 | 580, 574, 575 |
| CA | Backflow preventer with different non controllable pressure zones | • | • | • | - | - | EN 14367 | 573 |
| EA | Controllable anti-pollution check valves from DN 6 to DN 250 | • | • | - | - | - | EN 13959 | 3045, 3046 |
| EB | Non-controllable anti-pollution check valves from DN 6 to DN 250 | ■ | | | | | EN 13959 | 3047 |
| EC | Controllable anti-pollution double check valves from DN 6 to DN 250 | • | • | - | - | - | EN 13959 | |
| ED | Non-controllable anti-pollution double check valves from DN 6 to DN 250 | ■ | | | | | EN 13959 | |

Units with atmospheric vent must not be installed in zones at risk of flooding (for example, AA, BA, CA, GA, GB...)
• Covers the risk - Does not cover the risk ■ Only for certain sanitary uses (see Table 2)

# BACKFLOW PREVENTION DEVICES

## CAb type backflow prevention devices



### 572

Non controllable backflow preventer with different pressure zones for wall mounted boilers.
**CAb type**.
**Certified to EN 14367**.

Medium temperature range: 5–40 °C
Nominal pressure: PN 10
Material: brass

| Code | Connection | | |
|---|---|---|---|
| **572**106 | Ø 6 copper pipe connections | 1 | 50 |

## CAa type backflow prevention devices



### 573

Non controllable backflow preventer with different pressure zones. Normally closed model.
With threaded outlet.

Medium temperature range: 5–65 °C
Nominal pressure: PN 10
Material: brass

| Code | Connection | | |
|---|---|---|---|
| **573**405 | 1/2″F | 1 | 20 |
| **573**505 | 3/4″F | 1 | 20 |



### 573

Non controllable backflow preventer with different pressure zones.
**CAa type**.
**Certified to EN 14367**.

Medium temperature range: 5–65 °C
Nominal pressure: PN 10
Material: brass

| Code | Connection | | |
|---|---|---|---|
| **573**415 | 1/2″F | 1 | 10 |
| **573**515 | 3/4″F | 1 | 10 |

# BA type backflow prevention devices



### 574

Controllable, reduced pressure zone backflow preventer, compact version.
**Upstream of the backflow preventer is mandatory to install a strainer 577 series.**
**BA type.**
**Certified to EN 12729.**

Differential operating pressure: 14 kPa
Medium temperature range: 5–65 °C
Nominal pressure: PN 10
Material: dezincification resistant brass DR "low lead"

| Code | Connection | | |
|---|---|---|---|
| **574**004 | 1/2″M | 1 | 10 |



### 574

Controllable, reduced pressure zone backflow preventer, standard version.
**Upstream of the backflow preventer is mandatory to install a strainer 577 series.**
**BA type.**
**Certified to EN 12729.**

Differential operating pressure: 14 kPa
Medium temperature range: 5–65 °C
Nominal pressure: PN 10
Material: dezincification resistant brass DR "low lead"

| Code | Connection | | |
|---|---|---|---|
| **574**040 | 1/2″M | 1 | - |
| **574**050 | 3/4″M | 1 | - |
| **574**006 | 1″M | 1 | - |



## 574

Controllable, reduced pressure zone backflow preventer, standard version.
**Upstream of the backflow preventer is mandatory to install a strainer 577 series.**
**BA type.**
**Certified to EN 12729.**

Differential operating pressure: 14 kPa
Medium temperature range: 5–65 °C
Nominal pressure: PN 10
Material: dezincification resistant brass DR "low lead"

| Code | Connection | | |
|---|---|---|---|
| **574**600 | 1" M | 1 | - |
| **574**700 | 1 1/4" M | 1 | - |
| **574**008 | 1 1/2" M | 1 | - |



## 574

Controllable, reduced pressure zone backflow preventer, standard version.
Bronze body.
**Upstream of the backflow preventer is mandatory to install a strainer 577 series.**
**BA type.**
**Certified to EN 12729.**

Differential operating pressure: 14 kPa
Medium temperature range: 5–65 °C
Nominal pressure: PN 10
Material: bronze

| Code | Connection | | |
|---|---|---|---|
| **574**800 | 1 1/2" M | 1 | - |
| **574**900 | 2" M | 1 | - |



## 575

Controllable, reduced pressure zone backflow preventer. Bronze body. Flanged connections.
To be coupled with flat counterflanges EN 1092-1.
**Upstream of the backflow preventer is mandatory to install a strainer 577 series.**
**BA type.**
**Certified to EN 12729.**

Differential operating pressure: 14 kPa
Medium temperature range: 5–65 °C
Nominal pressure: PN 10
Material: bronze

| Code | Connection | | |
|---|---|---|---|
| **575**005 | DN 50 - PN 10 | 1 | - |
| **575**006 | DN 65 - PN 10 | 1 | - |
| **575**008 | DN 80 - PN 10 | 1 | - |
| **575**010 | DN 100 - PN 10 | 1 | - |



## 5751 NEW

Controllable, reduced pressure zone backflow preventer, standard version.
Flanged connections.
To be coupled with flat counterflanges EN 1092-1.
**BA type.**
**Upstream of the backflow preventer is mandatory to install a strainer 579 series.**
**Certified to EN 12729.**

Differential operating pressure: 14 kPa
Medium temperature range: 5–65 °C
Nominal pressure: PN 10
Material: cast iron
Finish: coated

| Code | Connection | | |
|---|---|---|---|
| **575**105 | DN 50 - PN 10 | 1 | - |
| **575**106 | DN 65 - PN 10 | 1 | - |
| **575**108 | DN 80 - PN 10 | 1 | - |
| **575**110 | DN 100 - PN 10 | 1 | - |



## 575

Controllable, reduced pressure zone backflow preventer.
To be coupled with flat counterflanges EN 1092-1.
**Upstream of the backflow preventer is mandatory to install a strainer 579 series.**
**BA type.**
**Certified to EN 12729.**

Differential operating pressure: 14 kPa
Medium temperature range: 5–60 °C
Nominal pressure: PN 10
Material: cast iron
Finish: coated

| Code | Connection | | |
|---|---|---|---|
| **575**150 | DN 150 - PN 10 | 1 | - |
| **575**200 | DN 200 - PN 10 | 1 | - |
| **575**250 | DN 250 - PN 10 | 1 | - |

## Pre-assembled group with BA type backflow prevention device

## 570

Pre-assembled group, female connections.
Complete with:
- 574 series backflow preventer;
- 577 series strainer for backflow preventers;
- manual shut-off valves.

Medium temperature range: 5–65 °C
Nominal pressure: PN 10



| Code | Connection | | |
|---|---|---|---|
| **570**004 | 1/2″F | 1 | - |
| **570**005 | 3/4″F | 1 | - |
| **570**006 | 1″F | 1 | - |
| **570**007 | 1 1/4″F | 1 | - |
| **570**008 | 1 1/2″F | 1 | - |
| **570**009 | 2″F | 1 | - |

## 570

Pre-assembled group, flanged connections.
To be coupled with flat counterflanges EN 1092-1.
Complete with:
- 5751 series backflow preventer;
- 579 series strainer for backflow preventers;
- manual shut-off valves.

Medium temperature range: 5–65 °C
Nominal pressure: PN 10



| Code | Connection | | |
|---|---|---|---|
| **570**050 | DN 50 - PN 10 | 1 | - |
| **570**060 | DN 65 - PN 10 | 1 | - |
| **570**080 | DN 80 - PN 10 | 1 | - |
| **570**100 | DN 100 - PN 10 | 1 | - |

## 570

Pre-assembled group, flanged connections.
To be coupled with flat counterflanges EN 1092-1.
Complete with:
- 575 series backflow preventer;
- 579 series strainer for backflow preventers;
- manual shut-off valves.

Medium temperature range: 5–60 °C
Nominal pressure: PN 10



| Code | Connection | | |
|---|---|---|---|
| **570**150 | DN 150 - PN 10 | 1 | - |
| **570**200 | DN 200 - PN 10 | 1 | - |
| **570**250 | DN 250 - PN 10 | 1 | - |

# Spare parts for backflow prevention devices



Discharge device for backflow preventers 574 and 575 series.

| Code | Article use | | |
|---|---|---|---|
| 59978 | 574004 | 1 | - |
| 59471 | 574040, 574050, 574006 | 1 | - |
| 59457 | 574600, 574700, 574008 | 1 | - |
| 59461 | 574800, 574900, 575005 | 1 | - |



Discharge valve seat for backflow preventers 574 and 575 series.

| Code | Notes | Article use | | |
|---|---|---|---|---|
| 59472 | valve seat (3/4") | 574040, 574050, 574006 | 1 | - |
| 59458 | valve seat (1 1/4") | 574600, 574700, 574008 | 1 | - |
| 59462 | valve seat (2") | 574800, 574900, 575005, 575006 | 1 | - |



Upstream check valve for backflow preventers 574 and 575 series.

| Code | Article use | | |
|---|---|---|---|
| 59977 | 574004 | 1 | - |
| 59973 | 574040, 574050 | 1 | - |
| 59469 | 574006 | 1 | - |
| 59455 | 574600, 574700, 574008 | 1 | - |
| 59459 | 574800, 574900, 575005 | 1 | - |



Downstream check valve for backflow preventers 574 and 575 series.

| Code | Article use | | |
|---|---|---|---|
| 59979 | 574004 | 1 | - |
| 59470 | 574040, 574050, 574006 | 1 | - |
| 59456 | 574600, 574700, 574008 | 1 | - |
| F0001636 | 574008 | 1 | - |
| 59460 | 574800, 574900 | 1 | - |



Discharge device for backflow preventer 575 series.

| Code | Article use | | |
|---|---|---|---|
| 59625 | 575006 | 1 | - |
| 59629 | 575008, 575010 | 1 | - |



Discharge valve seat for backflow preventer 575 series.

| Code | Article use | | |
|---|---|---|---|
| 59630 | 575008, 575010 | 1 | - |



Upstream check valve for backflow preventer 575 series.

| Code | Article use | | |
|---|---|---|---|
| 59627 | 575006 | 1 | - |
| 59631 | 575008, 575010 | 1 | - |



Downstream check valve for backflow preventer 575 series.

| Code | Article use | | |
|---|---|---|---|
| 59628 | 575006 | 1 | - |
| 59632 | 575008, 575010 | 1 | - |

# BA type backflow prevention devices with cartridge



## 580

Backflow preventer with multifunction geometry. **BA type**. Threaded union connections.
Complete with inlet strainer.
For in-line, horizontal or vertical installation.
**Certified to EN 12729**.

Medium temperature range: 5–65 °C
Nominal pressure: PN 10
Material: dezincification resistant brass DR

| Code | Connection | Notes | DN | | |
|---|---|---|---|---|---|
| **580**004 | 1/2″ M | - | DN 15 | 1 | 5 |
| **580**040 | 1/2″ M | DN 20 cartridge | DN 15 | 1 | 5 |
| **580**050 | 3/4″ M | - | DN 20 | 1 | 5 |
| **580**060 | 1″ M | - | DN 25 | 1 | - |
| **580**070 | 1 1/4″ M | - | DN 32 | 1 | - |



## 580

Backflow preventer with multifunction geometry. **BA type**. Complete with connection fitting to the tap at the inlet and hose connection at the outlet.
Complete with strainer at the inlet.
For vertical installation.
**Certified to EN 12729 and Beschluss 4/2007**.

Medium temperature range: 5–65 °C
Nominal pressure: PN 10
Material: dezincification resistant brass DR

| Code | Inlet connection | Outlet connection | DN | | |
|---|---|---|---|---|---|
| **580**104 | 3/4″ F captive nut | 3/4″ M | DN 15 | 1 | 5 |
| **580**150 | 3/4″ F captive nut | 3/4″ M | DN 20 | 1 | 5 |



## 580

Backflow preventer with multifunction geometry. **BA type**. Complete with isolating valve at the inlet and hose connection at the outlet.
Complete with strainer at the inlet.
For vertical installation.
**Certified to EN 12729 and W570-3**.

Medium temperature range: 5–65 °C
Nominal pressure: PN 10
Material: dezincification resistant brass DR

| Code | Inlet connection | Outlet connection | Notes | DN | | |
|---|---|---|---|---|---|---|
| **580**240 | 1/2″ M | 3/4″ M | DN 20 cartridge | DN 15 | 1 | 5 |
| **580**250 | 3/4″ M | 3/4″ M | - | DN 20 | 1 | 5 |

# STRAINERS

## Threaded filters for domestic hot water/ heating systems



### 577

Y-strainer.
Filtering mesh in stainless steel AISI 304.

Medium temperature range: -20–110 °C
Maximum percentage of glycol: 30 %
Medium: water, glycol solutions
Material: bronze

| Code | Connection | Strainer mesh size ⌀ (mm) | Kv ($m^3/h$) | PN | | |
|---|---|---|---|---|---|---|
| **577**004 | 1/2″F | 0,40 | 2,5 | PN 16 | 1 | 50 |
| **577**005 | 3/4″F | 0,40 | 3,9 | PN 16 | 1 | - |
| **577**006 | 1″F | 0,40 | 7 | PN 16 | 1 | 25 |
| **577**007 | 1 1/4″F | 0,47 | 16 | PN 16 | 1 | 25 |
| **577**008 | 1 1/2″F | 0,47 | 24 | PN 16 | 1 | - |
| **577**009 | 2″F | 0,53 | 35 | PN 16 | 1 | - |
| **577**020 | 2 1/2″F | 0,53 | 57 | PN 10 | 1 | - |
| **577**030 | 3″F | 0,53 | 73 | PN 10 | 1 | - |

## Flanged filters for domestic hot water systems



### 579

Y-strainer.
To be coupled with flat counterflanges EN 1092-1.
For backflow preventer 575 series and for pressure reducing valve 576 series.
Stainless steel mesh.
With drain cock.
Note (*): rhomboidal reinforcing mesh.

Maximum working pressure: 16 bar
Medium temperature range: 0–60 °C
Material: cast iron
Finish: coated

| Code | Connection | Notes | Strainer mesh size ⌀ (mm) | Kv ($m^3/h$) | | |
|---|---|---|---|---|---|---|
| **579**050 | DN 50 - PN 16 | - | 1 | 28 | 1 | - |
| **579**060 | DN 65 - PN 16 | - | 1 | 37,2 | 1 | - |
| **579**080 | DN 80 - PN 16 | - | 1 | 62,2 | 1 | - |
| **579**100 | DN 100 - PN 16 | - | 1,6 | 149 | 1 | - |
| **579**120 | DN 125 - PN 16 | (*) | 1,6 | 320 | 1 | - |
| **579**150 | DN 150 - PN 16 | (*) | 1,6 | 367 | 1 | - |
| **579**200 | DN 200 - PN 16 | (*) | 1,6 | 652 | 1 | - |
| **579**250 | DN 250 - PN 16 | (*) | 2 | 844 | 1 | - |

## CHECK VALVES

# EA type check valves with built-in shut-off valve



## 324

Anti-pollution check valvewith built-in shut-off valve **EA type**.
Replaceable check valve cartridge.
Pressure test ports upstream and downstream.
**Certified to EN 13959 e EN 13828**.
PATENT PENDING

Maximum working pressure: 10 bar
Minimum check valve opening pressure: 0,5 kPa
Medium temperature range: 5–65 °C
Medium: domestic water
Material: dezincification resistant brass DR "low lead"

| Code | Connection | DN | | |
|---|---|---|---|---|
| **324**140 | 1/2" M | DN 20 (check valve) | 1 | 10 |
| **324**150 | 3/4" M | DN 20 (check valve) | 1 | 10 |



## 324

Anti-pollution check valvewith built-in shut-off valve **EA type**.
Replaceable check valve cartridge.
Pressure test ports upstream and downstream.
**Certified to EN 13959 e EN 13828**.
PATENT PENDING

Maximum working pressure: 10 bar
Minimum check valve opening pressure: 0,5 kPa
Medium temperature range: 5–65 °C
Medium: domestic water
Material: dezincification resistant brass DR "low lead"

| Code | Inlet connection | Outlet connection | DN | | |
|---|---|---|---|---|---|
| **324**250 | 3/4" M | 3/4" F captive nut | DN 20 (check valve) | 1 | 10 |



## 324

Anti-pollution check valvewith built-in shut-off valve **EA type**.
Replaceable check valve cartridge.
Pressure test ports upstream and downstream.
**Certified to EN 13959 e EN 13828**.
PATENT PENDING

Maximum working pressure: 10 bar
Minimum check valve opening pressure: 0,5 kPa
Medium temperature range: 5–65 °C
Medium: domestic water
Material: dezincification resistant brass DR "low lead"

| Code | Connection | DN | | |
|---|---|---|---|---|
| **324**110 | Ø 15 | DN 20 | 1 | 10 |
| **324**120 | Ø 22 | DN 20 | 1 | 10 |



Pressure gauge for 533H series inclined micro pressure reducing valves for special applications.

Pressure gauge scale: 0–10 bar

| Code | Connection | | |
|---|---|---|---|
| F0002665 | 1/4" M radial connection | 1 | - |

## Ball valves with built-in check valves



# 3230 BALLSTOP

Ball valve with built-in check valve, female connections.
Butterfly handle.

Maximum working pressure: 16 bar
Medium temperature range: 5–90 °C
Material: brass

| Code | Connection | | |
|---|---|---|---|
| **3230**40 | 1/2″ F | 10 | - |
| **3230**50 | 3/4″ F | 10 | - |
| **3230**62 | 1″ F | 4 | - |



# 3230 BALLSTOP

Ball valve with built-in check valve, female connections.
Lever handle.

Maximum working pressure: 16 bar
Medium temperature range: 5–90 °C
Material: brass

| Code | Connection | | |
|---|---|---|---|
| **3230**60 | 1″ F | 4 | - |
| **3230**70 | 1 1/4″ F | 4 | - |
| **3230**80 | 1 1/2″ F | 2 | - |
| **3230**90 | 2″ F | 1 | - |



# 332 BALLSTOP

Ball valve with built-in check valve, male - female connections.
Butterfly handle.

Maximum working pressure: 16 bar
Medium temperature range: 5–90 °C
Material: brass

| Code | Inlet connection | Outlet connection | | |
|---|---|---|---|---|
| **332**400 | 1/2″ M | 1/2″ F | 10 | - |



# 333 BALLSTOP

Ball valve with built-in check valve, female - captive nut connection.
Drilled anti-tamper safety nut, butterfly handle.

Maximum working pressure: 16 bar
Medium temperature range: 5–90 °C
Material: brass

| Code | Inlet connection | Outlet connection | | |
|---|---|---|---|---|
| **333**400 | 1/2″ F | 3/4″ F captive nut | 10 | - |
| **333**500 | 3/4″ F | 3/4″ F captive nut | 10 | - |



# 334 BALLSTOP

Ball valve with built-in check valve, male - captive nut connection.
Drilled anti-tamper safety nut, butterfly handle.

Maximum working pressure: 16 bar
Medium temperature range: 5–90 °C
Material: brass

| Code | Inlet connection | Outlet connection | | |
|---|---|---|---|---|
| **334**400 | 1/2″ M | 3/4″ F captive nut | 10 | - |
| **334**500 | 3/4″ M | 3/4″ F captive nut | 10 | - |

## Single and double check valve



### 3037 ROBOCHECK-1

15 mm single check valve with compression ends.

Maximum working pressure: 10 bar
Medium temperature range: 2–90 °C
Material: dezincification resistant brass DR
Finish: chrome plated

| Code | Connection | | |
|---|---|---|---|
| **3037**15 | Ø 15 | 10 | 100 |



### 3038 ROBOCHECK-2

15 mm controllable double check valve with compression ends.

Maximum working pressure: 10 bar
Medium temperature range: 2–90 °C
Material: dezincification resistant brass DR
Finish: chrome plated

| Code | Connection | | |
|---|---|---|---|
| **3038**15 | Ø 15 | 5 | 100 |

## EA type check valves



### 3045

Check valve, female connections.
**EA type**.
Controllable.
**Certified to EN 13959**.

Maximum working pressure: 10 bar
Medium temperature range: 5–65 °C
Material: brass

| Code | Connection | | |
|---|---|---|---|
| **304540** | 1/2" F | 10 | 100 |
| **304550** | 3/4" F | 10 | 50 |
| **304560** | 1" F | 5 | 25 |
| **304570** | 1 1/4" F | 5 | 25 |
| **304580** | 1 1/2" F | 2 | 20 |
| **304590** | 2" F | 1 | 10 |



### 3046

Compact check valve, captive nut - male connections.
**EA type**.
Controllable.
**Certified to EN 13959**.

Maximum working pressure: 10 bar
Medium temperature range: 5–65 °C
Material: brass

| Code | Inlet connection | Outlet connection | DN | | |
|---|---|---|---|---|---|
| **304601** | 3/4" F captive nut | 3/4" M | DN 15 (check valve) | 10 | 100 |



## 3046

Check valve, captive nut - male connections.
**EA type**.
Controllable.
Note (*): not NF and SVGW certified
**Certified to EN 13959**.

Maximum working pressure: 10 bar
Medium temperature range: 5–65 °C
Material: brass

| Code | Inlet connection | Outlet connection | Notes | DN | | |
|---|---|---|---|---|---|---|
| **3046**40 | 3/4" F captive nut | 3/4" M | - | DN 15 (check valve) | 10 | 100 |
| **3046**50 | 1" F captive nut | 1" M | - | DN 20 (check valve) | 10 | 50 |
| **3046**60 | 1 1/4" F captive nut | 1 1/4" M | (*) | DN 25 (check valve) | 4 | 20 |
| **3046**70 | 1 1/2" F captive nut | 1 1/2" M | (*) | DN 32 (check valve) | 4 | 20 |
| **3046**80 | 2" F captive nut | 2" M | (*) | DN 40 (check valve) | 2 | 10 |



## 3046

Check valve, captive nut - male angled connections.
**EA type**.
Controllable.
**Certified to EN 13959**.

Maximum working pressure: 10 bar
Medium temperature range: 5–65 °C
Material: brass

| Code | Inlet connection | Outlet connection | DN | | |
|---|---|---|---|---|---|
| **3046**44 | 3/4" F captive nut | 3/4" M | DN 15 (check valve) | 10 | 50 |
| **3046**54 | 1" F captive nut | 1" M | DN 20 (check valve) | 10 | 60 |



## 3046

Check valve, captive nut - male connections.
**EA type**.
Controllable.
**Certified to EN 13959**.

Maximum working pressure: 10 bar
Medium temperature range: 5–65 °C
Material: brass

| Code | Inlet connection | Outlet connection | DN | | |
|---|---|---|---|---|---|
| **3046**45 | 3/4" F captive nut | 3/4" M | DN 15 (check valve) | 10 | 100 |



## 3041

Ball valve with built-in certified check valve, captive nut - male connections.
Controllable.

Maximum working pressure: 10 bar
Medium temperature range: 5–65 °C
Material: brass

| Code | Inlet connection | Outlet connection | DN | | |
|---|---|---|---|---|---|
| **3041**40 | 3/4" F captive nut | 3/4" M | DN 15 (check valve) | 5 | 25 |

## EB type check valves



## 3047

Check valve, female connections.
**EB type**.
Not controllable.

Maximum working pressure: 10 bar
Medium temperature range: 5–65 °C
Material: brass

| Code | Connection | | |
|---|---|---|---|
| **3047**40 | 1/2" F | 10 | 100 |
| **3047**50 | 3/4" F | 10 | 50 |
| **3047**60 | 1" F | 5 | 25 |

## Double check valve



## 3048

Double check valve, female connections.
Controllable.

Maximum working pressure: 10 bar
Medium temperature range: 5–65 °C
Material: brass

| Code | Connection | | |
|---|---|---|---|
| **3048**40 | 1/2" F | 1 | 50 |
| **3048**50 | 3/4" F | 1 | 50 |

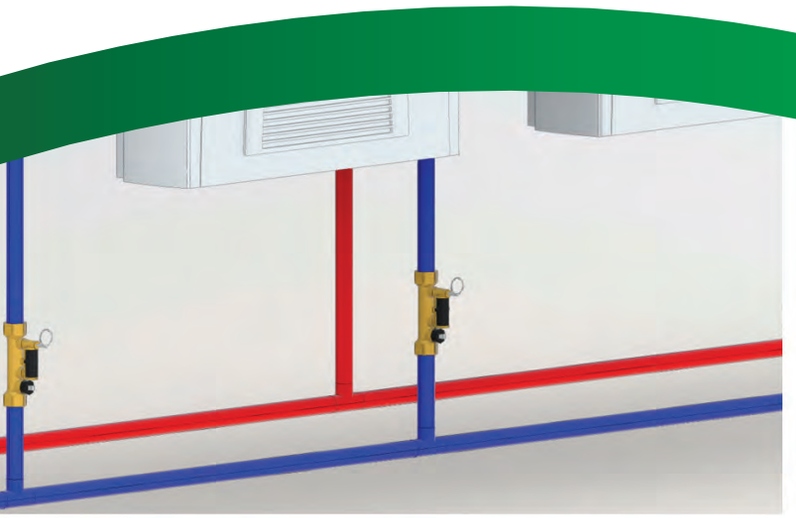

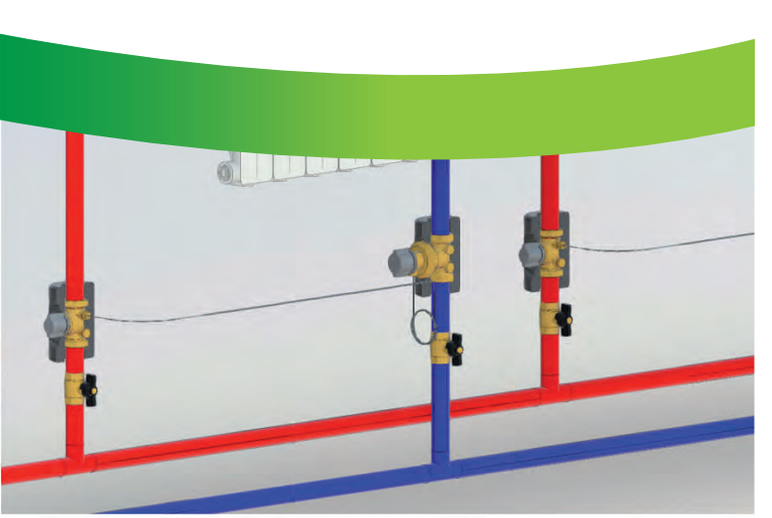

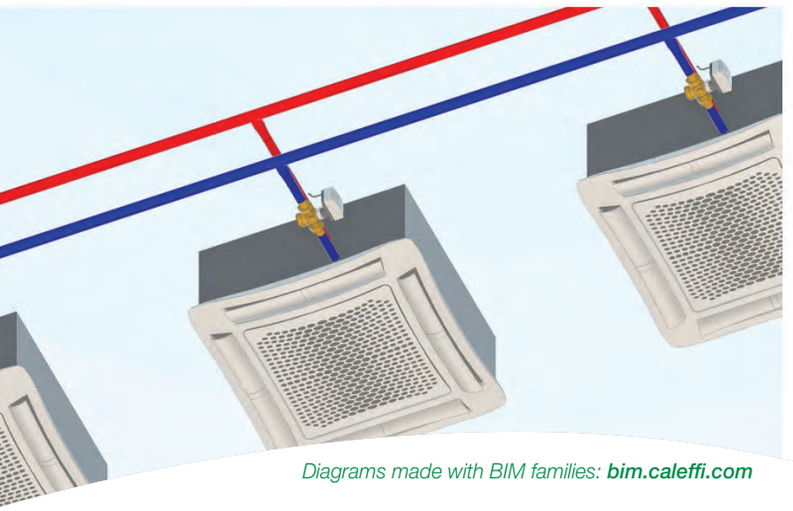

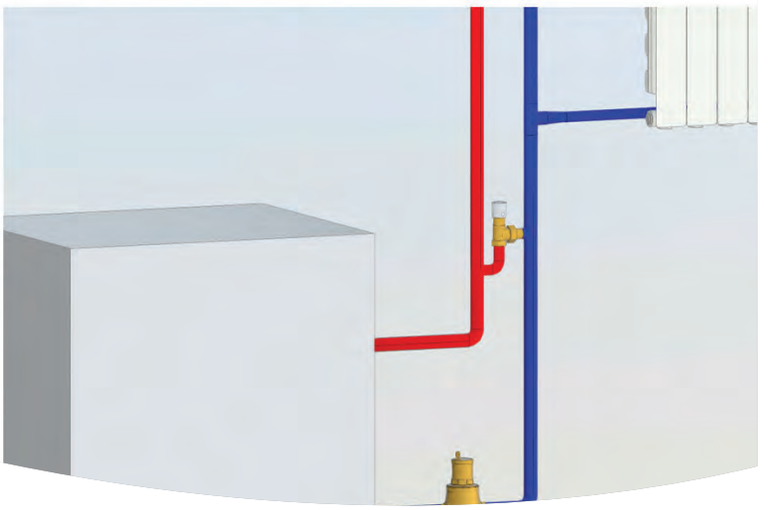

*Diagrams made with BIM families:* ***bim.caleffi.com***



**Static balancing devices**
**Dynamic balancing and control devices**
**Automatic flow rate regulator (AUTOFLOW®)**
**Differential pressure control devices**
**Regulating globe valves**
**Butterfly valves**
**Regulating mixing valves**

# BALANCING AND CONTROL DEVICES

Circuit balancing devices can be classified in accordance with their method of action and the type of control they perform in relation to the hydronic circuit.

## Static balancing devices

| | |
|---|---|
| - Manual balancing valve, with Venturi device | 130 series |
| - Manual balancing valve, with variable orifice | 130 series |
| - Balancing valve with flow meter | 132 series |

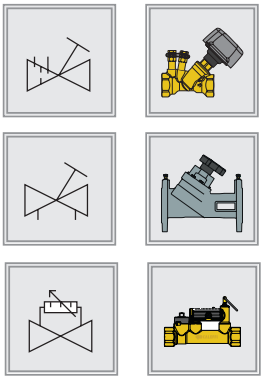

## Dynamic balancing and control devices

| | |
|---|---|
| - Connection and regulation kit for HVAC terminal units | 149 series |
| - Pressure independent control valve (PICV) | 145-146 series |
| - Automatic flow rate regulator, fixed flow rate | 127-128-121-126-<br>120-125-103 series |

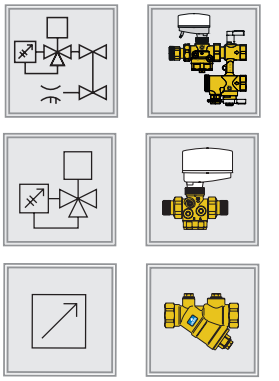

## Differential pressure control devices

| | |
|---|---|
| - Differential pressure control valve | 140 series |
| - Shut-off and pre-regulation valve | 142 series |
| - Differential by-pass valve | 519 series |

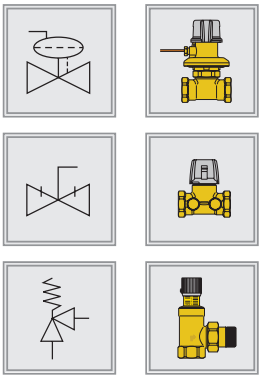

## Regulating valves

| | |
|---|---|
| - Regulating valves | 636 series |
| - Temperature regulating valves | 610-611-612 series |

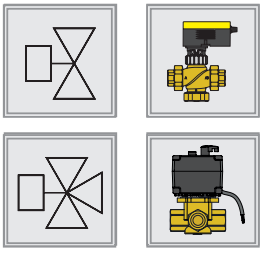

# STATIC BALANCING DEVICES

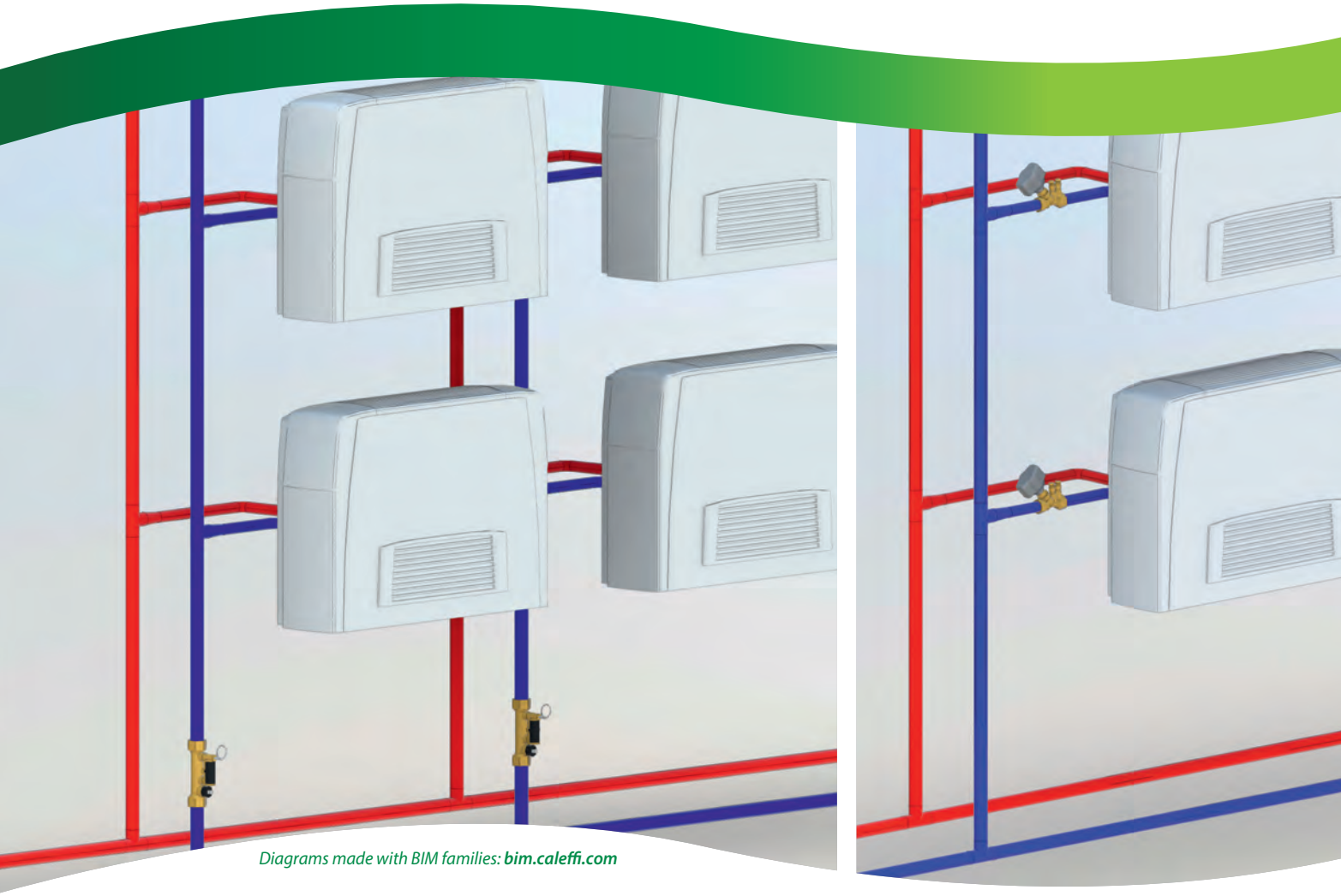

*Diagrams made with BIM families:* ***bim.caleffi.com***

**Balancing valves**
**Measurement and control**
**Balancing valves with flow meter**

# STATIC BALANCING DEVICES

## Balancing valves



### 130

Balancing valve for hydraulic systems.
Flow meter with Venturi device.
Stainless steel obturator.
Complete with quick-fit pressure test ports.

Maximum working pressure: 16 bar
Medium temperature range: -20–120 °C
Maximum percentage of glycol: 50 %
Medium: water, glycol solutions
Material: dezincification resistant brass DR

WRAS APPROVED PRODUCT CERTIFICATION MARK

| Code | Connection | | |
|---|---|---|---|
| **130**400 | 1/2″F | 1 | 5 |
| **130**500 | 3/4″F | 1 | 5 |
| **130**600 | 1″F | 1 | 5 |
| **130**700 | 1 1/4″F | 1 | 5 |
| **130**800 | 1 1/2″F | 1 | 5 |
| **130**900 | 2″F | 1 | 5 |



### 130

Pre-formed insulation for balancing valves with threaded connections 130 series.
For heating and air-conditioning.

| Code | Notes | | |
|---|---|---|---|
| CBN130400 | 1/2″ | 1 | - |
| CBN130500 | 3/4″ | 1 | - |
| CBN130600 | 1″ | 1 | - |
| CBN130700 | 1 1/4″ | 1 | - |
| CBN130800 | 1 1/2″ | 1 | - |
| CBN130900 | 2″ | 1 | - |



### 142

Balancing valve.

Maximum working pressure: 16 bar
Medium temperature range: -10–120 °C
Maximum percentage of glycol: 50 %
Medium: glycol solutions
Material: dezincification resistant brass DR

| Code | Connection | | |
|---|---|---|---|
| **142**340 | 1/2″F | 10 | - |
| **142**345 | 1/2″F | 10 | - |
| **142**350 | 3/4″F | 10 | - |



### 130

Balancing valve for hydraulic systems.
Complete with quick-fit pressure test ports.
To be coupled with flat counterflanges EN 1092-1.

Maximum working pressure: 16 bar
Medium temperature range: -10–120 °C
Maximum percentage of glycol: 50 %
Medium: glycol solutions, water
Material: cast iron

| Code | Connection | | |
|---|---|---|---|
| **130**063 | DN 65 - PN 16 | 1 | - |
| **130**083 | DN 80 - PN 16 | 1 | - |
| **130**103 | DN 100 - PN 16 | 1 | - |
| **130**123 | DN 125 - PN 16 | 1 | - |
| **130**153 | DN 150 - PN 16 | 1 | - |
| **130**203 | DN 200 - PN 16 | 1 | - |
| **130**253 | DN 250 - PN 16 | 1 | - |
| **130**303 | DN 300 - PN 16 | 1 | - |

## Measurement and control

### 130

Electronic flow rate and differential pressure measuring station.
Supplied with shut-off valves and connection fittings.
Bluetooth® transmission between △p meter and remote control unit.
It can also be used to measure the flow rate of series 130 and 142 balancing valves, and the 149 unit.
Can be used for measuring △p on automatic flow rate regulators.
Versions complete with remote control unit with Android® application for Smartphone and Tablet.

Measurement range: 0–1000 kPa
Maximum working pressure (static): 1000 kPa
Electric supply: with battery



CE

| Code | Notes | | |
|---|---|---|---|
| **130**006 | complete with remote control unit, with Android® application | 1 | - |
| **130**005 | without remote control unit, with Android® application | 1 | - |

**Smart Balancing Caleffi**
**Available app for smartphone.**
**Download for your Android® mobile phone.**

## Balancing valves with flow meter



### 132

Balancing valve with flow meter and direct reading of flow rate.
Ball valve for flow rate adjustment.
Graduated scale flow meter with magnetic movement flow rate indicator.
With insulation.
PATENT

Maximum working pressure: 10 bar
Medium temperature range: -10–110 °C
Medium: water, glycol solutions
Maximum percentage of glycol: 50 %
Material: brass

| Code | Connection | Flow rate regulation (l/min) | | |
|---|---|---|---|---|
| **132**402 | 1/2" F | 2–7 | 1 | 5 |
| **132**512 | 3/4" F | 5–13 | 1 | 5 |
| **132**522 | 3/4" F | 7–28 | 1 | 5 |
| **132**602 | 1" F | 10–40 | 1 | 5 |
| **132**702 | 1 1/4" F | 20–70 | 1 | 5 |
| **132**802 | 1 1/2" F | 30–120 | 1 | 5 |
| **132**902 | 2" F | 50–200 | 1 | 5 |



### 132

Balancing valve with flow meter and direct reading of flow rate.
Graduated scale flow meter with magnetic movement flow rate indicator.
Brass flow meter.
To be coupled with flat counterflanges EN 1092-1.

PATENT

Maximum working pressure: 10 bar
Medium temperature range: -10–110 °C
Maximum percentage of glycol: 50 %
Medium: water, glycol solutions
Material: cast iron

| Code | Connection | Flow rate regulation ($m^3/h$) | | |
|---|---|---|---|---|
| **132**060 | DN 65 - PN 16 | 6–24 | 1 | - |
| **132**080 | DN 80 - PN 16 | 8–32 | 1 | - |
| **132**100 | DN 100 - PN 16 | 12–48 | 1 | - |

**Flow rate adjustment**

The flow rate is adjusted by carrying out the following operations:

**1**. With the aid of the indicator (1), mark the reference flow rate at which the valve has to be set.

**2**. Use the ring (2) to open the obturator that shuts off the flow of medium in the flow meter (3) under normal operating conditions.

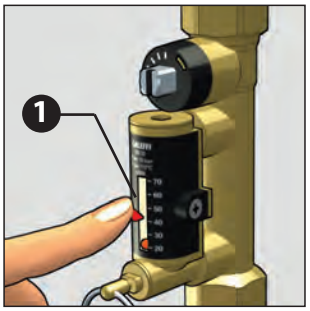


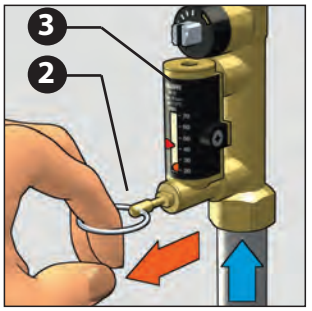


**3**. Keeping the obturator open, apply a wrench on the control stem of the valve (4) to adjust the flow rate. It is indicated by a metal ball (5) that runs inside a transparent guide (6) marked by a graduated scale in l/min.

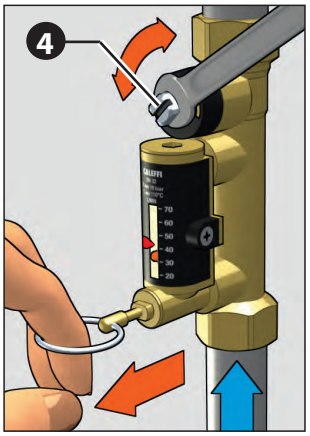


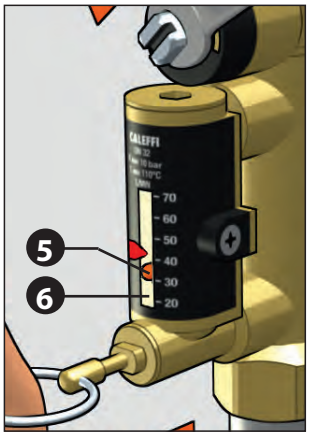


**4**. After completing the balancing, release the ring (2) of the flow meter obturator that, thanks to an internal spring, will automatically go back into the closed position.

**5**. After completing the balancing, the indicator (1) can be used to keep in memory the selected setting in case of future inspections.

**Complete opening and closing of the valve**

Complete opening of the valve

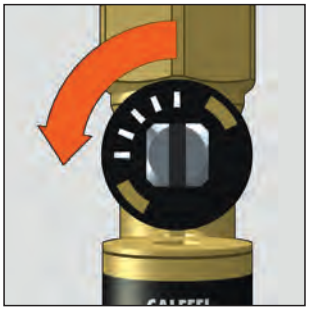

Complete closing of the valve

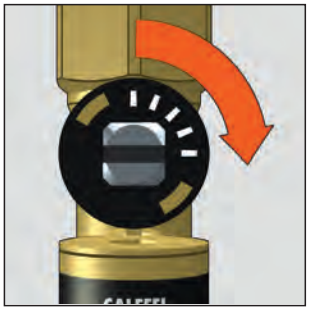

# DYNAMIC BALANCING AND CONTROL DEVICES

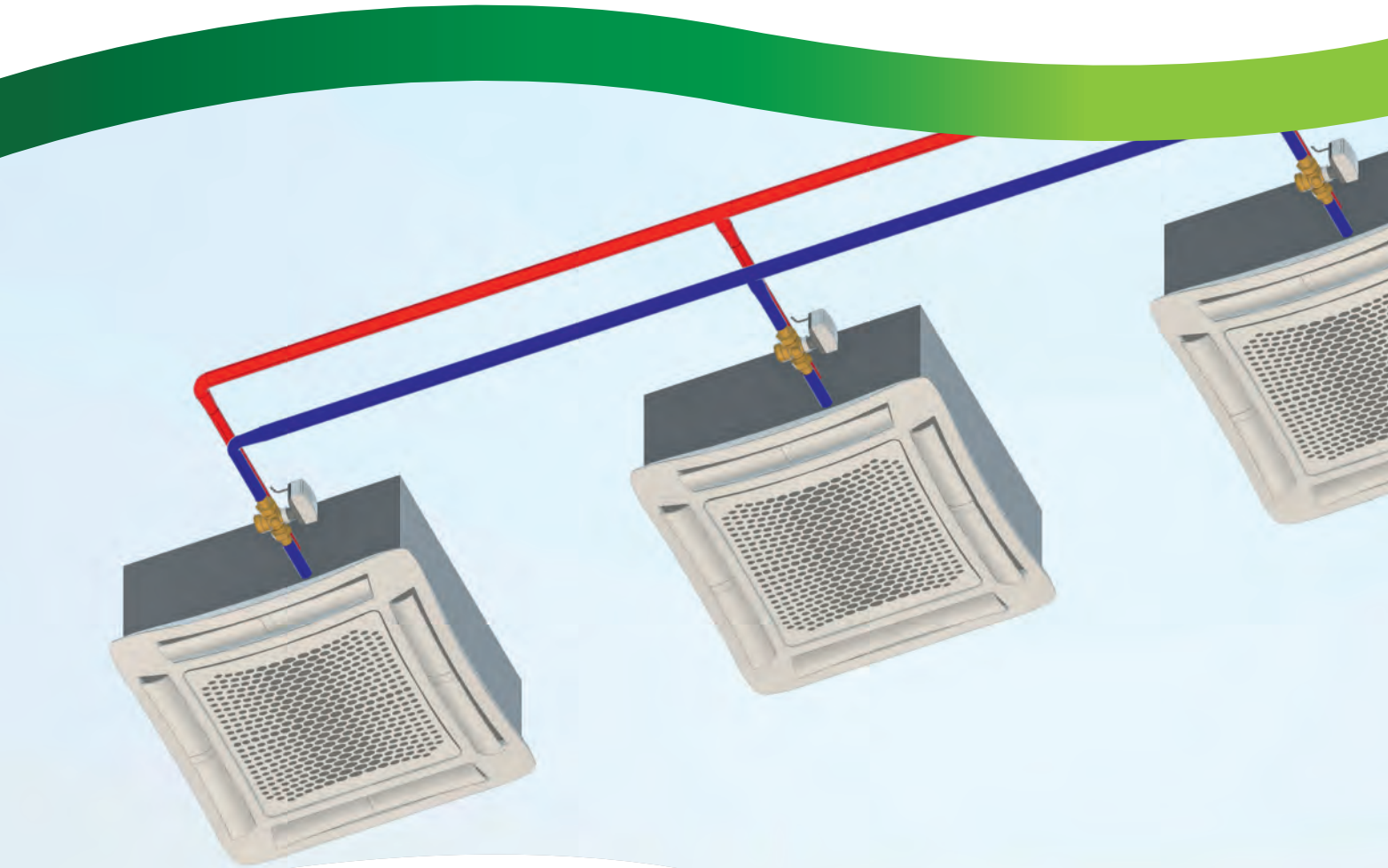

*Diagrams made with BIM families:* ***bim.caleffi.com***

**Pressure independent control valves (PICV)**
**Cast iron pressure independent control valves (PICV)**
**Connection and regulation kit**
**Compact automatic flow rate regulator, in line**
**Compact automatic flow rate regulator**
**Automatic flow rate regulator**
**Automatic flow rate regulator and ball valve**
**Spare technopolymer cartridges, for 127 series**
**Spare technopolymer cartridges, for 128 series**
**Spare technopolymer cartridges, for 121 and 126 series**
**Automatic flow rate regulator with stainless steel cartridge and ball valve**
**Automatic flow rate regulator with stainless steel cartridge**
**Spare stainless steel cartridges**
**Spare stainless steel cartridges**
**Automatic flow regulator with stainless steel cartridge, flanged**

## Pressure independent control valves (PICV)



### 145 FLOWMATIC®

Pressure independent control valve.
Fitted for 145 series actuator and 6565/6566 series thermo-electric actuator.
Flow rate regulator in polymer with membrane in EPDM.
Graduated scale indicator.
**With pressure test ports**.

Maximum working pressure: 16 bar
Medium temperature range: -20–120 °C
Maximum percentage of glycol: 50 %
Medium: water, glycol solutions
Range △p: 25–400 kPa
Material: dezincification resistant brass DR

| Code | Connection | DN | Flow rate regulation ($m^3/h$) | | |
|---|---|---|---|---|---|
| **145**437 H20 | 1/2″ M | DN 15 | 0,02–0,20 | 1 | 10 |
| **145**447 H40 | 3/4″ M | DN 15 | 0,08–0,40 | 1 | 10 |
| **145**447 H80 | 3/4″ M | DN 15 | 0,08–0,80 | 1 | 10 |
| **145**557 H40 | 1″ M | DN 20 | 0,08–0,40 | 1 | 10 |
| **145**557 H80 | 1″ M | DN 20 | 0,08–0,80 | 1 | 10 |
| **145**557 1H2 | 1″ M | DN 20 | 0,12–1,20 | 1 | 10 |
| **145**667 1H8 | 1 1/4″ M | DN 25 | 0,18–1,80 | 1 | 10 |
| **145**667 3H0 | 1 1/4″ M | DN 25 | 0,30–3,00 | 1 | 10 |
| **145**667 3H7 | 1 1/4″ M | DN 25 | 0,37–3,70 | 1 | 10 |



### 145 FLOWMATIC®

Pressure independent control valve.
Fitted for 145 series actuator and 6565/6566 series thermo-electric actuator.
Flow rate regulator in polymer with membrane in EPDM. Graduated scale indicator.
Fitted for connection of pressure test ports.

Maximum working pressure: 16 bar
Medium temperature range: -20–120 °C
Maximum percentage of glycol: 50 %
Medium: water, glycol solutions
Range △p: 25–400 kPa
Material: dezincification resistant brass DR

| Code | Connection | DN | Flow rate regulation ($m^3/h$) | | |
|---|---|---|---|---|---|
| **145**434 H20 | 1/2″ M | DN 15 | 0,02–0,20 | 1 | 10 |
| **145**444 H20 | 3/4″ M | DN 15 | 0,02–0,20 | 1 | 10 |
| **145**444 H40 | 3/4″ M | DN 15 | 0,08–0,40 | 1 | 10 |
| **145**444 H80 | 3/4″ M | DN 15 | 0,08–0,80 | 1 | 10 |
| **145**554 H20 | 1″ M | DN 20 | 0,02–0,20 | 1 | 10 |
| **145**554 H40 | 1″ M | DN 20 | 0,08–0,40 | 1 | 10 |
| **145**554 H80 | 1″ M | DN 20 | 0,08–0,80 | 1 | 10 |
| **145**554 1H2 | 1″ M | DN 20 | 0,12–1,20 | 1 | 10 |
| **145**664 1H8 | 1 1/4″ M | DN 25 | 0,18–1,80 | 1 | 10 |
| **145**664 3H0 | 1 1/4″ M | DN 25 | 0,30–3,00 | 1 | 10 |
| **145**664 3H7 | 1 1/4″ M | DN 25 | 0,37–3,70 | 1 | 10 |



### 145

Union with gasket.

| Code | Inlet connection | Outlet connection | | |
|---|---|---|---|---|
| **145**001 | 1/2″ F | 3/8″ M | 1 | - |
| **145**003 | 3/4″ F | 1/2″ M | 1 | - |
| **145**005 | 1″ F | 3/4″ M | 1 | - |
| **145**006 | 1″ F | 1″ M | 1 | - |
| **145**007 | 1 1/4″ F | 1″ M | 1 | - |
| **145**008 | 1 1/4″ F | 1 1/4″ M | 1 | - |



### 145

Insulation for FLOWMATIC® 145 series.
Used for DN 15 - DN 20.

| Code | Notes | | |
|---|---|---|---|
| CBN145437 | for DN 15 - DN 20 | 1 | - |



### 145

Insulation for FLOWMATIC® 145 series.
Used for DN 25.

| Code | Notes | | |
|---|---|---|---|
| CBN145667 | for DN 25 | 1 | - |

**Operating principle**

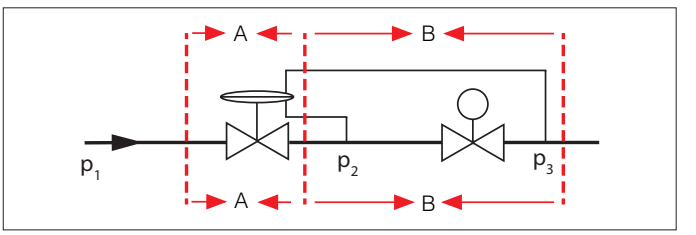


Where:
$p_1$ = upstream pressure
$p_2$ = intermediate pressure
$p_3$ = downstream pressure
($p_1$ - $p_3$) = total valve **Δp**



## 145

Proportional linear actuator for FLOWMATIC 145 series control valve and 149 series kit.

Ambient temperature range: 0–50 °C
Protection class: IP 54
Control signal: 0–10 V, 0 (2)–10 V
Feedback signal: 0–10 V
Supply cable length: 2 m

CE

| Code | Electric supply | | |
|---|---|---|---|
| **145**013 | 24 V AC/DC | 1 | 100 |



## 145

Proportional linear actuator for FLOWMATIC® 145 series control valve and 149 series kit.

Ambient temperature range: 0–50 °C
Protection class: IP 54
Control signal: 0 (2)–10 V, 2 point, 3 point
Feedback signal: 0–10 V
Supply cable length: 1,5 m

CE

| Code | Electric supply | | |
|---|---|---|---|
| **145**019 | 24 V AC/DC | 1 | 40 |



## 145

Proportional linear actuator for FLOWMATIC® 145 series control valve and 149 series kit, with **fail-safe function**.

Ambient temperature range: 0–50 °C
Protection class: IP 54
Control signal: 0 (2)–10 V, 2 point
Feedback signal: 0–10 V
Supply cable length: 1,5 m

CE

| Code | Electric supply | | |
|---|---|---|---|
| **145**018 | 24 V AC/DC | 1 | 40 |



## 6565

Proportional thermo-electric actuator for FLOWMATIC 145 series control valve and 149 series kit.
Normally closed.
Quick-coupling installation, with a clip adapter.

Ambient temperature range: 0–60 °C
Running power consumption: 1,2 W
Protection class: IP 54
Control signal: 0–10 V
Feedback signal: 0–10 V
Supply cable length: 1 m

CE

| Code | Electric supply | | |
|---|---|---|---|
| **6565**24 | 24 V AC/DC | 1 | 100 |



## 6565

Thermo-electric actuator for FLOWMATIC 145 series control valve and 149 series kit.
Quick-coupling installation with fixing clip adaptor.
**Normally closed**.

Ambient temperature range: 0–60 °C
Running power consumption: 1 W
Protection class: IP 54
Supply cable length: 1 m
Control signal: ON/OFF

CE

| Code | Electric supply | | |
|---|---|---|---|
| **6565**02 | 230 V AC | 1 | 100 |
| **6565**04 | 24 V AC/DC | 1 | 100 |



## 6566

Thermo-electric actuator.
For FLOWMATIC 145 series control valve,149 series kit, user modules 7002 and 7004 series.
Quick-coupling installation with fixing clip adaptor.
**Normally open**.

Ambient temperature range: 0–60 °C
Running power consumption: 1 W
Protection class: IP 54
Supply cable length: 1 m
Control signal: ON/OFF

CE

| Code | Electric supply | | |
|---|---|---|---|
| **6566**02 | 230 V AC | 1 | 100 |
| **6566**04 | 24 V AC/DC | 1 | 100 |

# Cast iron pressure independent control valves (PICV)



## 145

Pressure independent control valve.
Complete with pressure test ports.

Maximum working pressure: 25 bar
Medium temperature range: -10–120 °C
Maximum percentage of glycol: 50 %
Medium: water, glycol solutions
Range △p: 30–600 kPa
Material: cast iron

| Code | Connection | DN | Flow rate working range ($m^3/h$) | | |
|---|---|---|---|---|---|
| **145**895 | 2″ M | DN 40 | 2,9–9,3 | 1 | - |
| **145**905 | 2 1/2″ M | DN 50 | 5,1–14,8 | 1 | - |

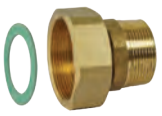

## 145

Flat seat union with gasket for cast iron 145 series.

| Code | Connection 1 | Connection 2 | | |
|---|---|---|---|---|
| **145**009 | 2″ F | 1 1/2″ M | 1 | - |
| **145**010 | 2 1/2″ F | 2″ M | 1 | - |



## 146

Manual actuator for 145895 and 145905 valves.

| Code | | |
|---|---|---|
| **146**001 | 1 | - |



## 145

Rotational proportional actuator for pressure independent control valve 145 series.
Manual override.

Ambient temperature range: -30–50 °C
Protection class: IP 54
Control signal: 2–10 V
Feedback signal: 2–10 V

CE

| Code | Article use | Electric supply | | |
|---|---|---|---|---|
| **145**017 | 145895, 145905 | 24 V AC/DC | 1 | - |



## 146

Pressure independent control valve.
To be coupled with flat counterflanges EN 1092-1.
Complete with pressure test ports.

Maximum working pressure: 16 bar
Medium temperature range: -10–120 °C
Maximum percentage of glycol: 50 %
Medium: glycol solutions
Range △p: 30–400 kPa
Material: cast iron

| Code | Connection | Flow rate working range ($m^3/h$) | | |
|---|---|---|---|---|
| **146**060 | DN 65 - PN 16 | 6–26 | 1 | - |
| **146**080 | DN 80 - PN 16 | 8–36 | 1 | - |
| **146**100 | DN 100 - PN 16 | 16–82,5 | 1 | - |
| **146**120 | DN 125 - PN 16 | 20–125 | 1 | - |
| **146**150 | DN 150 - PN 16 | 27–160 | 1 | - |



## 146

Rotational proportional actuator for pressure independent control valve 146 series.
Manual override.

Ambient temperature range: -30–50 °C
Protection class: IP 54
Control signal: 2–10 V
Feedback signal: 2–10 V

CE

| Code | Article use | Electric supply | | |
|---|---|---|---|---|
| **146**025 | 146060, 146080, 146100, 146120, 146150 | 24 V AC/DC | 1 | - |



## 146

Manual actuator for 146 series regulating valve.

| Code | | |
|---|---|---|
| **146**000 | 1 | - |

## Connection and regulation kit



### 149

Connection and regulation kit for HVAC terminal units.
**With Venturi device**.
Complete with:
- pressure independent control valve;
- three-way shut-off valves;
- built-in by-pass;
- Venturi device;
- filter cartridge;
- pre-formed shell insulation;
- drain cock.

With insulation.
PATENT PENDING

Maximum working pressure: 25 bar
Medium temperature range: -10–120 °C
Outlet centre distance: 80 mm
Maximum percentage of glycol: 50 %
Medium: water, glycol solutions
Range △p: 25–400 kPa
Material: dezincification resistant brass DR

| Code | DN | Kv Venturi ($m^3/h$) | Flow rate working range ($m^3/h$) | | |
|---|---|---|---|---|---|
| **149**400 H10 | DN 15 | 0,25 | 0,02–0,10 | 1 | - |
| **149**400 H20 | DN 15 | 0,50 | 0,10–0,20 | 1 | - |
| **149**400 H40 | DN 15 | 1,10 | 0,20–0,40 | 1 | - |
| **149**400 H80 | DN 15 | 2,35 | 0,40–0,80 | 1 | - |
| **149**500 H10 | DN 20 | 0,25 | 0,02–0,10 | 1 | - |
| **149**500 H20 | DN 20 | 0,50 | 0,10–0,20 | 1 | - |
| **149**500 H40 | DN 20 | 1,10 | 0,20–0,40 | 1 | - |
| **149**500 H80 | DN 20 | 2,35 | 0,40–0,80 | 1 | - |
| **149**500 1H2 | DN 20 | 5,00 | 0,80–1,20 | 1 | - |
| **149**600 1H8 | DN 25 | 5,00 | 1,20–1,80 | 1 | - |
| **149**600 3H0 | DN 25 | 9,60 | 1,80–3,00 | 1 | - |
| **149**600 3H7 | DN 25 | 9,60 | 1,85–3,70 | 1 | - |

**Characteristics components**

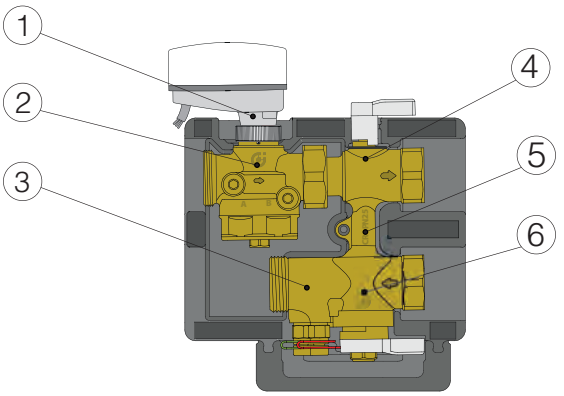


1. Actuator (optional)
2. Pressure independent control valve (PICV)
3. Venturi device for flow rate measurement with connections for pressure test ports (in 149.00 codes only)
4. Three-way shut-off valve
5. By-pass
6. Three-way shut-off valve with built-in strainer



### 149

Connection and regulation kit for HVAC terminal units.
Complete with:
- pressure independent control valve;
- three-way shut-off valves;
- built-in by-pass;
- filter cartridge;
- pre-formed shell insulation;
- drain cock.

With insulation.
PATENT PENDING

Maximum working pressure: 25 bar
Medium temperature range: -10–120 °C
Outlet centre distance: 80 mm
Maximum percentage of glycol: 50 %
Medium: water, glycol solutions
Range △p: 25–400 kPa
Material: dezincification resistant brass DR

| Code | DN | Flow rate working range ($m^3/h$) | | |
|---|---|---|---|---|
| **149**410 H20 | DN 15 | 0,02–0,20 | 1 | - |
| **149**410 H40 | DN 15 | 0,08–0,40 | 1 | - |
| **149**410 H80 | DN 15 | 0,08–0,80 | 1 | - |
| **149**510 H20 | DN 20 | 0,02–0,20 | 1 | - |
| **149**510 H40 | DN 20 | 0,08–0,40 | 1 | - |
| **149**510 H80 | DN 20 | 0,08–0,80 | 1 | - |
| **149**510 1H2 | DN 20 | 0,12–1,20 | 1 | - |
| **149**610 1H8 | DN 25 | 0,18–1,80 | 1 | - |
| **149**610 3H0 | DN 25 | 0,30–3,00 | 1 | - |
| **149**610 3H7 | DN 25 | 0,37–3,70 | 1 | - |



Optional drain cock for 149 series.

| Code | Pipe connection | Connection | DN | | |
|---|---|---|---|---|---|
| F0000680 | 3/4" M | 3/4" F | DN 15 | 1 | - |
| F0000681 | 1" M | 1" F | DN 20 | 1 | - |
| F0000682 | 1 1/4" M | 1 1/4" F | DN 25 | 1 | - |

**Can be combined with actuators code 145018, 145019 and 6565 series thermo-electric actuators.**



## 145

Proportional linear actuator for FLOWMATIC 145 series control valve and 149 series kit.

Ambient temperature range: 0–50 °C
Protection class: IP 54
Control signal: 0–10 V, 0 (2)–10 V
Feedback signal: 0–10 V
Supply cable length: 2 m

CE

| Code | Electric supply | |
|---|---|---|
| **145**013 | 24 V AC/DC | - |



## 145

Proportional linear actuator for FLOWMATIC® 145 series control valve and 149 series kit.

Ambient temperature range: 0–50 °C
Protection class: IP 54
Control signal: 0 (2)–10 V, 2 point, 3 point
Feedback signal: 0–10 V
Supply cable length: 1,5 m

CE

| Code | Electric supply | | |
|---|---|---|---|
| **145**019 | 24 V AC/DC | 1 | 40 |



## 145

Proportional linear actuator for FLOWMATIC® 145 series control valve and 149 series kit, with **fail-safe function**.

Ambient temperature range: 0–50 °C
Protection class: IP 54
Control signal: 0 (2)–10 V, 2 point
Feedback signal: 0–10 V
Supply cable length: 1,5 m

CE

| Code | Electric supply | | |
|---|---|---|---|
| **145**018 | 24 V AC/DC | 1 | 40 |



## 6565

Proportional thermo-electric actuator for FLOWMATIC 145 series control valve and 149 series kit.
Normally closed.
Quick-coupling installation, with a clip adapter.

Ambient temperature range: 0–60 °C
Running power consumption: 1,2 W
Protection class: IP 54
Control signal: 0–10 V
Feedback signal: 0–10 V
Supply cable length: 1 m

CE

| Code | Electric supply | | |
|---|---|---|---|
| **6565**24 | 24 V AC/DC | 1 | 100 |



## 6565

Thermo-electric actuator for FLOWMATIC 145 series control valve and 149 series kit.
Quick-coupling installation with fixing clip adaptor.
Normally closed.

Ambient temperature range: 0–60 °C
Running power consumption: 1 W
Protection class: IP 54
Supply cable length: 1 m
Control signal: ON/OFF

CE

| Code | Electric supply | | |
|---|---|---|---|
| **6565**02 | 230 V AC | 1 | 100 |
| **6565**04 | 24 V AC/DC | 1 | 100 |



## 6566

Thermo-electric actuator.
For FLOWMATIC 145 series control valve,149 series kit, user modules 7002 and 7004 series.
Quick-coupling installation with fixing clip adaptor.
Normally open.

Ambient temperature range: 0–60 °C
Running power consumption: 1 W
Protection class: IP 54
Supply cable length: 1 m
Control signal: ON/OFF

CE

| Code | Electric supply | | |
|---|---|---|---|
| **6566**02 | 230 V AC | 1 | 100 |
| **6566**04 | 24 V AC/DC | 1 | 100 |

# 149

Connection and regulation kit for HVAC terminal units.
Complete with:
- pressure independent control valve;
- three-way shut-off valves;
- built-in by-pass;
- Venturi device with pressure test ports;
- filter cartridge;
- pre-formed shell insulation;
- drain cock.

Can be combined with actuators code 145013 and 6565 series thermo-electric actuators.
With Venturi device.

Maximum working pressure: 25 bar
Medium temperature range: -10–120 °C
Outlet centre distance: 40 mm
Maximum percentage of glycol: 50 %
Medium: water, glycol solutions
Range △p: 25–400 kPa
Material: dezincification resistant brass DR

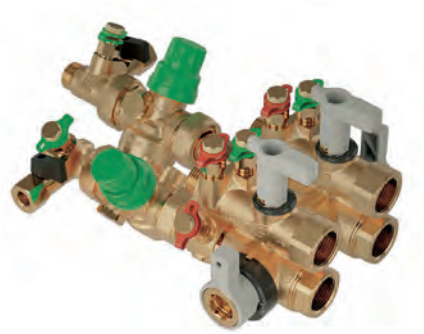

| Code | DN | Kv ($m^3/h$) | Flow rate regulation ($m^3/h$) | | |
|---|---|---|---|---|---|
| **149**500 H08 001 | DN 20 | 0,15 | 0,02–0,08 | 1 | - |
| **149**500 H20 001 | DN 20 | 0,5 | 0,08–0,20 | 1 | - |
| **149**500 H40 001 | DN 20 | 1,1 | 0,20–0,40 | 1 | - |
| **149**500 H80 001 | DN 20 | 2,25 | 0,40–0,80 | 1 | - |
| **149**500 1H2 001 | DN 20 | 3,9 | 0,60–1,20 | 1 | - |
| **149**500 H08 002 | DN 20 | 0,15 | 0,02–0,08 | 1 | - |
| **149**500 H20 002 | DN 20 | 0,5 | 0,08–0,20 | 1 | - |
| **149**500 H40 002 | DN 20 | 1,1 | 0,20–0,40 | 1 | - |
| **149**500 H80 002 | DN 20 | 2,25 | 0,40–0,80 | 1 | - |
| **149**500 1H2 002 | DN 20 | 3,9 | 0,60–1,20 | 1 | - |

**Single installation code 149500 ... 001**

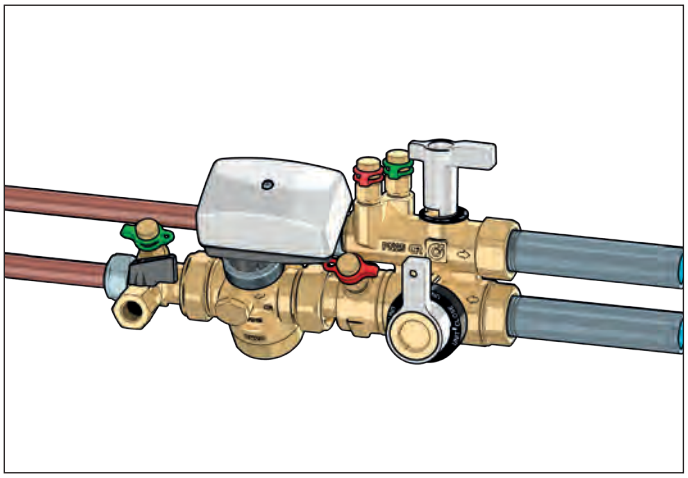

**Double installation code 149500 ... 001 + code 149500 ... 002**

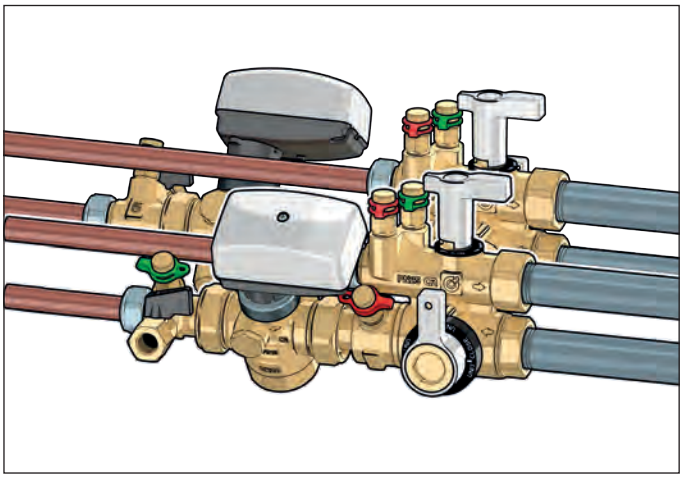

# AUTOMATIC FLOW RATE REGULATOR (AUTOFLOW®)

## Compact automatic flow rate regulator, in line



### 127
### AUTOFLOW

Compact automatic flow rate regulator, in line, with high resistance polymer cartridge.
Flow rates: 0,02–0,06 m3/h - Δp range: 20–200 kPa - Accuracy: ± 15 %.
Flow rates: 0,085–11,0 m3/h - Δp range: 15–200 kPa - Accuracy: ± 10 %.
PATENT

Maximum working pressure: 16 bar
Medium temperature range: 0–100 °C
Material: brass
Medium: water
Maximum percentage of glycol: 50 %

| Code | Connection | Flow rates ($m^3/h$) | | |
|---|---|---|---|---|
| **127**141*** | 1/2″F | 0,02; 0,04; 0,06; 0,085; 0,12; 0,15; 0,2; 0,25; 0,3; 0,35; 0,4; 0,5; 0,6; 0,7; 0,8; 0,9; 1,0; 1,2; 1,4 | 1 | - |
| **127**151*** | 3/4″F | 0,02; 0,04; 0,06; 0,085; 0,12; 0,15; 0,2; 0,25; 0,3; 0,35; 0,4; 0,5; 0,6; 0,7; 0,8; 0,9; 1,0; 1,2; 1,4; 1,6 | 1 | - |
| **127**161*** | 1″F | 0,5; 0,6; 0,7; 0,8; 0,9; 1,0; 1,2; 1,4; 1,6; 1,8; 2,0; 2,25; 2,5; 2,75; 3,0; 3,25; 3,5; 3,75; 4,0; 4,25; 4,5; 4,75; 5,0 | 1 | - |
| **127**171*** | 1 1/4″F | 0,5; 0,6; 0,7; 0,8; 0,9; 1,0; 1, ; 1,4; 1,6; 1,8; 2,0; 2,25; 2,5; 2,75; 3,0; 3,25; 3,5; 3,75; 4,0; 4,25; 4,5; 4,75; 5,0 | 1 | - |
| **127**181*** | 1 1/2″F | 4,5; 4,75; 5,0; 5,5; 6,0; 6,5; 7,0; 7,5; 8,0; 8,5; 9,0; 9,5; 10,0; 11,0 | 1 | - |
| **127**191*** | 2″F | 4,5; 4,75; 5,0; 5,5; 6,0; 6,5; 7,0; 7,5; 8,0; 8,5; 9,0; 9,5; 10,0; 11,0 | 1 | - |

## Compact automatic flow rate regulator




### 128
### AUTOFLOW

Compact automatic flow rate regulator. AUTOFLOW® cartridge in high resistance polymer.
Flow rates: 0,02–0,06 m3/h - Δp range: 20–200 kPa - Accuracy: ± 15 %.
Flow rates: 0,085–5,0 m3/h - Δp range: 15–200 kPa - Accuracy: ± 10 %.

Maximum working pressure: 16 bar
Medium temperature range: 0–100 °C
Material: brass
Medium: glycol solutions
Maximum percentage of glycol: 50 %

| Code | Connection | Flow rates ($m^3/h$) | | |
|---|---|---|---|---|
| **128**141*** | 1/2″F | 0,02; 0,04; 0,06; 0,085; 0,12; 0,15; 0,2; 0,25; 0,3; 0,35; 0,4; 0,5; 0,6; 0,7; 0,8; 0,9; 1,0; 1,2 | 1 | - |
| **128**151*** | 3/4″F | 0,02; 0,04; 0,06; 0,085; 0,12; 0,15; 0,2; 0,25; 0,3; 0,35; 0,4; 0,5; 0,6; 0,7; 0,8; 0,9; 1,0; 1,2; 1,4 | 1 | - |
| **128**161*** | 1″F | 0,5; 0,6; 0,7; 0,8; 0,9; 1,0; 1,2; 1,4; 1,6; 1,8; 2,0; 2,2; 2,5; 2,7; 3,0; 3,2; 3,5; 3,7; 4,0; 4,2; 4,5; 4,7; 5,0 | 1 | - |
| **128**171*** | 1 1/4″F | 0,5; 0,6; 0,7; 0,8; 0,9; 1,0; 1,2; 1,4; 1,6; 1,8; 2,0; 2,2; 2,5; 2,7; 3,0; 3,2; 3,5; 3,7; 4,0; 4,2; 4,5; 4,7; 5,0 | 1 | - |




### 128
Insulation for AUTOFLOW 128 series.

| Code | Article use | | |
|---|---|---|---|
| CBN128141 | 128141***, 128151*** | 1 | - |
| CBN128161 | 128161***, 128171*** | 1 | - |

*** *For code completion see method of coding on page 254*

## Automatic flow rate regulator




# 126
# AUTOFLOW

Automatic flow rate regulator with high-performance polymer cartridge.
Fitted for connection of pressure ports and drain valve.
Accuracy: ± 10 %. Flow rates: 0,085–11,0 m3/h.
PATENT

Maximum working pressure: 25 bar
Medium temperature range: -20–100 °C
Range △p: 15–200 kPa
Material: dezincification resistant brass DR
Medium: water
Maximum percentage of glycol: 50 %

| Code | Connection | Flow rates ($m^3/h$) | | |
|---|---|---|---|---|
| **126**141*** | 1/2″ F | 0,085; 0,12; 0,15; 0,2; 0,25; 0,3; 0,35; 0,4; 0,5; 0,6; 0,7; 0,8; 0,9; 1,0; 1,2 | 1 | - |
| **126**151*** | 3/4″ F | 0,085; 0,12; 0,15; 0,2; 0,25; 0,3; 0,35; 0,4; 0,5; 0,6; 0,7; 0,8; 0,9; 1,0; 1,2; 1,4; 1,6 | 1 | - |
| **126**161*** | 1″ F | 0,5; 0,6; 0,7; 0,8; 0,9; 1,0; 1,2; 1,4; 1,6; 1,8; 2,0; 2,25; 2,5; 2,75; 3,0; 3,25; 3,5; 3,75; 4,0; 4,25; 4,5; 4,75; 5,0 | 1 | - |
| **126**171*** | 1 1/4″ F | 0,5; 0,6; 0,7; 0,8; 0,9; 1,0; 1,2; 1,4; 1,6; 1,8; 2,0; 2,25; 2,5; 2,75; 3,0; 3,25; 3,5; 3,75; 4,0; 4,25; 4,5; 4,75; 5,0 | 1 | - |
| **126**181*** | 1 1/2″ F | 5,5; 6,0; 6,5; 7,0; 7,5; 8,0; 8,5; 9,0; 9,5; 10,0; 11,0 | 1 | - |
| **126**191*** | 2″ F | 5,5; 6,0; 6,5; 7,0; 7,5; 8,0; 8,5; 9,0; 9,5; 10,0; 11,0 | 1 | - |

## Automatic flow rate regulator and ball valve




# 121
# AUTOFLOW

Combination of automatic flow rate regulator with high-performance polymer cartridge and ball valve.
Accuracy: ± 5 %. Flow rates: 0,085–11,0 m3/h.
Designed for pressure point and drain valve connection.
PATENT

Maximum working pressure: 25 bar
Medium temperature range: -20–100 °C
Range △p: 15–200 kPa
Material: dezincification resistant brass DR
Medium: water
Maximum percentage of glycol: 50 %

| Code | Connection | Flow rates ($m^3/h$) | | |
|---|---|---|---|---|
| **121**141*** | 1/2″ F | 0,085; 0,12; 0,15; 0,2; 0,25; 0,3; 0,35; 0,4; 0,5; 0,6; 0,7; 0,8; 0,9; 1,0; 1,2 | 1 | - |
| **121**151*** | 3/4″ F | 0,085; 0,12; 0,15; 0,2; 0,25; 0,3; 0,35; 0,4; 0,5; 0,6; 0,7; 0,8; 0,9; 1,0; 1,2; 1,4; 1,6 | 1 | - |
| **121**161*** | 1″ F | 0,5; 0,6; 0,7; 0,8; 0,9; 1,0; 1,2; 1,4; 1,6; 1,8; 2,0; 2,25; 2,5; 2,75; 3,0; 3,25; 3,5; 3,75; 4,0; 4,25; 4,5; 4,75; 5,0 | 1 | - |
| **121**171*** | 1 1/4″ F | 0,5; 0,6; 0,7; 0,8; 0,9; 1,0; 1,2; 1,4; 1,6; 1,8; 2,0; 2,25; 2,5; 2,75; 3,0; 3,25; 3,5; 3,75; 4,0; 4,25; 4,5; 4,75; 5,0 | 1 | - |
| **121**181*** | 1 1/2″ F | 5,5; 6,0; 6,5; 7,0; 7,5; 8,0; 8,5; 9,0; 9,5; 10,0; 11,0 | 1 | - |
| **121**191*** | 2″ F | 5,5; 6,0; 6,5; 7,0; 7,5; 8,0; 8,5; 9,0; 9,5; 10,0; 11,0 | 1 | - |

*** *For code completion see method of coding on page 254*

# Method for coding AUTOFLOW® 121 - 126 - 127 - 128 series

For correct identification of the device, fill in the form indicating: series, size, flow rate and Δp range.

Complete code

| 1st | 2nd | 3rd | 4th | 5th | 6th | 7th | 8th | 9th |
|---|---|---|---|---|---|---|---|---|
| | | | 1 | | 1 | | | |
| SERIES | | | | SIZE | | FLOW RATE - Δp RANGE | | |

## SERIES

1st 2nd 3rd

The first three digits indicate the series

| | |
|---|---|
| 121 | AUTOFLOW® regulator and ball valve |
| 126 | AUTOFLOW® regulator |
| 127 | AUTOFLOW® compact regulator |
| 128 | AUTOFLOW® compact regulator |

## SIZE

5th

The fifth digit indicates the size

| Size | 1/2" | 3/4" | 1" | 1 1/4" | 1 1/2" | 2" |
|---|---|---|---|---|---|---|
| Digit | 4 | 5 | 6 | 7 | 8 | 9 |

## FLOW RATE - Δp RANGE

7th 8th 9th

The last three digits indicate the available flow rate

### Δp range 20–200 kPa

| m³/h | digit | m³/h | digit | m³/h | digit |
|---|---|---|---|---|---|
| 0,02 | M02 | 0,04 | M04 | 0,06 | M06 |

### Δp range 15–200 kPa

| m³/h | digit | m³/h | digit | m³/h | digit | m³/h | digit | m³/h | digit | m³/h | digit |
|---|---|---|---|---|---|---|---|---|---|---|---|
| 0,085 | M08 | 0,40 | M40 | 1,20 | 1M2 | 2,75 | 2M7 | 4,50 | 4M5 | 7,50 | 7M5 |
| 0,12 | M12 | 0,50 | M50 | 1,40 | 1M4 | 3,00 | 3M0 | 4,75 | 4M7 | 8,00 | 8M0 |
| 0,15 | M15 | 0,60 | M60 | 1,60 | 1M6 | 3,25 | 3M2 | 5,00 | 5M0 | 8,50 | 8M5 |
| 0,20 | M20 | 0,70 | M70 | 1,80 | 1M8 | 3,50 | 3M5 | 5,50 | 5M5 | 9,00 | 9M0 |
| 0,25 | M25 | 0,80 | M80 | 2,00 | 2M0 | 3,75 | 3M7 | 6,00 | 6M0 | 9,50 | 9M5 |
| 0,30 | M30 | 0,90 | M90 | 2,25 | 2M2 | 4,00 | 4M0 | 6,50 | 6M5 | 10,0 | 10M |
| 0,35 | M35 | 1,00 | 1M0 | 2,50 | 2M5 | 4,25 | 4M2 | 7,00 | 7M0 | 11,0 | 11M |

**Minimum differential pressure required**

This is given by the sum of two values:
1. the minimum working Δp of the AUTOFLOW® cartridge;
2. the Δp required for the nominal flow rate to pass through the valve body. This value can be determined on the basis of the values of Kv shown above referring to the valve body.

Pump head $H = \Delta p_{circuit} + \Delta p_{requise}$

# Spare technopolymer cartridges, for 127 series



Spare technopolymer cartridge.
For 127 series - **bodies sizes 1/2" and 3/4"**.

| Code | Article use | Nominal flow rate ($m^3/h$) | | |
|---|---|---|---|---|
| 02M02 XXG | 127141***, 127151*** | 0,02 | 1 | - |
| 02M04 XXG | 127141***, 127151*** | 0,04 | 1 | - |
| 02M06 XXG | 127141***, 127151*** | 0,06 | 1 | - |
| 02M08 XXG | 127141***, 127151*** | 0,085 | 1 | - |
| 02M12 XXG | 127141***, 127151*** | 0,12 | 1 | - |
| 02M15 XXG | 127141***, 127151*** | 0,15 | 1 | - |
| 02M20 XXG | 127141***, 127151*** | 0,2 | 1 | - |
| 02M25 XXG | 127141***, 127151*** | 0,25 | 1 | - |
| 02M30 XXG | 127141***, 127151*** | 0,3 | 1 | - |
| 02M35 XXG | 127141***, 127151*** | 0,35 | 1 | - |
| 02M40 XXG | 127141***, 127151*** | 0,4 | 1 | - |
| 02M50 XXG | 127141***, 127151*** | 0,5 | 1 | - |
| 02M60 XXG | 127141***, 127151*** | 0,6 | 1 | - |
| 02M70 XXG | 127141***, 127151*** | 0,7 | 1 | - |
| 02M80 XXG | 127141***, 127151*** | 0,8 | 1 | - |
| 02M90 XXG | 127141***, 127151*** | 0,9 | 1 | - |
| 021M0 XXG | 127141***, 127151*** | 1 | 1 | - |
| 021M2 XXG | 127141***, 127151*** | 1,2 | 1 | - |
| 021M4 XXG | 127141***, 127151*** | 1,4 | 1 | - |
| 021M6 XXG | 127141***, 127151*** | 1,6 | 1 | - |



Spare technopolymer cartridge.
For 127 series - **bodies sizes 1" and 1 1/4"**, with adapter.

| Code | Article use | Nominal flow rate ($m^3/h$) | | |
|---|---|---|---|---|
| 02M50 XXH | 127161***, 127171*** | 0,5 | 1 | - |
| 02M60 XXH | 127161***, 127171*** | 0,6 | 1 | - |
| 02M70 XXH | 127161***, 127171*** | 0,7 | 1 | - |
| 02M80 XXH | 127161***, 127171*** | 0,8 | 1 | - |
| 02M90 XXH | 127161***, 127171*** | 0,9 | 1 | - |
| 021M0 XXH | 127161***, 127171*** | 1 | 1 | - |
| 021M2 XXH | 127161***, 127171*** | 1,2 | 1 | - |
| 021M4 XXH | 127161***, 127171*** | 1,4 | 1 | - |
| 021M6 XXH | 127161***, 127171*** | 1,6 | 1 | - |



Spare technopolymer cartridge.
For 127 series - **bodies sizes 1" and 1 1/4"**.

| Code | Article use | Nominal flow rate ($m^3/h$) | | |
|---|---|---|---|---|
| 041M8 XXH | 127161***, 127171*** | 1,8 | 1 | - |
| 042M0 XXH | 127161***, 127171*** | 2 | 1 | - |
| 042M2 XXH | 127161***, 127171*** | 2,25 | 1 | - |
| 042M5 XXH | 127161***, 127171*** | 2,5 | 1 | - |
| 042M7 XXH | 127161***, 127171*** | 2,75 | 1 | - |
| 043M0 XXH | 127161***, 127171*** | 3 | 1 | - |
| 043M2 XXH | 127161***, 127171*** | 3,25 | 1 | - |
| 043M5 XXH | 127161***, 127171*** | 3,5 | 1 | - |
| 043M7 XXH | 127161***, 127171*** | 3,75 | 1 | - |
| 044M0 XXH | 127161***, 127171*** | 4 | 1 | - |
| 044M2 XXH | 127161***, 127171*** | 4,25 | 1 | - |
| 044M5 XXH | 127161***, 127171*** | 4,5 | 1 | - |
| 044M7 XXH | 127161***, 127171*** | 4,75 | 1 | - |
| 045M0 XXH | 127161***, 127171*** | 5 | 1 | - |



Spare technopolymer cartridge.
For 127 series - **bodies sizes 1 1/2" and 2"**, with adapter.

| Code | Article use | Nominal flow rate ($m^3/h$) | | |
|---|---|---|---|---|
| 044M5 XXI | 127181***, 127191*** | 4,5 | 1 | - |
| 044M7 XXI | 127181***, 127191*** | 4,75 | 1 | - |
| 045M0 XXI | 127181***, 127191*** | 5 | 1 | - |



Spare polymer cartridge.
For 127 series - **bodies sizes 1 1/2" and 2"**.

| Code | Article use | Nominal flow rate ($m^3/h$) | | |
|---|---|---|---|---|
| 055M5 XXI | 127181***, 127191*** | 5,5 | 1 | - |
| 056M0 XXI | 127181***, 127191*** | 6 | 1 | - |
| 056M5 XXI | 127181***, 127191*** | 6,5 | 1 | - |
| 057M0 XXI | 127181***, 127191*** | 7 | 1 | - |
| 057M5 XXI | 127181***, 127191*** | 7,5 | 1 | - |
| 058M0 XXI | 127181***, 127191*** | 8 | 1 | - |
| 058M5 XXI | 127181***, 127191*** | 8,5 | 1 | - |
| 059M0 XXI | 127181***, 127191*** | 9 | 1 | - |
| 059M5 XXI | 127181***, 127191*** | 9,5 | 1 | - |
| 0510M XXI | 127181***, 127191*** | 10 | 1 | - |
| 0511M XXI | 127181***, 127191*** | 11 | 1 | - |

**Spare AUTOFLOW® cartridge complete with label for fixing to the body of the AUTOFLOW® device.**

# Spare technopolymer cartridges, for 128 series



Spare technopolymer cartridge.
For 128 series - **bodies sizes 1/2" and 3/4"**.

| Code | Article use | Nominal flow rate ($m^3/h$) | | |
|---|---|---|---|---|
| 02M02 XXL | 128141***, 128151*** | 0,02 | 1 | - |
| 02M04 XXL | 128141***, 128151*** | 0,04 | 1 | - |
| 02M06 XXL | 128141***, 128151*** | 0,06 | 1 | - |
| 02M08 XXL | 128141***, 128151*** | 0,085 | 1 | - |
| 02M12 XXL | 128141***, 128151*** | 0,12 | 1 | - |
| 02M15 XXL | 128141***, 128151*** | 0,15 | 1 | - |
| 02M20 XXL | 128141***, 128151*** | 0,2 | 1 | - |
| 02M25 XXL | 128141***, 128151*** | 0,25 | 1 | - |
| 02M30 XXL | 128141***, 128151*** | 0,3 | 1 | - |
| 02M35 XXL | 128141***, 128151*** | 0,35 | 1 | - |
| 02M40 XXL | 128141***, 128151*** | 0,4 | 1 | - |
| 02M50 XXL | 128141***, 128151*** | 0,5 | 1 | - |
| 02M60 XXL | 128141***, 128151*** | 0,6 | 1 | - |
| 02M70 XXL | 128141***, 128151*** | 0,7 | 1 | - |
| 02M80 XXL | 128141***, 128151*** | 0,8 | 1 | - |
| 02M90 XXL | 128141***, 128151*** | 0,9 | 1 | - |
| 021M0 XXL | 128141***, 128151*** | 1 | 1 | - |
| 021M2 XXL | 128141***, 128151*** | 1,2 | 1 | - |
| 021M4 XXL | 128141***, 128151*** | 1,4 | 1 | - |



Spare technopolymer cartridge.
For 128 series - **bodies sizes 1" and 1 1/4"**, with adapter.

| Code | Article use | Nominal flow rate ($m^3/h$) | | |
|---|---|---|---|---|
| 02M50 XXM | 128161***, 128171*** | 0,5 | 1 | - |
| 02M60 XXM | 128161***, 128171*** | 0,6 | 1 | - |
| 02M70 XXM | 128161***, 128171*** | 0,7 | 1 | - |
| 02M80 XXM | 128161***, 128171*** | 0,8 | 1 | - |
| 02M90 XXM | 128161***, 128171*** | 0,9 | 1 | - |
| 021M0 XXM | 128161***, 128171*** | 1,00 | 1 | - |
| 021M2 XXM | 128161***, 128171*** | 1,20 | 1 | - |
| 021M4 XXM | 128161***, 128171*** | 1,40 | 1 | - |
| 021M6 XXM | 128161***, 128171*** | 1,60 | 1 | - |



Spare technopolymer cartridge.
For 128 series - **bodies sizes 1" and 1 1/4"**.

| Code | Article use | Nominal flow rate ($m^3/h$) | | |
|---|---|---|---|---|
| 041M8 XXM | 128161***, 128171*** | 1,80 | 1 | - |
| 042M0 XXM | 128161***, 128171*** | 2 | 1 | - |
| 042M2 XXM | 128161***, 128171*** | 2,25 | 1 | - |
| 042M5 XXM | 128161***, 128171*** | 2,5 | 1 | - |
| 042M7 XXM | 128161***, 128171*** | 2,75 | 1 | - |
| 043M0 XXM | 128161***, 128171*** | 3 | 1 | - |
| 043M2 XXM | 128161***, 128171*** | 3,25 | 1 | - |
| 043M5 XXM | 128161***, 128171*** | 3,5 | 1 | - |
| 043M7 XXM | 128161***, 128171*** | 3,75 | 1 | - |
| 044M0 XXM | 128161***, 128171*** | 4 | 1 | - |
| 044M2 XXM | 128161***, 128171*** | 4,25 | 1 | - |
| 044M5 XXM | 128161***, 128171*** | 4,5 | 1 | - |
| 044M7 XXM | 128161***, 128171*** | 4,75 | 1 | - |
| 045M0 XXM | 128161***, 128171*** | 5 | 1 | - |

**Spare AUTOFLOW® cartridge complete with label for fixing to the body of the AUTOFLOW® device.**

# Spare technopolymer cartridges, for 121 and 126 series



Spare technopolymer cartridge.
For 121 and 126 series - **bodies sizes 1/2" and 3/4"**.

| Code | Article use | Nominal flow rate ($m^3/h$) | | |
|---|---|---|---|---|
| 02M08 XXX | 121141***, 121151***, 126141***, 126151*** | 0,085 | 1 | - |
| 02M12 XXX | 121141***, 121151***, 126141***, 126151*** | 0,12 | 1 | - |
| 02M15 XXX | 121141***, 121151***, 126141***, 126151*** | 0,15 | 1 | - |
| 02M20 XXX | 121141***, 121151***, 126141***, 126151*** | 0,2 | 1 | - |
| 02M25 XXX | 121141***, 121151***, 126141***, 126151*** | 0,25 | 1 | - |
| 02M30 XXX | 121141***, 121151***, 126141***, 126151*** | 0,3 | 1 | - |
| 02M35 XXX | 121141***, 121151***, 126141***, 126151*** | 0,35 | 1 | - |
| 02M40 XXX | 121141***, 121151***, 126141***, 126151*** | 0,4 | 1 | - |
| 02M50 XXX | 121141***, 121151***, 126141***, 126151*** | 0,5 | 1 | - |
| 02M60 XXX | 121141***, 121151***, 126141***, 126151*** | 0,6 | 1 | - |
| 02M70 XXX | 121141***, 121151***, 126141***, 126151*** | 0,7 | 1 | - |
| 02M80 XXX | 121141***, 121151***, 126141***, 126151*** | 0,8 | 1 | - |
| 02M90 XXX | 121141***, 121151***, 126141***, 126151*** | 0,9 | 1 | - |
| 021M0 XXX | 121141***, 121151***, 126141***, 126151*** | 1 | 1 | - |
| 021M2 XXX | 121141***, 121151***, 126141***, 126151*** | 1,2 | 1 | - |
| 021M4 XXX | 121141***, 121151***, 126141***, 126151*** | 1,4 | 1 | - |
| 021M6 XXX | 121141***, 121151***, 126141***, 126151*** | 1,6 | 1 | - |



Spare technopolymer cartridge.
For 121 and 126 series - **bodies sizes 1" and 1 1/4"**, with adapter.

| Code | Article use | Nominal flow rate ($m^3/h$) | | |
|---|---|---|---|---|
| 02M50 XXC | 121161***, 121171***, 126161***, 126171*** | 0,5 | 1 | - |
| 02M60 XXC | 121161***, 121171***, 126161***, 126171*** | 0,6 | 1 | - |
| 02M70 XXC | 121161***, 121171***, 126161***, 126171*** | 0,7 | 1 | - |
| 02M80 XXC | 121161***, 121171***, 126161***, 126171*** | 0,8 | 1 | - |
| 02M90 XXC | 121161***, 121171***, 126161***, 126171*** | 0,9 | 1 | - |
| 021M0 XXC | 121161***, 121171***, 126161***, 126171*** | 1 | 1 | - |
| 021M2 XXC | 121161***, 121171***, 126161***, 126171*** | 1,2 | 1 | - |
| 021M4 XXC | 121161***, 121171***, 126161***, 126171*** | 1,4 | 1 | - |
| 021M6 XXC | 121161***, 121171***, 126161***, 126171*** | 1,6 | 1 | - |



Spare technopolymer cartridge.
For 121 and 126 series - **bodies sizes 1" and 1 1/4"**.

| Code | Article use | Nominal flow rate ($m^3/h$) | | |
|---|---|---|---|---|
| 041M8 XXC | 121161***, 121171***, 126161***, 126171*** | 1,8 | 1 | - |
| 042M0 XXC | 121161***, 121171***, 126161***, 126171*** | 2 | 1 | - |
| 042M2 XXC | 121161***, 121171***, 126161***, 126171*** | 2,25 | 1 | - |
| 042M5 XXC | 121161***, 121171***, 126161***, 126171*** | 2,5 | 1 | - |
| 042M7 XXC | 121161***, 121171***, 126161***, 126171*** | 2,75 | 1 | - |
| 043M0 XXC | 121161***, 121171***, 126161***, 126171*** | 3 | 1 | - |
| 043M2 XXC | 121161***, 121171***, 126161***, 126171*** | 3,25 | 1 | - |
| 043M5 XXC | 121161***, 121171***, 126161***, 126171*** | 3,5 | 1 | - |
| 043M7 XXC | 121161***, 121171***, 126161***, 126171*** | 3,75 | 1 | - |
| 044M0 XXC | 121161***, 121171***, 126161***, 126171*** | 4 | 1 | - |
| 044M2 XXC | 121161***, 121171***, 126161***, 126171*** | 4,25 | 1 | - |
| 044M5 XXC | 121161***, 121171***, 126161***, 126171*** | 4,5 | 1 | - |
| 044M7 XXC | 121161***, 121171***, 126161***, 126171*** | 4,75 | 1 | - |
| 045M0 XXC | 121161***, 121171***, 126161***, 126171*** | 5 | 1 | - |



Spare technopolymer cartridge.
For 121 and 126 series - **bodies sizes 1 1/2" and 2"**.

| Code | Article use | Nominal flow rate ($m^3/h$) | | |
|---|---|---|---|---|
| 055M5 XXD | 121181***, 121191***, 126181***, 126191*** | 5,5 | 1 | - |
| 056M0 XXD | 121181***, 121191***, 126181***, 126191*** | 6 | 1 | - |
| 056M5 XXD | 121181***, 121191***, 126181***, 126191*** | 6,5 | 1 | - |
| 057M0 XXD | 121181***, 121191***, 126181***, 126191*** | 7 | 1 | - |
| 057M5 XXD | 121181***, 121191***, 126181***, 126191*** | 7,5 | 1 | - |
| 058M0 XXD | 121181***, 121191***, 126181***, 126191*** | 8 | 1 | - |
| 058M5 XXD | 121181***, 121191***, 126181***, 126191*** | 8,5 | 1 | - |
| 059M0 XXD | 121181***, 121191***, 126181***, 126191*** | 9 | 1 | - |
| 059M5 XXD | 121181***, 121191***, 126181***, 126191*** | 9,5 | 1 | - |
| 0510M XXD | 121181***, 121191***, 126181***, 126191*** | 10 | 1 | - |
| 0511M XXD | 121181***, 121191***, 126181***, 126191*** | 11 | 1 | - |

**Spare AUTOFLOW® cartridge complete with metal tag for fixing to the body of the AUTOFLOW® device.**

# AUTOMATIC FLOW RATE REGULATOR (AUTOFLOW®)

## Automatic flow rate regulator with stainless steel cartridge and ball valve

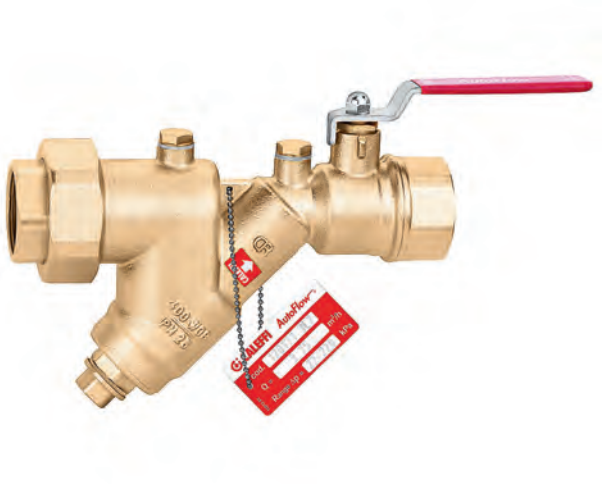

## 120
## AUTOFLOW

Combination of automatic flow rate regulator, with stainless steel cartridge, and ball valve.
Accuracy: ± 5 %.
Designed for pressure point and drain valve connection.

Maximum working pressure: 25 bar
Medium temperature range: 0–110 °C
Material: dezincification resistant brass DR
Medium: water, glycol solutions
Maximum percentage of glycol: 50 %

| Code | Connection | Flow rates ($m^3/h$) | Kv | | |
|---|---|---|---|---|---|
| **120**141*** (10–95 kPa) | 1/2″F | 0,3; 0,45; 0,5; 0,6; 0,7; 0,8; 0,9; 1,0 | 6,9 $m^3/h$ | 1 | - |
| **120**151*** (10–95 kPa) | 3/4″F | 0,3; 0,45; 0,5; 0,6; 0,7; 0,8; 0,9; 1,0 | 7,73 $m^3/h$ | 1 | - |
| **120**161*** (10–95 kPa) | 1″F | 0,7; 0,8; 0,9; 1,0 | 17,04 $m^3/h$ | 1 | - |
| **120**171*** (10–95 kPa) | 1 1/4″F | 0,7; 0,8; 0,9; 1,0 | 17,74 $m^3/h$ | 1 | - |
| **120**181*** (10–95 kPa) | 1 1/2″F | 2,75; 3,0; 3,25; 3,5; 3,75; 4,25; 5,0; 7,0 | 47,24 $m^3/h$ | 1 | - |
| **120**191*** (10–95 kPa) | 2″F | 2,75; 3,0; 3,25; 3,5; 3,75; 4,25; 5,0; 7,0 | 48,89 $m^3/h$ | 1 | - |
| **120**141*** (22–210 kPa) | 1/2″F | 0,12; 0,15; 0,2; 0,25; 0,35; 0,4; 0,6; 0,7; 0,8; 0,9; 1,2; 1,4; 1,6; 1,8 | 6,9 $m^3/h$ | 1 | - |
| **120**151*** (22–210 kPa) | 3/4″F | 0,12; 0,15; 0,2; 0,25; 0,35; 0,4; 0,6; 0,7; 0,8; 0,9; 1,2; 1,4; 1,6; 1,8 | 7,73 $m^3/h$ | 1 | - |
| **120**161*** (22–210 kPa) | 1″F | 1,0; 1,2; 1,4; 1,6; 1,8; 2,0; 2,25; 2,5; 2,75; 3,0; 3,25; 3,5; 3,75; 4,0; 4,25 | 17,04 $m^3/h$ | 1 | - |
| **120**171*** (22–210 kPa) | 1 1/4″F | 1,0; 1,2; 1,4; 1,6; 1,8; 2,0; 2,25; 2,5; 2,75; 3,0; 3,25; 3,5; 3,75; 4,0; 4,25 | 17,74 $m^3/h$ | 1 | - |
| **120**181*** (22–210 kPa) | 1 1/2″F | 4,0; 4,5; 5,5; 6,0; 6,5; 7,5; 8,0; 8,5; 9,0; 9,5; 10,0; 11,0 | 47,24 $m^3/h$ | 1 | - |
| **120**191*** (22–210 kPa) | 2″F | 4,0; 4,5; 5,5; 6,0; 6,5; 7,5; 8,0; 8,5; 9,0; 9,5; 10,0; 11,0 | 48,89 $m^3/h$ | 1 | - |
| **120**141*** (40–390 kPa) | 1/2″F | 0,25; 0,35; 0,45; 0,7; 0,9; 1,1; 1,4; 1,6; 1,8; 2,1; 2,25; 2,5; 2,75 | 6,9 $m^3/h$ | 1 | - |
| **120**151*** (40–390 kPa) | 3/4″F | 0,25; 0,35; 0,45; 0,7; 0,9; 1,1; 1,4; 1,6; 1,8; 2,1; 2,25; 2,5; 2,75 | 7,73 $m^3/h$ | 1 | - |
| **120**161*** (40–390 kPa) | 1″F | 1,6; 1,8; 2,1; 2,25; 2,5; 2,75; 3,0; 3,25; 3,5; 3,75; 4,0; 4,25; 4,5; 5,0; 5,5; 6,0 | 17,04 $m^3/h$ | 1 | - |
| **120**171*** (40–390 kPa) | 1 1/4″F | 1,6; 1,8; 2,1; 2,25; 2,5; 2,75; 3,0; 3,25; 3,5; 3,75; 4,0; 4,25; 4,5; 5,0; 5,5; 6,0 | 17,74 $m^3/h$ | 1 | - |
| **120**181*** (40–390 kPa) | 1 1/2″F | 3,0; 3,25; 3,5; 3,75; 4,0; 4,25; 4,5; 6,5; 7,0; 7,5; 8,0; 8,5; 9,0; 10,0; 11,0; 12,0; 13,0; 14,5; 15,5 | 47,24 $m^3/h$ | 1 | - |
| **120**191*** (40–390 kPa) | 2″F | 3,0; 3,25; 3,5; 3,75; 4,0; 4,25; 4,5; 6,5; 7,0; 7,5; 8,0; 8,5; 9,0; 10,0; 11,0; 12,0; 13,0; 14,5; 15,5 | 48,89 $m^3/h$ | 1 | - |

*** *For code completion see method of coding on page XXX*

**Minimum differential pressure required**

This is given by the sum of two values:
1. the minimum working Δp of the AUTOFLOW® cartridge;
2. the Δp required for the nominal flow rate to pass through the valve body. This value can be determined on the basis of the values of Kv shown above referring to the valve body.

Pump head H = $\Delta p_{circuit} + \Delta p_{requise}$

## Automatic flow rate regulator with stainless steel cartridge




# 125 AUTOFLOW

Automatic flow rate regulator with stainless steel cartridge.
Accuracy: ± 5 %.
Designed for pressure point and drain valve connection.

Maximum working pressure: 25 bar
Medium temperature range: -20–110 °C
Material: dezincification resistant brass DR
Medium: glycol solutions
Maximum percentage of glycol: 50 %

| Code | Connection | Flow rates ($m^3/h$) | Kv ($m^3/h$) | | |
|---|---|---|---|---|---|
| **125**141*** (10–95 kPa) | 1/2″ F | 0,3; 0,45; 0,5; 0,6; 0,7; 0,8; 0,9; 1,0 | 6,69 | 1 | - |
| **125**151*** (10–95 kPa) | 3/4″ F | 0,3; 0,45; 0,5; 0,6; 0,7; 0,8; 0,9; 1,0 | 7,58 | 1 | - |
| **125**161*** (10–95 kPa) | 1″ F | 0,7; 0,8; 0,9; 1,0 | 13,42 | 1 | - |
| **125**171*** (10–95 kPa) | 1 1/4″ F | 0,7; 0,8; 0,9; 1,0 | 13,26 | 1 | - |
| **125**181*** (10–95 kPa) | 1 1/2″ F | 2,75; 3,0; 3,25; 3,5; 3,75; 4,25; 5,0; 7,0 | 34,72 | 1 | - |
| **125**191*** (10–95 kPa) | 2″ F | 2,75; 3,0; 3,25; 3,5; 3,75; 4,25; 5,0; 7,0 | 37,38 | 1 | - |
| **125**141*** (22–210 kPa) | 1/2″ F | 0,12; 0,15; 0,2; 0,25; 0,35; 0,4; 0,6; 0,7; 0,8; 0,9; 1,2; 1,4; 1,6; 1,8 | 6,69 | 1 | - |
| **125**151 *** (22–210 kPa) | 3/4″ F | 0,12; 0,15; 0,2; 0,25; 0,35; 0,4; 0,6; 0,7; 0,8; 0,9; 1,2; 1,4; 1,6; 1,8 | 7,58 | | - |
| **125**161*** (22–210 kPa) | 1″ F | 1,0; 1,2; 1,4; 1,6; 1,8; 2,0; 2,25; 2,5; 2,75; 3,0; 3,25; 3,5; 3,75; 4,0; 4,25 | 13,42 | 1 | - |
| **125**171*** (22–210 kPa) | 1 1/4″ F | 1,0; 1,2; 1,4; 1,6; 1,8; 2,0; 2,25; 2,5; 2,75; 3,0; 3,25; 3,5; 3,75; 4,0; 4,25 | 13,26 | 1 | - |
| **125**181*** (22–210 kPa) | 1 1/2″ F | 4,0; 4,5; 5,5; 6,0; 6,5; 7,5; 8,0; 8,5; 9,0; 9,5; 10,0; 11,0 | 34,72 | 1 | - |
| **125**191*** (22–210 kPa) | 2″ F | 4,0; 4,5; 5,5; 6,0; 6,5; 7,5; 8,0; 8,5; 9,0; 9,5; 10,0; 11,0 | 37,38 | 1 | - |
| **125**101*** (22–210 kPa) | 2 1/2″ F | 9,0; 9,5; 10,0; 11,0; 12,0; 13,5; 14,5; 15,5; 16,5; 17,0 | 75,82 | 1 | - |
| **125**141*** (40–390 kPa) | 1/2″ F | 0,25; 0,35; 0,45; 0,7; 0,9; 1,1; 1,4; 1,6; 1,8; 2,1; 2,25; 2,5; 2,75 | 6,69 | 1 | - |
| **125**151*** (40–390 kPa) | 3/4″ F | 0,25; 0,35; 0,45; 0,7; 0,9; 1,1; 1,4; 1,6; 1,8; 2,1; 2,25; 2,5; 2,75 | 7,58 | 1 | - |
| **125**161*** (40–390 kPa) | 1″ F | 2,5; 2,75; 3,0; 3,25; 3,5; 3,75; 4,0; 4,25; 4,5; 5,0; 5,5; 6,0 | 13,42 | 1 | - |
| **125**171*** (40–390 kPa) | 1 1/4″ F | 2,5; 2,75; 3,0; 3,25; 3,5; 3,75; 4,0; 4,25; 4,5; 5,0; 5,5; 6,0 | 13,26 | 1 | - |
| **125**181*** (40–390 kPa) | 1 1/2″ F | 3,0; 3,25; 3,5; 3,75; 4,0; 4,25; 4,5; 6,5; 7,0; 7,5; 8,0; 8,5; 9,0; 10,0; 11,0; 12,0; 13,0; 14,5; 15,5 | 34,72 | 1 | - |
| **125**191*** (40–390 kPa) | 2″ F | 3,0; 3,25; 3,5; 3,75; 4,0; 4,25; 4,5; 6,5; 7,0; 7,5; 8,0; 8,5; 9,0; 10,0; 11,0; 12,0; 13,0; 14,5; 15,5 | 37,38 | 1 | - |
| **125**101*** (40–390 kPa) | 2 1/2″ F | 6,5; 7,0; 7,5; 8,0; 8,5; 9,0; 11,0; 18,0; 19,0; 20,0; 21,0; 22,0 | 75,82 | 1 | - |

*** *For code completion see method of coding on page XXX*

**Minimum differential pressure required**

This is given by the sum of two values:
1. the minimum working Δp of the AUTOFLOW® cartridge;
2. the Δp required for the nominal flow rate to pass through the valve body. This value can be determined on the basis of the values of Kv shown above referring to the valve body.

Pump head $H = \Delta p_{circuit} + \Delta p_{requise}$

# Method for coding AUTOFLOW® 120 - 125 series

For correct identification of the device, fill in the form indicating: series, size, flow rate and Δp range.

Complete code

| 1st | 2nd | 3rd | 4th | 5th | 6th | 7th | 8th | 9th |
|---|---|---|---|---|---|---|---|---|
| | | | 1 | | 1 | | | |
| SERIES | | | | SIZE | | FLOW RATE AND Δp RANGE | | |

## SERIES

1st 2nd 3rd

The first three digits indicate the series:

| | |
|---|---|
| 120 | AUTOFLOW® regulator and ball valve |
| 125 | AUTOFLOW® regulator |

## SIZE

5th

The fifth digit indicates the size:

| Size | 1/2" | 3/4" | 1" | 1 1/4" | 1 1/2" | 2" | 2 1/2" |
|---|---|---|---|---|---|---|---|
| Digit | 4 | 5 | 6 | 7 | 8 | 9 | 0 |

## FLOW RATE AND Δp RANGE

7th 8th 9th

The last three digits indicate the available flow rates.

### Δp range 10–95 kPa

| m³/h | digit | m³/h | digit | m³/h | digit | m³/h | digit |
|---|---|---|---|---|---|---|---|
| 0,30 | S30 | 0,70 | S70 | 2,75 | 2S7 | 3,75 | 3S7 |
| 0,45 | S45 | 0,80 | S80 | 3,00 | 3S0 | 4,25 | 4S2 |
| 0,50 | S50 | 0,90 | S90 | 3,25 | 3S2 | 5,00 | 5S0 |
| 0,60 | S60 | 1,00 | 1S0 | 3,50 | 3S5 | 7,00 | 7S0 |

### Δp range 22–210 kPa

| m³/h | digit | m³/h | digit | m³/h | digit | m³/h | digit | m³/h | digit | m³/h | digit |
|---|---|---|---|---|---|---|---|---|---|---|---|
| 0,12 | L12 | 0,70 | L70 | 1,80 | 1L8 | 3,50 | 3L5 | 6,50 | 6L5 | 11,0 | 11L |
| 0,15 | L15 | 0,80 | L80 | 2,00 | 2L0 | 3,75 | 3L7 | 7,50 | 7L5 | 12,0 | 12L |
| 0,20 | L20 | 0,90 | L90 | 2,25 | 2L2 | 4,00 | 4L0 | 8,00 | 8L0 | 13,5 | 13L |
| 0,25 | L25 | 1,00 | 1L0 | 2,50 | 2L5 | 4,25 | 4L2 | 8,50 | 8L5 | 14,5 | 14L |
| 0,35 | L35 | 1,20 | 1L2 | 2,75 | 2L7 | 4,50 | 4L5 | 9,00 | 9L0 | 15,5 | 15L |
| 0,40 | L40 | 1,40 | 1L4 | 3,00 | 3L0 | 5,50 | 5L5 | 9,50 | 9L5 | 16,5 | 16L |
| 0,60 | L60 | 1,60 | 1L6 | 3,25 | 3L2 | 6,00 | 6L0 | 10,0 | 10L | 17,0 | 17L |

### Δp range 40–390 kPa

| m³/h | digit | m³/h | digit | m³/h | digit | m³/h | digit | m³/h | digit | m³/h | digit | m³/h | digit |
|---|---|---|---|---|---|---|---|---|---|---|---|---|---|
| 0,25 | H25 | 1,40 | 1H4 | 2,75 | 2H7 | 4,25 | 4H2 | 7,00 | 7H0 | 11,0 | 11H | 19,0 | 19H |
| 0,35 | H35 | 1,60 | 1H6 | 3,00 | 3H0 | 4,50 | 4H5 | 7,50 | 7H5 | 12,0 | 12H | 20,0 | 20H |
| 0,45 | H45 | 1,80 | 1H8 | 3,25 | 3H2 | 5,00 | 5H0 | 8,00 | 8H0 | 13,0 | 13H | 21,0 | 21H |
| 0,70 | H70 | 2,10 | 2H1 | 3,50 | 3H5 | 5,50 | 5H5 | 8,50 | 8H5 | 14,5 | 14H | 22,0 | 22H |
| 0,90 | H90 | 2,25 | 2H2 | 3,75 | 3H7 | 6,00 | 6H0 | 9,00 | 9H0 | 15,5 | 15H | | |
| 1,10 | 1H1 | 2,50 | 2H5 | 4,00 | 4H0 | 6,50 | 6H5 | 10,0 | 10H | 18,0 | 18H | | |

## Spare stainless steel cartridges



Spare stainless steel cartridge.
**Δp range 10-95 kPa**.
For 120 and 125 series - bodies sizes 1/2 and 3/4".
Complete with metal tag and metal chain for fixing to the body of the AUTOFLOW® device.

| Code | Notes | Nominal flow rate ($m^3/h$) | | |
|---|---|---|---|---|
| 03S30 XXX | 1/2" - 3/4" | 0,3 | 1 | - |
| 03S45 XXX | 1/2" - 3/4" | 0,45 | 1 | - |
| 03S50 XXX | 1/2" - 3/4" | 0,5 | 1 | - |
| 03S60 XXX | 1/2" - 3/4" | 0,6 | 1 | - |
| 03S70 XXX | 1/2" - 3/4" | 0,7 | 1 | - |
| 03S80 XXX | 1/2" - 3/4" | 0,8 | 1 | - |
| 03S90 XXX | 1/2" - 3/4" | 0,9 | 1 | - |
| 031S0 XXX | 1/2" - 3/4" | 1 | 1 | - |
| 04S70 XXF | 1" - 1 1/4" | 0,7 | 1 | - |
| 04S80 XXF | 1" - 1 1/4" | 0,8 | 1 | - |
| 04S90 XXF | 1" - 1 1/4" | 0,9 | 1 | - |
| 041S0 XXF | 1" - 1 1/4" | 1 | 1 | - |
| 052S7 XXX | 1 1/2" - 2" | 2,75 | 1 | - |
| 053S0 XXX | 1 1/2" - 2" | 3 | 1 | - |
| 053S2 XXX | 1 1/2" - 2" | 3,25 | 1 | - |
| 053S5 XXX | 1 1/2" - 2" | 3,5 | 1 | - |
| 053S7 XXX | 1 1/2" - 2" | 3,75 | 1 | - |
| 054S2 XXX | 1 1/2" - 2" | 4,25 | 1 | - |
| 055S0 XXX | 1 1/2" - 2" | 5 | 1 | - |
| 057S0 XXX | 1 1/2" - 2" | 7 | 1 | - |



Spare stainless steel cartridge.
**Δp range 22-210 kPa**.
For 120 and 125 series.
Complete with metal tag and metal chain for fixing to the body of the AUTOFLOW® device.

| Code | Notes | Nominal flow rate ($m^3/h$) | | |
|---|---|---|---|---|
| 03L12 XXX | 1/2" - 3/4" | 0,12 | 1 | - |
| 03L15 XXX | 1/2" - 3/4" | 0,15 | 1 | - |
| 03L20 XXX | 1/2" - 3/4" | 0,2 | 1 | - |
| 03L25 XXX | 1/2" - 3/4" | 0,25 | 1 | - |
| 03L35 XXX | 1/2" - 3/4" | 0,35 | 1 | - |
| 03L40 XXX | 1/2" - 3/4" | 0,4 | 1 | - |
| 03L60 XXX | 1/2" - 3/4" | 0,6 | 1 | - |
| 03L70 XXX | 1/2" - 3/4" | 0,7 | 1 | - |
| 03L80 XXX | 1/2" - 3/4" | 0,8 | 1 | - |
| 03L90 XXX | 1/2" - 3/4" | 0,9 | 1 | - |
| 031L2 XXX | 1/2" - 3/4" | 1,2 | 1 | - |
| 031L4 XXX | 1/2" - 3/4" | 1,4 | 1 | - |
| 031L6 XXX | 1/2" - 3/4" | 1,6 | 1 | - |
| 031L8 XXX | 1/2" - 3/4" | 1,8 | 1 | - |
| 041L0 XXF | 1" - 1 1/4" | 1,00 | 1 | - |
| 041L2 XXF | 1" - 1 1/4" | 1,20 | 1 | - |
| 041L4 XXF | 1" - 1 1/4" | 1,40 | 1 | - |
| 041L6 XXF | 1" - 1 1/4" | 1,60 | 1 | - |
| 041L8 XXF | 1" - 1 1/4" | 1,80 | 1 | - |
| 042L0 XXF | 1" - 1 1/4" | 2,00 | 1 | - |
| 042L2 XXF | 1" - 1 1/4" | 2,25 | 1 | - |
| 042L5 XXF | 1" - 1 1/4" | 2,50 | 1 | - |
| 042L7 XXF | 1" - 1 1/4" | 2,75 | 1 | - |
| 043L0 XXF | 1" - 1 1/4" | 3,00 | 1 | - |
| 043L2 XXF | 1" - 1 1/4" | 3,25 | 1 | - |
| 043L5 XXF | 1" - 1 1/4" | 3,50 | 1 | - |
| 043L7 XXF | 1" - 1 1/4" | 3,75 | 1 | - |
| 044L0 XXF | 1" - 1 1/4" | 4,00 | 1 | - |
| 044L2 XXF | 1" - 1 1/4" | 4,25 | 1 | - |
| 054L0 XXX | 1 1/2" - 2" | 4,00 | 1 | - |
| 054L5 XXX | 1 1/2" - 2" | 4,50 | 1 | - |
| 055L5 XXX | 1 1/2" - 2" | 5,50 | 1 | - |
| 056L0 XXX | 1 1/2" - 2" | 6,00 | 1 | - |
| 056L5 XXX | 1 1/2" - 2" | 6,50 | 1 | - |
| 057L5 XXX | 1 1/2" - 2" | 7,50 | 1 | - |
| 058L0 XXX | 1 1/2" - 2" | 8,00 | 1 | - |
| 058L5 XXX | 1 1/2" - 2" | 8,50 | 1 | - |
| 059L0 XXX | 1 1/2" - 2" | 9,00 | 1 | - |
| 059L5 XXX | 1 1/2" - 2" | 9,50 | 1 | - |
| 0510L XXX | 1 1/2" - 2" | 10,00 | 1 | - |
| 0511L XXX | 1 1/2" - 2" | 11,00 | 1 | - |
| 069L0 XXF | 2 1/2" | 9 | 1 | - |
| 069L5 XXF | 2 1/2" | 9,5 | 1 | - |
| 0610L XXF | 2 1/2" | 10 | 1 | - |
| 0611L XXF | 2 1/2" | 11 | 1 | - |
| 0612L XXF | 2 1/2" | 12 | 1 | - |
| 0613L XXF | 2 1/2" | 13 | 1 | - |
| 0614L XXF | 2 1/2" | 14 | 1 | - |
| 0615L XXF | 2 1/2" | 15 | 1 | - |
| 0616L XXF | 2 1/2" | 16 | 1 | - |
| 0617L XXF | 2 1/2" | 17 | 1 | - |



Spare stainless steel cartridge.
**Δp range 40-390 kPa**.
For 120 and 125 series.
Complete with metal tag and metal chain for fixing to the body of the AUTOFLOW® device.

| Code | Notes | Nominal flow rate ($m^3/h$) | | |
|---|---|---|---|---|
| 03H25 XXX | 1/2" - 3/4" | 0,25 | 1 | - |
| 03H35 XXX | 1/2" - 3/4" | 0,35 | 1 | - |
| 03H45 XXX | 1/2" - 3/4" | 0,45 | 1 | - |
| 03H70 XXX | 1/2" - 3/4" | 0,7 | 1 | - |
| 03H90 XXX | 1/2" - 3/4" | 0,9 | 1 | - |
| 031H1 XXX | 1/2" - 3/4" | 1,1 | 1 | - |
| 031H4 XXX | 1/2" - 3/4" | 1,4 | 1 | - |
| 031H6 XXX | 1/2" - 3/4" | 1,6 | 1 | - |
| 031H8 XXX | 1/2" - 3/4" | 1,8 | 1 | - |
| 032H2 XXX | 1/2" - 3/4" | 2,25 | 1 | - |
| 032H5 XXX | 1/2" - 3/4" | 2,5 | 1 | - |
| 032H7 XXX | 1/2" - 3/4" | 2,75 | 1 | - |
| 042H5 XXF | 1" - 1 1/4" | 2,5 | 1 | - |
| 042H7 XXF | 1" - 1 1/4" | 2,75 | 1 | - |
| 043H0 XXF | 1" - 1 1/4" | 3 | 1 | - |
| 043H2 XXF | 1" - 1 1/4" | 3,25 | 1 | - |
| 043H5 XXF | 1" - 1 1/4" | 3,5 | 1 | - |
| 043H7 XXF | 1" - 1 1/4" | 3,75 | 1 | - |
| 044H0 XXF | 1" - 1 1/4" | 4 | 1 | - |
| 044H2 XXF | 1" - 1 1/4" | 4,25 | 1 | - |
| 044H5 XXF | 1" - 1 1/4" | 4,5 | 1 | - |
| 045H0 XXF | 1" - 1 1/4" | 5 | 1 | - |
| 045H5 XXF | 1" - 1 1/4" | 5,5 | 1 | - |
| 046H0 XXF | 1" - 1 1/4" | 6 | 1 | - |
| 043H0 XXX | 1 1/2" - 2" | 3 | 1 | - |
| 043H2 XXX | 1 1/2" - 2" | 3,25 | 1 | - |
| 043H5 XXX | 1 1/2" - 2" | 3,5 | 1 | - |
| 043H7 XXX | 1 1/2" - 2" | 3,75 | 1 | - |
| 044H0 XXX | 1 1/2" - 2" | 4 | 1 | - |
| 044H2 XXX | 1 1/2" - 2" | 4,25 | 1 | - |
| 044H5 XXX | 1 1/2" - 2" | 4,5 | 1 | - |
| 056H5 XXX | 1 1/2" - 2" | 6,5 | 1 | - |
| 057H0 XXX | 1 1/2" - 2" | 7 | 1 | - |
| 057H5 XXX | 1 1/2" - 2" - 2 1/2" | 7,5 | 1 | - |
| 058H0 XXX | 1 1/2" - 2" - 2 1/2" | 8 | 1 | - |
| 058H5 XXX | 1 1/2" - 2" - 2 1/2" | 8,5 | 1 | - |
| 059H0 XXX | 1 1/2" - 2" - 2 1/2" | 9 | 1 | - |
| 0510H XXX | 1 1/2" - 2" | 10 | 1 | - |
| 0511H XXX | 1 1/2" - 2" - 2 1/2" | 11 | 1 | - |
| 0512H XXX | 1 1/2" - 2" | 12 | 1 | - |
| 0513H XXX | 1 1/2" - 2" | 13 | 1 | - |
| 0514H XXX | 1 1/2" - 2" | 14,5 | 1 | - |
| 0515H XXX | 1 1/2" - 2" | 15,5 | 1 | - |
| 066H5 XXX | 2 1/2" | 6,5 | 1 | - |
| 067H0 XXX | 2 1/2" | 7 | 1 | - |

## Automatic flow regulator with stainless steel cartridge, flanged



# 103
# AUTOFLOW

Automatic flow rate regulator with stainless steel cartridge.
Complete with flanges, rods, seals and quick-fit pressure test ports.

Maximum working pressure: 16 bar
Medium temperature range: -20–110 °C
Material: cast iron
Medium: water
Maximum percentage of glycol: 50 %

| Code | Connection | Notes | Flow rate regulation | Range △p (kPa) | | |
|---|---|---|---|---|---|---|
| **103**111*** | DN 65 - PN 16 | EN 1092 -1 flange, PN 16 | 9–17 $m^3/h$ | 22–210 | 1 | - |
| **103**113*** | DN 65 - PN 16 | EN 1092 -1 flange, PN 16 | 18–23 $m^3/h$ | 40–390 | 1 | - |
| **103**114*** | DN 65 - PN 16 | EN 1092 -1 flange, PN 16 | 25–36 $m^3/h$ | 55–210 | 1 | - |
| **103**121*** | DN 80 - PN 16 | EN 1092 -1 flange, PN 16 | 9–17 $m^3/h$ | 22–210 | 1 | - |
| **103**123*** | DN 80 - PN 16 | EN 1092-1 flange, PN 16 | 18–23 $m^3/h$ | 40–390 | 1 | - |
| **103**124*** | DN 80 - PN 16 | EN 1092 -1 flange, PN 16 | 25–36 $m^3/h$ | 55–210 | 1 | - |
| **103**231*** | DN 100 - PN 25 | EN 1092-1 flange, PN 25 | 18–34 $m^3/h$ | 22–210 | 1 | - |
| **103**233*** | DN 100 - PN 25 | EN 1092-1 flange, PN 25 | 23–45 $m^3/h$ | 40–390 | 1 | - |
| **103**234*** | DN 100 - PN 25 | EN 1092-1 flange, PN 25 | 50–73 $m^3/h$ | 55–210 | 1 | - |
| **103**141*** | DN 125 - PN 16 | EN 1092 -1 flange, PN 16 | 18–24 $m^3/h$ | 22–210 | 1 | - |
| **103**143*** | DN 125 - PN 16 | EN 1092 -1 flange, PN 16 | 23–45 $m^3/h$ | 40–390 | 1 | - |
| **103**144*** | DN 125 - PN 16 | EN 1092 -1 flange, PN 16 | 50–73 $m^3/h$ | 55–210 | 1 | - |
| **103**151*** | DN 150 - PN 16 | EN 1092 -1 flange, PN 16 | 40–68 $m^3/h$ | 22–210 | 1 | - |
| **103**153*** | DN 150 - PN 16 | EN 1092 -1 flange, PN 16 | 40–91 $m^3/h$ | 40–390 | 1 | - |
| **103**154*** | DN 150 - PN 16 | EN 1092 -1 flange, PN 16 | 92–145 $m^3/h$ | 55–210 | 1 | - |
| **103**161*** | DN 200 | ANSI 150 flange | 80–119 $m^3/h$ | 22–210 | 1 | - |
| **103**163*** | DN 200 | ANSI 150 flange | 80–159 $m^3/h$ | 40–390 | 1 | - |
| **103**164*** | DN 200 | ANSI 150 flange | 160–255 $m^3/h$ | 55–210 | 1 | - |
| **103**171*** | DN 250 | ANSI 150 flange | 110–187 $m^3/h$ | 22–210 | 1 | - |
| **103**173*** | DN 250 | ANSI 150 flange | 110–250 $m^3/h$ | 40–390 | 1 | - |
| **103**174*** | DN 250 | ANSI 150 flange | 251–400 $m^3/h$ | 55–210 | 1 | - |
| **103**181*** | DN 300 | ANSI 150 flange | 150–255 $m^3/h$ | 22–210 | 1 | - |
| **103**183*** | DN 300 | ANSI 150 flange | 150–341 $m^3/h$ | 40–390 | 1 | - |
| **103**184*** | DN 300 | ANSI 150 flange | 342–545 $m^3/h$ | 55–210 | 1 | - |

**Minimum differential pressure required**

This is equal to the min. working Δp of the AUTOFLOW® cartridge (22, 40 or 55 kPa).
Pump head H = $\Delta p_{circuit} + \Delta p_{requise}$

**Available in DN 350 to DN 1000 sizes on request,with flow rates of up to 4400 m3/h.**
**To identify AUTOFLOW® devices and their codes correctly, contact Caleffi technical supporte in advance.**

## Method for coding AUTOFLOW® 103 series

For correct identification of the device, fill in the form indicating: size, Δp range and the flow rate.

Complete code

| 1st | 2nd | 3rd | 4th | 5th | 6th | 7th | 8th | 9th |
|---|---|---|---|---|---|---|---|---|
| 1 | 0 | 3 | 1 | | | | | |
| Series | | | (*) | SIZE | Δp RANGE | FLOW RATE | | |

**(*)** 4th — for codes 103231, 103233, 103234

| DN | 100 |
|---|---|
| Digit | 2 |

**SIZE** 5th — The fifth figure indicates the size:

| DN | 65 | 80 | 100 | 125 | 150 | 200 | 250 | 300 |
|---|---|---|---|---|---|---|---|---|
| Digit | 1 | 2 | 3 | 4 | 5 | 6 | 7 | 8 |

**Δp RANGE** 6th — The sixth figure indicates the differential pressure range (Δp range):

| kPa | 22–210 | 40–390 | 55–210 |
|---|---|---|---|
| Digit | 1 | 3 | 4 |

**FLOW RATE** 7th 8th 9th — The last three digits indicate the flow rate values.

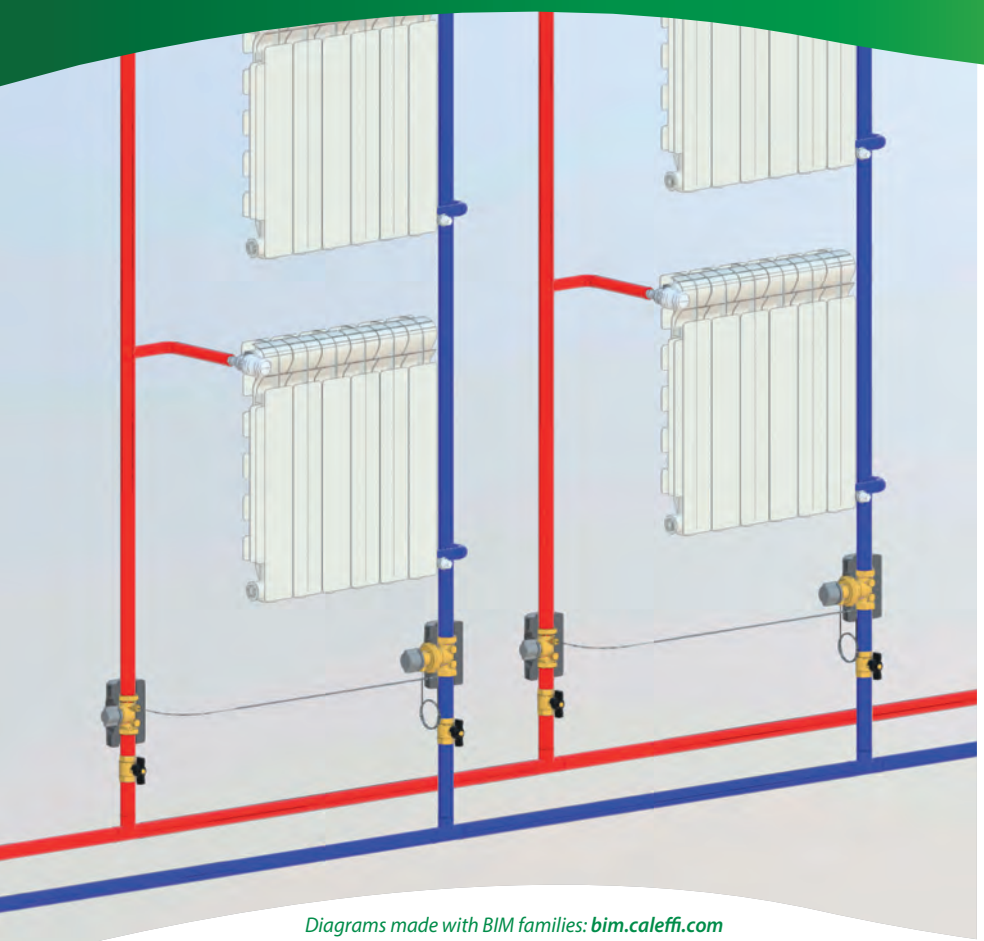

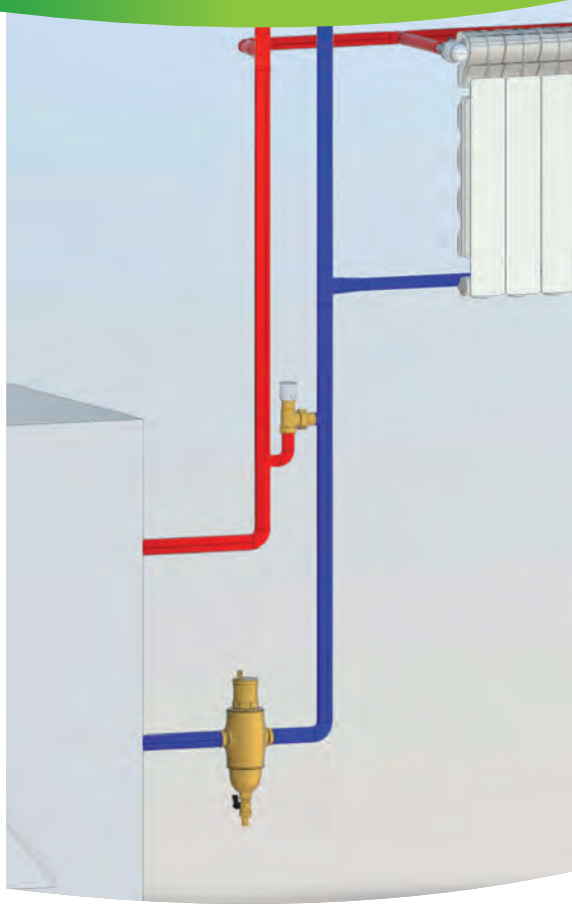

*Diagrams made with BIM families:* ***bim.caleffi.com***

## Differential pressure control valve (DPCV)
## Differential by-pass valve
## Measurement and control accessories

# DIFFERENTIAL PRESSURE CONTROL DEVICES

## Differential pressure control valve (DPCV)



### 140

Differential pressure control valve (DPCV).
Complete with capillary connection pipe to the valve on the flow pipe.
**With insulation**.

Medium temperature range: -10–120 °C
Capillary length: 1,5 m
Maximum percentage of glycol: 50 %
Medium: water, glycol solutions
Material: dezincification resistant brass DR

| Code | Connection | Notes | △p setting (mbar) | Maximum working pressure (bar) | | |
|---|---|---|---|---|---|---|
| **140**340 | 1/2″F | - | 50–300 | 16 | 1 | 5 |
| **140**440 | 1/2″F | - | 250–600 | 16 | 1 | - |
| **140**350 | 3/4″F | - | 50–300 | 16 | 1 | 5 |
| **140**450 | 3/4″F | - | 250–600 | 16 | 1 | - |
| **140**360 | 1″F | - | 50–300 | 16 | 1 | 5 |
| **140**460 | 1″F | - | 250–600 | 16 | 1 | 5 |
| **140**342 | 1/2″F | without insulation | 50–300 | 16 | 1 | 10 |
| **140**442 | 1/2″F | without insulation | 250–600 | 16 | 1 | 10 |
| **140**352 | 3/4″F | without insulation | 50–300 | 16 | 1 | 10 |
| **140**452 | 3/4″F | without insulation | 250–600 | 16 | 1 | 10 |
| **140**362 | 1″F | without insulation | 50–300 | 16 | 1 | 5 |
| **140**462 | 1″F | without insulation | 250–600 | 16 | 1 | 5 |



### 140

Differential pressure control valve (DPCV).
Complete with capillary connection pipe to the valve on the flow pipe.
**With insulation**.

Maximum working pressure: 10 bar
Medium temperature range: -10–120 °C
Capillary length: 1,5 m
Maximum percentage of glycol: 50 %
Medium: water, glycol solutions
Material: dezincification resistant brass DR

| Code | Connection | Notes | △p setting (mbar) | | |
|---|---|---|---|---|---|
| **140**370 | 1 1/4″F | - | 50–300 | 1 | - |
| **140**470 | 1 1/4″F | - | 250–600 | 1 | - |
| **140**380 | 1 1/2″F | - | 50–300 | 1 | - |
| **140**480 | 1 1/2″F | - | 250–600 | 1 | - |
| **140**372 | 1 1/4″F | without insulation | 50–300 | 1 | - |
| **140**472 | 1 1/4″F | without insulation | 250–600 | 1 | - |
| **140**382 | 1 1/2″F | without insulation | 50–300 | 1 | - |
| **140**482 | 1 1/2″F | without insulation | 250–600 | 1 | - |
| **140**392 | 2″F | without insulation | 50–300 | 1 | - |
| **140**492 | 2″F | without insulation | 250–600 | 1 | - |

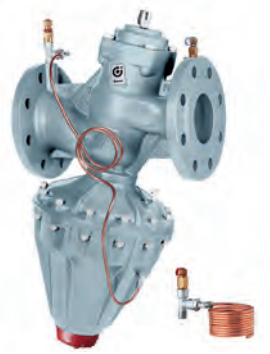

### 140

Differential pressure control valve (DPCV).
To be coupled with flat counterflanges EN 1092-1.
Complete with quick-fit pressure test ports.

Maximum working pressure: 16 bar
Medium temperature range: -10–120 °C
Material: cast iron
Medium: water, glycol solutions
Maximum percentage of glycol: 50 %

| Code | Connection | △p setting (mbar) | | |
|---|---|---|---|---|
| **140**506 | DN 65 - PN 16 | 200–800 | 1 | - |
| **140**606 | DN 65 - PN 16 | 800–1600 | 1 | - |
| **140**508 | DN 80 - PN 16 | 200–800 | 1 | - |
| **140**608 | DN 80 - PN 16 | 800–1600 | 1 | - |
| **140**510 | DN 100 - PN 16 | 200–800 | 1 | - |
| **140**610 | DN 100 - PN 16 | 800–1600 | 1 | - |
| **140**512 | DN 125 - PN 16 | 200–800 | 1 | - |
| **140**515 | DN 150 - PN 16 | 200–800 | 1 | - |



### 142

Shut-off and pre-regulation valve.
With insulation.

Maximum working pressure: 16 bar
Medium temperature range: -10–120 °C
Maximum percentage of glycol: 50 %
Medium: water, glycol solutions
Material: dezincification resistant brass DR

| Code | Connection | Notes | | |
|---|---|---|---|---|
| **142**140 | 1/2″F | - | 1 | 5 |
| **142**150 | 3/4″F | - | 1 | 5 |
| **142**160 | 1″F | - | 1 | 10 |
| **142**240 | 1/2″F | without insulation | 1 | 10 |
| **142**250 | 3/4″F | without insulation | 1 | 10 |
| **142**260 | 1″F | without insulation | 1 | - |



### 142

Shut-off and pre-regulation valve.
With insulation.

Maximum working pressure: 16 bar
Medium temperature range: -10–120 °C
Medium: water, glycol solutions
Maximum percentage of glycol: 50 %
Material: dezincification resistant brass DR

| Code | Connection | Notes | | |
|---|---|---|---|---|
| **142**170 | 1 1/4″F | - | 1 | - |
| **142**180 | 1 1/2″F | - | 1 | - |
| **142**270 | 1 1/4″F | without insulation | 1 | 5 |
| **142**280 | 1 1/2″F | without insulation | 1 | 5 |
| **142**290 | 2″F | without insulation | 1 | - |

## Differential by-pass valve



### 519

Differential by-pass valve, adjustable with graduated scale.

Maximum working pressure: 10 bar
Medium temperature range: 0–110 °C
Medium: water, glycol solutions
Maximum percentage of glycol: 30 %

WRAS APPROVED PRODUCT CERTIFICATION MARK

| Code | Inlet connection | Outlet connection | Setting range (m g.w.) | | |
|---|---|---|---|---|---|
| **519**002 | Ø 22 | Ø 22 | 1–6 | 1 | 50 |
| **519**500 | 3/4" F | 3/4" M | 1–6 | 1 | 50 |
| **519**504 | 3/4" F | 3/4" M | 10–40 | 1 | 50 |
| **519**700 | 1 1/4" F | 1 1/4" M | 1–6 | 1 | 10 |
| **519**703 | 1 1/4" F | 1 1/4" M | 5–25 | 1 | 10 |



### 518

Differential by-pass valve, adjustable with graduated scale.

Maximum working pressure: 10 bar
Medium temperature range: 0–100 °C
Medium: water, glycol solutions
Maximum percentage of glycol: 30 %

| Code | Connection | Setting range (m g.w.) | | |
|---|---|---|---|---|
| **518**015 | 3/4" M | 1–6 | 1 | 25 |



### 518

Differential by-pass valve, adjustable with graduated scale.

Medium temperature range: 0–100 °C
Maximum percentage of glycol: 30 %
Medium: water, glycol solutions
Maximum working pressure: 10 bar

| Code | Connection | Setting range (m g.w.) | | |
|---|---|---|---|---|
| **518**500 | 3/4" F | 1–6 | 1 | 25 |
| **518**002 | Ø 22 | 1–6 | 1 | 25 |

## Measurement and control accessories



### 130

Electronic flow rate and differential pressure measuring station.
Supplied with shut-off valves and connection fittings.
Bluetooth® transmission between △p meter and remote control unit.
It can also be used to measure the flow rate of series 130 and 142 balancing valves, and the 149 unit.
Can be used for measuring △p on automatic flow rate regulators.
Versions complete with remote control unit with Android® application for Smartphone and Tablet.

Measurement range: 0–1000 kPa
Maximum working pressure (static): 1000 kPa
Electric supply: with battery

CE

| Code | Notes | | |
|---|---|---|---|
| **130**006 | complete with remote control unit, with Android® application | 1 | - |
| **130**005 | without remote control unit, with Android® application | 1 | - |



### 100

Pair of fast-plug pressure/temperature test ports.
Cap cover facing available in:
- Red for upstream pressure test port.
- Green for downstream pressure test port.
EPDM seals.

Maximum working pressure: 30 bar
Medium temperature range: -5–130 °C
Material: brass

| Code | Connection | | |
|---|---|---|---|
| **100**000 | 1/4" M | 1 | 100 |



### 538

Manual shut-off cock.
Seals in non-asbestos fibre.

Maximum working pressure: 16 bar
Medium temperature range: -10–120 °C
Material: brass

| Code | Connection 1 | Connection 2 | | |
|---|---|---|---|---|
| **538**203 | 1/4" F | 1/4" M | 1 | - |



## 538

Drain cock with hose connection and cap.

Maximum working pressure: 10 bar
Medium temperature range: 5–110 °C

| Code | Connection | | |
|---|---|---|---|
| **538**201 | 1/4″ M | 1 | 100 |
| **538**400 | 1/2″ M | 1 | 100 |



## 140

Dual tee for pressure test ports.

| Code | Connection | | |
|---|---|---|---|
| **140**002 | 1/4″ M | 1 | - |



## 100

Pair of fittings with fast-plug syringe for connection of pressure ports to measuring instruments.

Maximum working pressure: 10 bar
Medium temperature range: 5–110 °C

| Code | Connection | | |
|---|---|---|---|
| **100**010 | 1/4″ F | 1 | - |

# REGULATING VALVES

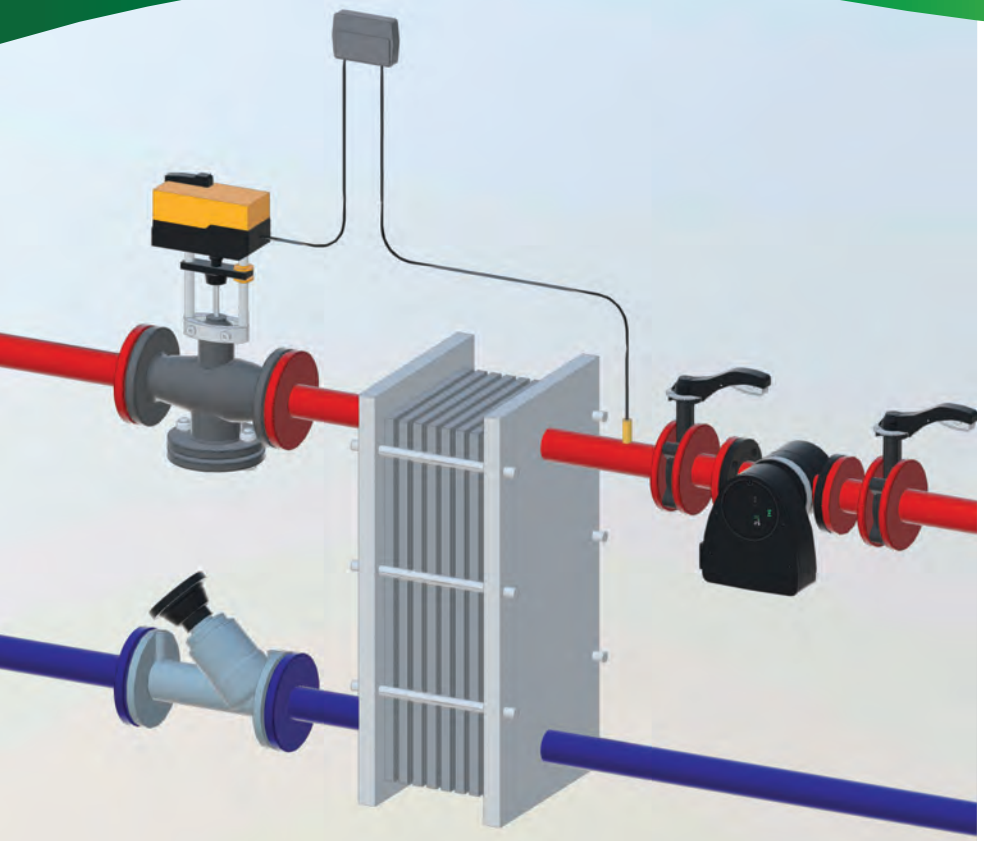



*Diagrams made with BIM families:* ***bim.caleffi.com***

**Brass regulating valve**
**Linear actuator for regulating brass valves**
**Cast iron regulating valve**
**Linear actuator for regulating cast iron valves**
**Cast iron mixing regulation valves**
**Actuators**
**Brass mixing regulation valves**
**Regulators**

# REGULATING GLOBE VALVES

## Brass regulating valve



### 636

**Two-way** regulating globe valve, threaded.
Equal percentage regulation.

Maximum working pressure: 16 bar
Medium temperature range: 0–100 °C
Nominal pressure: PN 16
Material: dezincification resistant brass DR

| Code | Connection | DN | Kv ($m^3/h$) | | |
|---|---|---|---|---|---|
| **636**400 | Rp 1/2″F | DN 15 | 4 | 1 | - |
| **636**500 | Rp 3/4″F | DN 20 | 6,3 | 1 | - |
| **636**600 | Rp 1″F | DN 25 | 10 | 1 | - |
| **636**700 | Rp 1 1/4″F | DN 32 | 16 | 1 | - |
| **636**800 | Rp 1 1/2″F | DN 40 | 22 | 1 | - |
| **636**900 | Rp 2″F | DN 50 | 28 | 1 | - |



### 636

**Three-way** regulating globe valve, threaded.
Equal percentage/linear regulation.

Maximum working pressure: 16 bar
Medium temperature range: 0–100 °C
Nominal pressure: PN 16
Material: dezincification resistant brass DR

| Code | Connection | DN | Kv ($m^3/h$) | | |
|---|---|---|---|---|---|
| **636**410 | Rp 1/2″F | DN 15 | 4 | 1 | - |
| **636**510 | Rp 3/4″F | DN 20 | 6,3 | 1 | - |
| **636**610 | Rp 1″F | DN 25 | 10 | 1 | - |
| **636**710 | Rp 1 1/4″F | DN 32 | 16 | 1 | - |
| **636**810 | Rp 1 1/2″F | DN 40 | 22 | 1 | - |
| **636**910 | Rp 2″F | DN 50 | 28 | 1 | - |

**Application diagram of threaded three-way regulating valve**

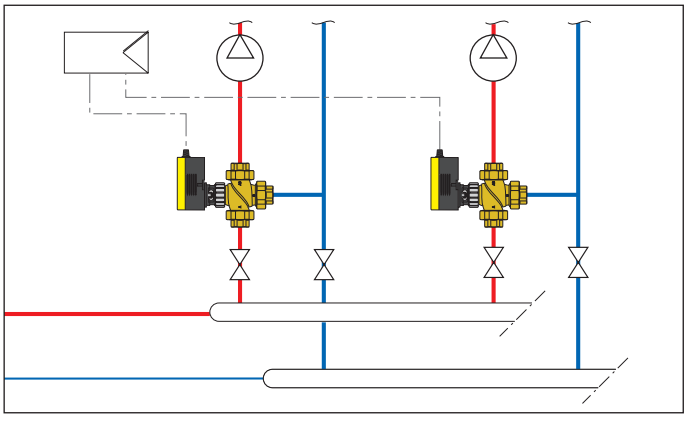

## Linear actuator for regulating brass valves



### 636

Proportional actuator for threaded regulating valves 636 series, nominal force 250 N.

Ambient temperature range: -10–55 °C
Protection class: IP 54
Control signal: 0–10 V, 2 point, 3 point
Feedback signal: 0–10 V
Operating time: 120 s

| Code | Notes | Electric supply | | |
|---|---|---|---|---|
| **636**004 | nominal force 250N | 24 V AC | 1 | - |



### 636

Actuator for threaded regulating valves 636 series, nominal force 500 N.

Ambient temperature range: -10–55 °C
Protection class: IP 54
Control signal: 2 point, 3 point
Operating time: 120 s

| Code | Notes | Electric supply | | |
|---|---|---|---|---|
| **636**002 | nominal force 500 N | 230 V AC | 1 | - |



### 636

Proportional actuator for threaded regulating valves 636 series, nominal force 500 N.

Ambient temperature range: -10–55 °C
Protection class: IP 54
Control signal: 0–10 V, 2 point, 3 point
Operating time: 60, 120 s
Feedback signal: 0–10 V

| Code | Notes | Electric supply | | |
|---|---|---|---|---|
| **636**014 | nominal force 500 N | 24 V AC | 1 | - |

**Max. Δp table: actuator + threaded valve body 636 series**

| Code body valve | Actuator code 636004 | Actuator code 636002 | Actuator code 636014 |
|---|---|---|---|
| **636**4.0 | 4 bar | 6 bar | 6 bar |
| **636**5.0 | 4 bar | 5 bar | 5 bar |
| **636**6.0 | 4 bar | 4 bar | 4 bar |
| **636**7.0 | 3 bar | 3,5 bar | 3,5 bar |
| **636**8.0 | 1,9 bar | 3 bar | 3 bar |
| **636**9.0 | 1 bar | 2,4 bar | 2,4 bar |

## Cast iron regulating valve



### 636

**Two/three-way** regulating globe valve with flanged connection.
Coupling with counterflange EN 1092-1.
Equal percentage regulation (two-way).
Equal percentage/linear regulation (three-way).

Maximum working pressure: 16 bar
Medium temperature range: 0–100 °C
Nominal pressure: PN 16
Material: cast iron

| Code | Connection | Kv ($m^3/h$) | | |
|---|---|---|---|---|
| **636**060 | DN 65 - PN 16 | 63 | 1 | - |
| **636**080 | DN 80 - PN 16 | 100 | 1 | - |
| **636**100 | DN 100 - PN 16 | 160 | 1 | - |
| **636**120 | DN 125 - PN 16 | 220 | 1 | - |
| **636**150 | DN 150 - PN 16 | 320 | 1 | - |

The valve can be transformed into a three-way valve by opening the central third port.

**Application diagram of flanged two-way regulating valve**

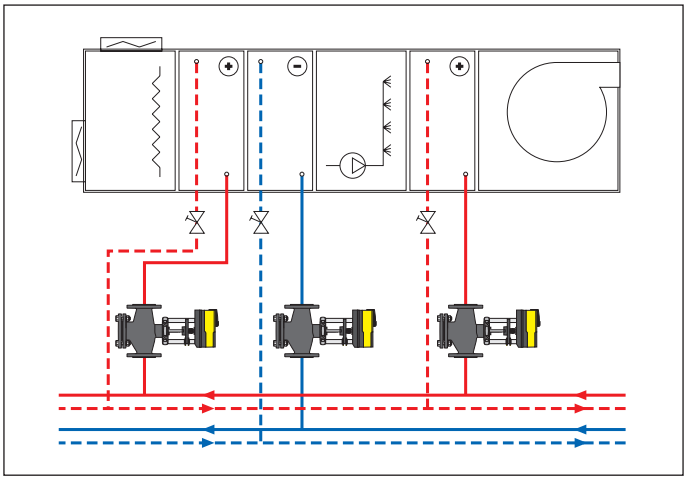

**Application diagram of flanged three-way regulating valve**

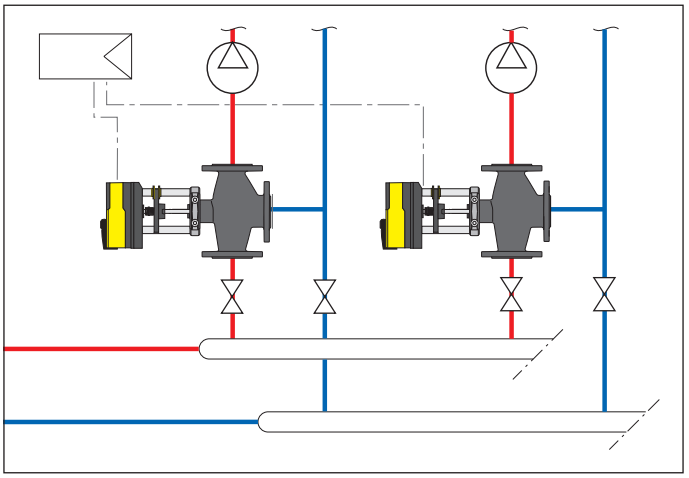

## Linear actuator for regulating cast iron valves



### 636

Actuator for flanged regulating valves 636060 and 636080.

Ambient temperature range: -10–55 °C
Protection class: IP 54
Control signal: 4–20 mA, 2 point, 3 point, 0–10 V
Feedback signal: 0–10 V
Operating time: 80, 120 s

CE

| Code | Notes | Electric supply | | |
|---|---|---|---|---|
| **636**024 | nominal force 1000N | 24 V AC | 1 | - |



### 636

Actuator for flanged regulating valves 636 series.
Operating time:
40 s/80 s/120 s DN 65-DN 80;
80 s/160 s/240s DN 100-DN150.

Ambient temperature range: -10–55 °C
Protection class: IP 66
Control signal: 4–20 mA, 2 point, 3 point, 0–10 V
Feedback signal: 0–10 V

CE

| Code | Notes | Electric supply | | |
|---|---|---|---|---|
| **636**034 | nominal force 2500 N | 24 V AC | 1 | - |

**Max. Δp table: actuator + flanged valve body 636 series**

| Code body valve | Actuator code 636024 | Actuator code 636034 |
|---|---|---|
| **636**060 | 2,5 bar | 3 bar |
| **636**080 | 1,5 bar | 3 bar |
| **636**100 | - | 2 bar |
| **636**125 | - | 1,5 bar |
| **636**150 | - | 1 bar |

# REGULATING MIXING VALVES

## Cast iron mixing regulation valves



### 610

Three-way butterfly mixing valve, threaded connections.
**Factory configuration: boiler inlet on the RH connection**.

Maximum working pressure: 6 bar
Medium temperature range: 2–110 °C

| Code | Connection | Kv ($m^3/h$) | | |
|---|---|---|---|---|
| **610**005 | 3/4″F | 7,5 | 1 | - |
| **610**006 | 1″F | 11,9 | 1 | - |
| **610**007 | 1 1/4″F | 16,8 | 1 | - |
| **610**008 | 1 1/2″F | 30 | 1 | - |
| **610**009 | 2″F | 45 | 1 | - |
| **610**020 | 2 1/2″F | 72 | 1 | - |



### 611

Four-way butterfly mixing valve, threaded connections.
**Factory configuration: boiler inlet on the RH connection**.

Maximum working pressure: 6 bar
Medium temperature range: 2–110 °C

| Code | Connection | Kv ($m^3/h$) | | |
|---|---|---|---|---|
| **611**005 | 3/4″F | 7,8 | 1 | - |
| **611**006 | 1″F | 12,3 | 1 | - |
| **611**007 | 1 1/4″F | 18,5 | 1 | - |
| **611**008 | 1 1/2″F | 30 | 1 | - |
| **611**009 | 2″F | 53 | 1 | - |
| **611**020 | 2 1/2″F | 80 | 1 | - |



### 610

Three-way butterfly mixing valve, flanged connections.
To be coupled with flat counterflanges EN 1092-1.
**Factory configuration: boiler inlet on the RH connection**.

Maximum working pressure: 6 bar
Medium temperature range: 2–110 °C
Nominal pressure: PN 6

| Code | Connection | Kv ($m^3/h$) | | |
|---|---|---|---|---|
| **610**050 | DN 50 - PN 6 | 45 | 1 | - |
| **610**060 | DN 65 - PN 6 | 72 | 1 | - |
| **610**080 | DN 80 - PN 6 | 140 | 1 | - |
| **610**100 | DN 100 - PN 6 | 183 | 1 | - |
| **610**120 | DN 125 - PN 6 | 340 | 1 | - |



### 611

Four-way butterfly mixing valve, flanged connections.
To be coupled with flat counterflanges EN 1092-1.
**Factory configuration: boiler inlet on the RH connection**.

Maximum working pressure: 6 bar
Medium temperature range: 2–110 °C
Nominal pressure: PN 6

| Code | Connection | Kv ($m^3/h$) | | |
|---|---|---|---|---|
| **611**050 | DN 50 - PN 6 | 53 | 1 | - |
| **611**060 | DN 65 - PN 6 | 80 | 1 | - |
| **611**080 | DN 80 - PN 6 | 140 | 1 | - |
| **611**100 | DN 100 - PN 6 | 230 | 1 | - |
| **611**120 | DN 125 - PN 6 | 410 | 1 | - |

**Mixing valve - actuator coupling table**

| | GENERATOR INLET | VALVE OPENING | ACTUATOR |
|---|---|---|---|
| **Three-way butterfly 610 series, 3/4" - 1 1/2"** | **Right** | **Counter clockwise rotation** | **638032** |
| | **Left** | **Clockwise rotation** | **638002** |
| **Three-way butterfly 610 series, 2" - 2 1/2" DN 50 - DN 125** | **Right** | **Counter clockwise rotation** | **638022** |
| | **Left** | **Clockwise rotation** | **638022** |
| **Four-way butterfly 611 series, 3/4" - 1 1/2"** | **Right** | **Counter clockwise rotation** | **638032** |
| | **Left** | **Clockwise rotation** | **638002** |
| **Four-way butterfly 611 series, 2" - 2 1/2" DN 50 - DN 125** | **Right** | **Counter clockwise rotation** | **638022** |
| | **Left** | **Clockwise rotation** | **638022** |
| **612 series sector, 3/4" - 1 1/2"** | **Right** | **Clockwise rotation** | **638002** |
| | **Left** | **Counter clockwise rotation** | **638032** |
| **612 series sector, 2" - 2 1/2" DN 50 - DN 125** | **Right** | **Clockwise rotation** | **638022** |
| | **Left** | **Counter clockwise rotation** | **638022** |



## 612

Three-way sector mixing valve, threaded connections.
**Factory configuration: boiler inlet on the RH connection**.

Maximum working pressure: 6 bar
Medium temperature range: 2–110 °C

| Code | Connection | Kv ($m^3/h$) | | |
|---|---|---|---|---|
| **612**005 | 3/4" F | 7,2 | 1 | - |
| **612**006 | 1" F | 11,9 | 1 | - |
| **612**007 | 1 1/4" F | 16,5 | 1 | - |
| **612**008 | 1 1/2" F | 30 | 1 | - |
| **612**009 | 2" F | 42 | 1 | - |
| **612**020 | 2 1/2" F | 62 | 1 | - |



## 612

Three-way sector mixing valve, threaded connections.
**Factory configuration: boiler inlet on the LH connection.**

Maximum working pressure: 6 bar
Medium temperature range: 2–110 °C

| Code | Connection | Kv ($m^3/h$) | | |
|---|---|---|---|---|
| **612**035 | 3/4" F | 7,2 | 1 | - |
| **612**036 | 1" F | 11,9 | 1 | - |
| **612**037 | 1 1/4" F | 16,5 | 1 | - |
| **612**038 | 1 1/2" F | 30 | 1 | - |
| **612**039 | 2" F | 42 | 1 | - |
| **612**031 | 2 1/2" F | 62 | 1 | - |



## 612

Three-way sector mixing valve.
To be coupled with flat counterflanges EN 1092-1.
**Factory configuration: boiler inlet on the RH connection.**

Maximum working pressure: 6 bar
Medium temperature range: 2–110 °C
Nominal pressure: PN 6

| Code | Connection | Kv ($m^3/h$) | | |
|---|---|---|---|---|
| **612**050 | DN 50 - PN 6 | 42 | 1 | - |
| **612**060 | DN 65 - PN 6 | 62 | 1 | - |
| **612**080 | DN 80 - PN 6 | 123 | 1 | - |
| **612**100 | DN 100 - PN 6 | 172 | 1 | - |
| **612**120 | DN 125 - PN 6 | 340 | 1 | - |

# Actuators



## 638

Actuator for mixing valves from 3/4" to 1 1/2".
Complete with adapter.
**With auxiliary microswitch**.

Auxiliary microswitch contact rating (230 V): 6 (2) A
Protection class: IP 65

CE

| Code | Electric supply | Operating time (s) | Rotation | | |
|---|---|---|---|---|---|
| **638**002 | 230 V AC | 50 | 90° | 1 | 5 |



## 638

Actuator for mixing valves from 3/4" to 1 1/2".
Complete with adapter.
**With auxiliary microswitch**.

Auxiliary microswitch contact rating (230 V): 6 (2) A
Protection class: IP 65

CE

| Code | Electric supply | Operating time (s) | Rotation | | |
|---|---|---|---|---|---|
| **638**032 | 230 V AC | 50 | 90° | 1 | 5 |



## 638

Actuator for mixing valves from 2" to 5".
Complete with adapter.
**With double auxiliary microswitch**.

Auxiliary microswitch contact rating (230 V): 6 (2) A
Protection class: IP 65

CE

| Code | Electric supply | Operating time (s) | Rotation | | |
|---|---|---|---|---|---|
| **638**022 | 230 V AC | 60 | 90° | 1 | 5 |

To replace code 637012, contact Caleffi technical support in advance

## Brass mixing regulation valves



### 610

Three-way sector mixing valve, threaded connections.
**Factory configuration: boiler inlet on the RH connection.**

Maximum working pressure: 10 bar
Medium temperature range: 5–110 °C
△p max.: 1 bar
Material: brass

| Code | Connection | Kv ($m^3/h$) | | |
|---|---|---|---|---|
| **610**400 | Rp 1/2″F | 4 | 1 | - |
| **610**500 | Rp 3/4″F | 6,3 | 1 | - |
| **610**600 | Rp 1″F | 10 | 1 | - |
| **610**700 | Rp 1 1/4″F | 15 | 1 | - |
| **610**800 | Rp 1 1/2″F | 25 | 1 | - |
| **610**900 | Rp 2″F | 40 | 1 | - |

**Mixing valve function***

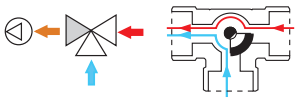

**Diverter valve function***

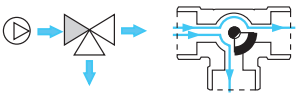

*Leakage (Δp 1 bar ≤ 0,5 % Kv EN 12226-1)

**Legend:**
Boiler flow
System flow
System return

**Mixing valve function**

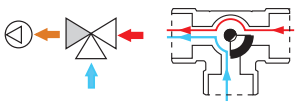

**Mixing valve function**

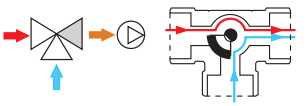

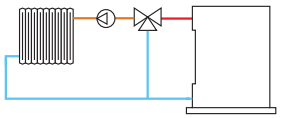

**Boiler inlet configuration on the RH side (from factory)**

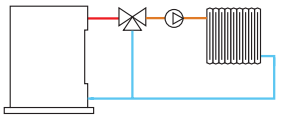

**Boiler inlet configuration on the LH side**



### 6370

Actuator for sector mixing valve, **three-point control**.
For mixing valves codes 61000 from 1/2″ to 2″ and for unit 167 series.
Actuator torque 5 N·m.

Ambient temperature range: 0–55 °C
Protection class: IP 44
Supply cable length: 1,5 m

CE

| Code | Electric supply | Operating time (s) | Rotation | | |
|---|---|---|---|---|---|
| **6370**42 | 230 V AC | 150 | 90° | 1 | - |

**Wiring diagram**

**Actuator**

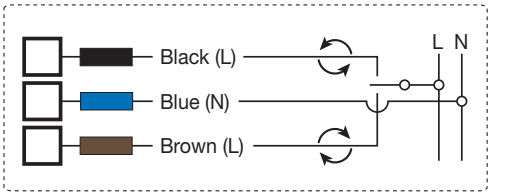




### 6370

Actuator for sector mixing valve, **proportional control**.
For mixing valves codes 61000 from 1/2″ to 2″ and for unit 167 series.
Actuator torque 5 N·m.

Ambient temperature range: 0–55 °C
Protection class: IP 44
Supply cable length: 1,5 m
Control signal: 0 (2)–10 V. 0 (4)–20 mA. 0–5 V. 5–10 V
Rotation: 90°

CE

| Code | Electric supply | Operating time (s) | Rotation | | |
|---|---|---|---|---|---|
| **6370**44 | 24 V AC | 75 | 90° | 1 | - |

**Wiring diagram**

**Actuator**

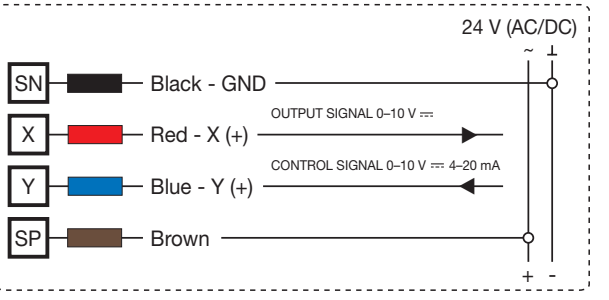

## Regulators



### 161

Digital regulator with synoptic diagram **for heating and cooling**.
Complete with immersion flow probes with pocket and Pt1000 Ø 6 mm return probe (pocket to be chosen according to the pipe, see accessories).
Optional climatic probe.

Adjustment temperature range: 5–95 °C
Electric supply: 230 V AC
Protection class: IP 20
Probe/cable length: 1,5 m
Control signal: 3 point, 0–10 V

| Code | | | |
|---|---|---|---|
| **161**010 | | 1 | - |



### 1520

Digital temperature controller for heating and cooling.
Complete with flow probe, outside probe and max. relative humidity probe.

Electric supply: 230 V AC
Running power consumption: 5,5 VA
Protection class: IP 40
Control signal: 3 point

| Code | Notes | | |
|---|---|---|---|
| **1520**21 | 1 channel | 1 | - |



### 1520

Outside compensated digital temperature regulator, **only for heating**.
Complete with contact flow probe and outside probe.

Adjustment temperature range: 20–90 °C
Electric supply: 230 V AC
Protection class: IP 40
Control signal: 3 point

| Code | Notes | | |
|---|---|---|---|
| **1520**01 | 1 channel | 1 | - |
| **1520**02 | 2 channels | 1 | - |
| **1520**03 | 3 channels | 1 | - |



### 161

Outside temperature probe.

| Code | | | |
|---|---|---|---|
| **161**002 | | 1 | - |



### 161

Pressure safety switch.
Complete with cable for wiring.

Medium temperature range: 5–100 °C
Supply cable length: 1 m
Adjustment pressure range: 0,5–10 bar

| Code | | | |
|---|---|---|---|
| **161**003 | | 1 | - |



### 161

Dew point detector.

Working range (humidity) UR: 30–100 %

| Code | | | |
|---|---|---|---|
| **161**004 | | 1 | - |



### 161

Remote regulator.
Functions:
- translation of the setting curves, from +15 K to -15 K;
- maximum temperature;
- position OFF.

| Code | | | |
|---|---|---|---|
| **161**005 | | 1 | - |



### 161

Pt1000 probe, Ø6 mm.

| Code | Notes | Article use | | |
|---|---|---|---|---|
| **161**006 | L 45 mm, L cable 2,5 m | 161010 | 1 | - |
| **161**015 | L 20 mm, L cable 1,5 m | 161010 | 1 | - |



### 161

Pt1000 contact probe for pipes, Ø 6 mm.

| Code | Notes | Article use | | |
|---|---|---|---|---|
| **161**012 | L cable 2,5 m | 161010 | 1 | - |



### 161

Pt1000 probe pocket, size 1/2" M.

| Code | Notes | Article use | | |
|---|---|---|---|---|
| **161**013 | L 60 mm | 161010 | 1 | - |
| **161**014 | L 100 mm | 161010, 150006, 257006 | 1 | - |

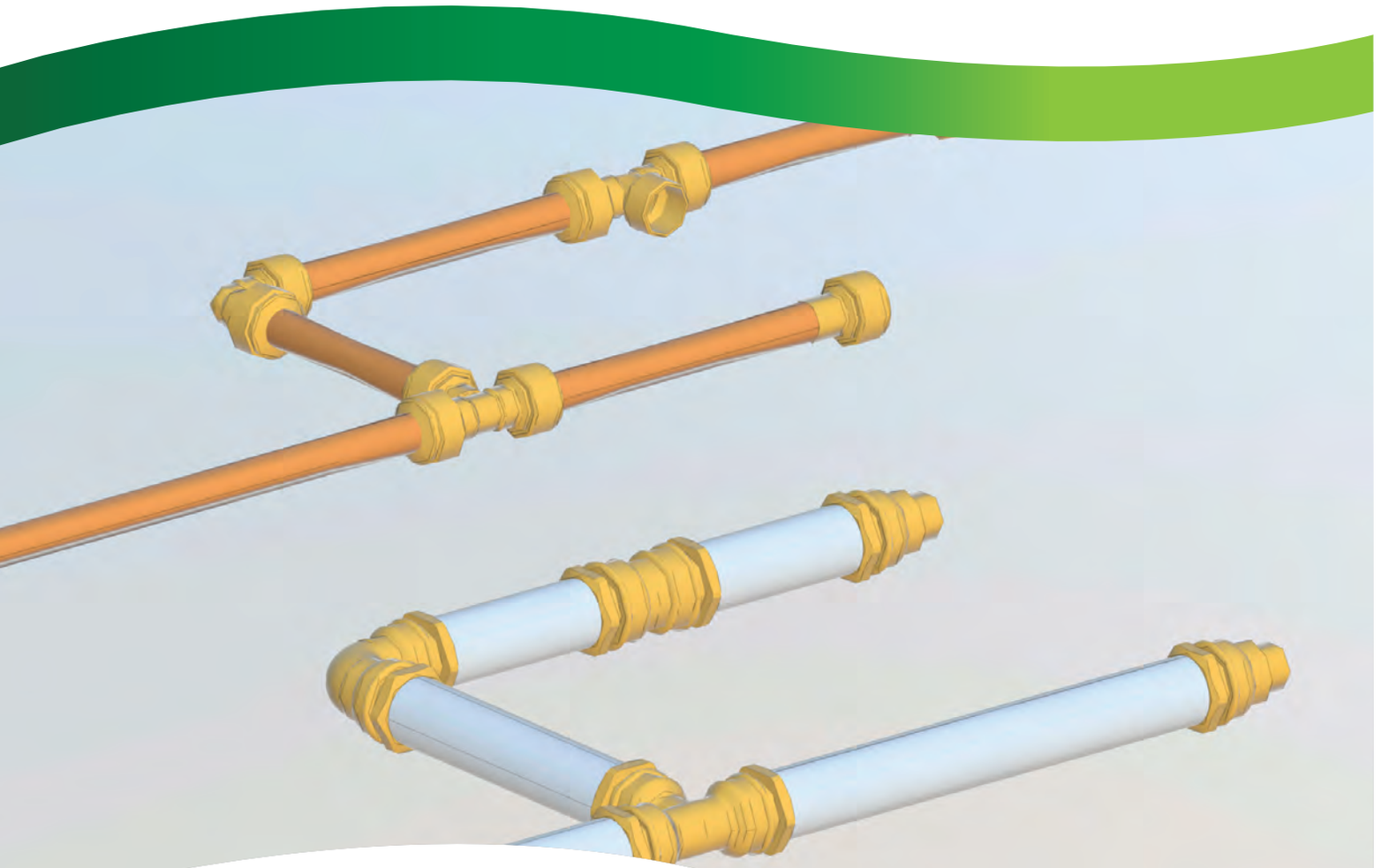

*Diagrams made with BIM families:* ***bim.caleffi.com***



## Fittings for pipe connections

# FITTINGS FOR PIPE CONNECTIONS

## for gas and hydrocarbons - EN 549 standard

## for hydraulic and domestic water systems - EN 681.1 standard

Fittings highlighted in yellow are supplied with two O-Rings:
yellow to be used for gas and fluid hydrocarbons - black to be used for hydraulic systems.

To be used for gas systems with power output up to 35 kW, according to UNI 7129-2015 standard only.

## Three-piece fittings



### 588

Three-piece union fitting.
**For gas and fluid hydrocarbons**: yellow O-Ring according to EN 549 standard.
Temperature range: -20–100 °C.
**For hydraulic and domestic water systems**: black O-Ring according to EN 681.1 standard.

Maximum working pressure: 16 bar
Medium temperature range: -25–120 °C

| Code | Connection 1 | Connection 2 | | |
|---|---|---|---|---|
| **588**030 | 3/8″ F | 3/8″ M | 1 | 50 |
| **588**040 | 1/2″ F | 1/2″ M | 1 | 50 |
| **588**050 | 3/4″ F | 3/4″ M | 1 | 25 |
| **588**060 | 1″ F | 1″ M | 1 | 20 |
| **588**070 | 1 1/4″ F | 1 1/4″ M | 1 | 10 |
| **588**080 | 1 1/2″ F | 1 1/2″ M | 1 | - |
| **588**090 | 2″ F | 2″ M | 1 | - |



### 588

Three-piece union fitting.
For hydraulic and domestic water systems (Black O-Ring conforms to standard EN 681.1).

Maximum working pressure: 16 bar
Medium temperature range: -25–120 °C

| Code | Connection 1 | Connection 2 | | |
|---|---|---|---|---|
| **588**031 | 3/8″ F | 3/8″ M | 1 | 50 |
| **588**041 | 1/2″ F | 1/2″ M | 1 | 50 |
| **588**051 | 3/4″ F | 3/4″ M | 1 | 25 |
| **588**061 | 1″ F | 1″ M | 1 | 20 |
| **588**071 | 1 1/4″ F | 1 1/4″ M | 1 | 10 |
| **588**081 | 1 1/2″ F | 1 1/2″ M | 1 | - |
| **588**091 | 2″ F | 2″ M | 1 | - |



### 5881

Three-piece elbow union fitting.
**For gas and fluid hydrocarbons**: yellow O-Ring according to EN 549 standard.
Temperature range: -20–100 °C.
**For hydraulic and domestic water systems**: black O-Ring according to EN 681.1 standard.

Maximum working pressure: 16 bar
Medium temperature range: -25–120 °C

| Code | Connection 1 | Connection 2 | | |
|---|---|---|---|---|
| **588**130 | 3/8″ F | 3/8″ M | 1 | 50 |
| **588**140 | 1/2″ F | 1/2″ M | 1 | 25 |
| **588**150 | 3/4″ F | 3/4″ M | 1 | 25 |
| **588**160 | 1″ F | 1″ M | 1 | 15 |
| **588**170 | 1 1/4″ F | 1 1/4″ M | 1 | 10 |



### 5881

Three-piece elbow union fitting.
For hydraulic and domestic water systems (Black O-Ring conforms to standard EN 681.1).

Maximum working pressure: 16 bar
Medium temperature range: -25–120 °C

| Code | Connection 1 | Connection 2 | | |
|---|---|---|---|---|
| **588**131 | 3/8″ F | 3/8″ M | 1 | 50 |
| **588**141 | 1/2″ F | 1/2″ M | 1 | 25 |
| **588**151 | 3/4″ F | 3/4″ M | 1 | 25 |
| **588**161 | 1″ F | 1″ M | 1 | 15 |
| **588**171 | 1 1/4″ F | 1 1/4″ M | 1 | 10 |

## Unions



Flat seat union with gasket.

| Code | Connection 1 | Connection 2 | | |
|---|---|---|---|---|
| R59787 | 3/4″ F | 1/2″ M | 1 | - |
| R59788 | 1″ F | 3/4″ M | 1 | - |
| R59789 | 1 1/4″ F | 1″ M | 1 | - |
| R59485 | 1 1/2″ F | 1 1/4″ M | 1 | - |
| R59581 | 2″ F | 1 1/2″ M | 1 | - |
| R59487 | 2 1/2″ F | 2″ M | 1 | - |

## Fittings for PE-X pipes



### 930

Male elbow fitting with wall connection.
Compatible with fittings 347, 438 and 680 series for water installation.

| Code | Connection 1 | Connection 2 | | |
|---|---|---|---|---|
| **930**418 | 1/2" F | 23 p.1,5 M | 5 | - |



### 940

Male fitting.
Can be coupled with 680 and 679 series fittings.

| Code | Connection 1 | Connection 2 | | |
|---|---|---|---|---|
| **940**300 | 3/8" M | 23 p. 1,5 | 1 | 50 |
| **940**400 | 1/2" M | 23 p. 1,5 | 1 | 50 |
| **940**450 | 1/2" M | 3/4" M | 1 | 50 |
| **940**500 | 3/4" M | 23 p. 1,5 | 1 | 50 |



### 941

Female fitting.
Can be coupled with 680 and 679 series fittings.

| Code | Connection 1 | Connection 2 | | |
|---|---|---|---|---|
| **941**300 | 3/8" F | 23 p. 1,5 | 1 | 50 |
| **941**400 | 1/2" F | 23 p. 1,5 | 1 | 50 |
| **941**450 | 1/2" F | 3/4" M | 1 | 50 |
| **941**500 | 3/4" F | 23 p. 1,5 | 1 | 50 |
| **941**550 | 3/4" F | 3/4" M | 1 | 50 |
| **941**560 | 3/4" F | 1" M | 1 | 50 |



### 942

Sleeve.
Can be coupled with 680 and 679 series fittings.

| Code | Connection 1 | Connection 2 | | |
|---|---|---|---|---|
| **942**000 | 23 p. 1,5 | 23 p. 1,5 | 1 | 50 |
| **942**550 | 3/4" M | 3/4" M | 1 | 50 |
| **942**560 | 3/4" M | 1" M | 1 | 50 |



### 943

Elbow fitting.
Can be coupled with 680 and 679 series fittings.

| Code | Connection 1 | Connection 2 | | |
|---|---|---|---|---|
| **943**000 | 23 p. 1,5 | 23 p. 1,5 | 1 | 50 |
| **943**550 | 3/4" M | 3/4" M | 1 | 50 |



### 944

Male elbow fitting.
Can be coupled with 680 and 679 series fittings.

| Code | Connection 1 | Connection 2 | | |
|---|---|---|---|---|
| **944**400 | 1/2" M | 23 p. 1,5 | 1 | 50 |



### 945

Female elbow fitting.
Can be coupled with 680 and 679 series fittings.

| Code | Connection 1 | Connection 2 | | |
|---|---|---|---|---|
| **945**400 | 1/2" F | 23 p. 1,5 | 1 | 50 |
| **945**550 | 3/4" F | 3/4" M | 1 | 50 |



### 946

Tee piece.
Can be coupled with 680 and 679 series fittings.

| Code | Connection | Connection 1 | Connection 2 | | |
|---|---|---|---|---|---|
| **946**000 | 23 p. 1,5 | 23 p. 1,5 | 23 p. 1,5 | 1 | 50 |
| **946**500 | 3/4" M | 3/4" M | 3/4" M | 1 | 25 |



### 947

Side male tee piece.
Can be coupled with 680 and 679 series fittings.

| Code | Connection | Connection 1 | Connection 2 | | |
|---|---|---|---|---|---|
| **947**400 | 23 p. 1,5 | 23 p. 1,5 | 1/2" M | 1 | 50 |
| **947**500 | 3/4" M | 3/4" M | 3/4" M | 1 | - |



### 948

Central male tee piece.
Can be coupled with 680 and 679 series fittings.

| Code | Connection | Connection 1 | Connection 2 | | |
|---|---|---|---|---|---|
| **948**400 | 23 p. 1,5 | 1/2" M | 23 p. 1,5 | 1 | 50 |

## Compression fittings with O-ring seal



### 900

Female fitting.
For annealed copper, hard copper, brass, mild steel and stainless steel pipes.
With double O-Ring.
Conforms to standard UNI EN 1254-4.
**For gas and fluid hydrocarbon systems** (yellow O-ring conforms to standard EN 549).
**For hydraulic and domestic water systems** (Black o-ring conforms to standard EN 681.1).
Note (*): to be used only with water and non-dangerous glycol solutions.

Maximum working pressure: 16 bar
Medium temperature range: -25–120 °C

| Code | Connection | Pipe connection | Notes | | |
|---|---|---|---|---|---|
| **900**308 | 3/8" F | Ø 8 | - | 1 | 50 |
| **900**310 | 3/8" F | Ø 10 | - | 1 | 50 |
| **900**312 | 3/8" F | Ø 12 | - | 1 | 50 |
| **900**314 | 3/8" F | Ø 14 | - | 1 | 50 |
| **900**410 | 1/2" F | Ø 10 | - | 1 | 50 |
| **900**412 | 1/2" F | Ø 12 | - | 1 | 50 |
| **900**414 | 1/2" F | Ø 14 | - | 1 | 50 |
| **900**415 | 1/2" F | Ø 15 | - | 1 | 50 |
| **900**416 | 1/2" F | Ø 16 | - | 1 | 50 |
| **900**418 | 1/2" F | Ø 18 | - | 1 | 25 |
| **900**516 | 3/4" F | Ø 16 | - | 1 | 50 |
| **900**518 | 3/4" F | Ø 18 | - | 1 | 25 |
| **900**522 | 3/4" F | Ø 22 | - | 1 | 25 |
| **900**622 | 1" F | Ø 22 | - | 1 | 25 |
| **900**628 | 1" F | Ø 28 | (*) | 1 | 25 |



### 903

Coupling sleeve.
For annealed copper, hard copper, brass, mild steel and stainless steel pipes.
Conforms to standard UNI EN 1254-2.
**For hydraulic and domestic water systems**: black o-ring conforms to standard EN 681.1.

Maximum working pressure: 16 bar
Medium temperature range: -25–120 °C

| Code | Pipe diameter | | |
|---|---|---|---|
| **903**008 | Ø 8 | 1 | 50 |
| **903**010 | Ø 10 | 1 | 50 |
| **903**012 | Ø 12 | 1 | 50 |
| **903**014 | Ø 14 | 1 | 50 |
| **903**015 | Ø 15 | 1 | 50 |
| **903**016 | Ø 16 | 1 | 50 |
| **903**018 | Ø 18 | 1 | 25 |
| **903**022 | Ø 22 | 1 | 25 |

**O-Ring seal**
The hydraulic tightness between the two fitting components is a tapered type with O-Ring.
This allows to screw the fitting up smoothly with a full safety warranty.

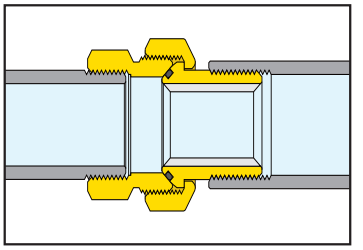



### 904

Male fitting.
For annealed copper, hard copper, brass, mild steel and stainless steel pipes.
With double O-Ring.
Conforms to standard UNI EN 1254-4.
**For gas and fluid hydrocarbon systems** (yellow O-ring conforms to standard EN 549).
**For hydraulic and domestic water systems** (Black o-ring conforms to standard EN 681.1).
Note (*): to be used only with water and non-dangerous glycol solutions.

Maximum working pressure: 16 bar
Medium temperature range: -25–120 °C

| Code | Connection | Pipe diameter | Notes | | |
|---|---|---|---|---|---|
| **904**308 | 3/8" M | Ø 8 | - | 1 | 50 |
| **904**310 | 3/8" M | Ø 10 | - | 1 | 50 |
| **904**312 | 3/8" M | Ø 12 | - | 1 | 50 |
| **904**314 | 3/8" M | Ø 14 | - | 1 | 50 |
| **904**410 | 1/2" M | Ø 10 | - | 1 | 50 |
| **904**412 | 1/2" M | Ø 12 | - | 1 | 50 |
| **904**414 | 1/2" M | Ø 14 | - | 1 | 50 |
| **904**415 | 1/2" M | Ø 15 | - | 1 | 50 |
| **904**416 | 1/2" M | Ø 16 | - | 1 | 50 |
| **904**418 | 1/2" M | Ø 18 | - | 1 | 25 |
| **904**514 | 3/4" M | Ø 14 | - | 1 | 50 |
| **904**516 | 3/4" M | Ø 16 | - | 1 | 50 |
| **904**518 | 3/4" M | Ø 18 | - | 1 | 25 |
| **904**522 | 3/4" M | Ø 22 | - | 1 | 25 |
| **904**618 | 1" M | Ø 18 | - | 1 | 25 |
| **904**622 | 1" M | Ø 22 | - | 1 | 25 |
| **904**628 | 1" M | Ø 28 | (*) | 1 | 10 |



### 9050

Elbow fitting.
For annealed copper, hard copper, brass, mild steel and stainless steel pipes.
Conforms to standard UNI EN 1254-4.
**For hydraulic and domestic water systems**: black O-Ring conforms to standard EN 681.1.

Maximum working pressure: 16 bar
Medium temperature range: -25–120 °C

| Code | Pipe diameter | | |
|---|---|---|---|
| **9050**10 | Ø 10 | 1 | 25 |
| **9050**12 | Ø 12 | 1 | 25 |
| **9050**14 | Ø 14 | 1 | 25 |
| **9050**15 | Ø 15 | 1 | 25 |
| **9050**16 | Ø 16 | 1 | 25 |
| **9050**18 | Ø 18 | 1 | 25 |
| **9050**22 | Ø 22 | 1 | 25 |



## 9057

Male elbow fitting.
For annealed copper, hard copper, brass, mild steel and stainless steel pipes.
With double O-ring.
Conforms to standard UNI EN 1254-4.
**For gas and fluid hydrocarbon systems** (yellow O-ring conforms to standard EN 549).
**For hydraulic and domestic water systems** (black O-ring conforms to standard EN 681.1).

Maximum working pressure: 16 bar
Medium temperature range: -25–120 °C

| Code | Connection | Pipe diameter | | |
|---|---|---|---|---|
| **905730** | 3/8" M | Ø 10 | 1 | 25 |
| **905732** | 3/8" M | Ø 12 | 1 | 25 |
| **905740** | 1/2" M | Ø 10 | 1 | 25 |
| **905742** | 1/2" M | Ø 12 | 1 | 25 |
| **905744** | 1/2" M | Ø 14 | 1 | 25 |
| **905745** | 1/2" M | Ø 15 | 1 | 25 |
| **905746** | 1/2" M | Ø 16 | 1 | 25 |
| **905748** | 1/2" M | Ø 18 | 1 | 25 |
| **905756** | 3/4" M | Ø 16 | 1 | 25 |
| **905758** | 3/4" M | Ø 18 | 1 | 25 |
| **905752** | 3/4" M | Ø 22 | 1 | 25 |



## 9058

Female elbow fitting.
For annealed copper, hard copper, brass, mild steel and stainless steel pipes.
With double O-ring.
Conforms to standard UNI EN 1254-4.
**For gas and fluid hydrocarbon systems** (yellow O-ring conforms to standard EN 549).
**For hydraulic and domestic water systems** (black O-ring conforms to standard EN 681.1).

Maximum working pressure: 16 bar
Medium temperature range: -25–120 °C

| Code | Connection | Pipe diameter | | |
|---|---|---|---|---|
| **905830** | 3/8" F | Ø 10 | 1 | 25 |
| **905832** | 3/8" F | Ø 12 | 1 | 25 |
| **905840** | 1/2" F | Ø 10 | 1 | 25 |
| **905842** | 1/2" F | Ø 12 | 1 | 25 |
| **905844** | 1/2" F | Ø 14 | 1 | 25 |
| **905845** | 1/2" F | Ø 15 | 1 | 25 |
| **905846** | 1/2" F | Ø 16 | 1 | 25 |
| **905848** | 1/2" F | Ø 18 | 1 | 25 |
| **905856** | 3/4" F | Ø 16 | 1 | 25 |
| **905858** | 3/4" F | Ø 18 | 1 | 25 |
| **905852** | 3/4" F | Ø 22 | 1 | 25 |



## 9060

Tee fitting.
For annealed copper, hard copper, brass, mild steel and stainless steel pipes.
Conforms to standard UNI EN 1254-4.
**For hydraulic and domestic water systems** (Black O-ring conforms to standard EN 681.1).

Maximum working pressure: 16 bar
Medium temperature range: -25–120 °C

| Code | Pipe diameter | | |
|---|---|---|---|
| **906010** | Ø 10 | 1 | 25 |
| **906012** | Ø 12 | 1 | 25 |
| **906014** | Ø 14 | 1 | 25 |
| **906015** | Ø 15 | 1 | 25 |
| **906016** | Ø 16 | 1 | 25 |
| **906018** | Ø 18 | 1 | 25 |
| **906022** | Ø 22 | 1 | 20 |



## 9067

Male tee fitting.
For annealed copper, hard copper, brass, mild steel and stainless steel pipes.
Conforms to standard UNI EN 1254-4.
**For hydraulic and domestic water systems**.
(Black O-ring conforms to standard EN 681.1).

Maximum working pressure: 16 bar
Medium temperature range: -25–120 °C

| Code | Connection | Pipe diameter | | |
|---|---|---|---|---|
| **906740** | 1/2" M | Ø 10 | 1 | 25 |
| **906742** | 1/2" M | Ø 12 | 1 | 25 |
| **906744** | 1/2" M | Ø 14 | 1 | 25 |
| **906745** | 1/2" M | Ø 15 | 1 | 25 |
| **906746** | 1/2" M | Ø 16 | 1 | 25 |
| **906758** | 3/4" M | Ø 18 | 1 | 25 |
| **906752** | 3/4" M | Ø 22 | 1 | 20 |



## 9068

Female tee fitting.
For annealed copper, hard copper, brass, mild steel and stainless steel pipes.
Conforms to standard UNI EN 1254-4.
**For hydraulic and domestic water systems**.
(black O-ring conforms to standard EN 681.1).

Maximum working pressure: 16 bar
Medium temperature range: -25–120 °C

| Code | Connection | Pipe diameter | | |
|---|---|---|---|---|
| **9068**30 | 3/8" F | Ø 10 | 1 | 25 |
| **9068**32 | 3/8" F | Ø 12 | 1 | 25 |
| **9068**40 | 1/2" F | Ø 10 | 1 | 25 |
| **9068**42 | 1/2" F | Ø 12 | 1 | 25 |
| **9068**44 | 1/2" F | Ø 14 | 1 | 25 |
| **9068**45 | 1/2" F | Ø 15 | 1 | 25 |
| **9068**46 | 1/2" F | Ø 16 | 1 | 25 |
| **9068**58 | 3/4" F | Ø 18 | 1 | 25 |
| **9068**52 | 3/4" F | Ø 22 | 1 | 20 |



## 930

Elbow fitting with wall connection.
For annealed copper, hard copper, brass, mild steel and stainless steel pipes.
With double O-Ring.
Conforms to standard UNI EN 1254-4.
**For gas and fluid hydrocarbon systems**
(yellow O-Ring conforms to standard EN 549).
**For hydraulic and domestic water systems**
(black O-ring conforms to standard EN 681.1).

Maximum working pressure: 16 bar
Medium temperature range: -25–120 °C

| Code | Connection | Pipe diameter | | |
|---|---|---|---|---|
| **930**412 | 1/2" F | Ø 12 | 1 | 25 |
| **930**414 | 1/2" F | Ø 14 | 1 | 25 |
| **930**416 | 1/2" F | Ø 16 | 1 | 25 |



## 910

Female fitting.
For annealed copper, hard copper, brass, mild steel and stainless steel pipes.
Conforms to standard UNI EN 1254-4.
**For hydraulic and domestic water systems**.
(black O-ring conforms to standard EN 681.1).

Maximum working pressure: 16 bar
Medium temperature range: -25–120 °C
Finish: chrome plated

| Code | Connection | Pipe diameter | | |
|---|---|---|---|---|
| **910**310 | 3/8" F | Ø 10 | 1 | 50 |
| **910**312 | 3/8" F | Ø 12 | 1 | 50 |
| **910**314 | 3/8" F | Ø 14 | 1 | 50 |
| **910**410 | 1/2" F | Ø 10 | 1 | 50 |
| **910**412 | 1/2" F | Ø 12 | 1 | 50 |
| **910**414 | 1/2" F | Ø 14 | 1 | 50 |
| **910**415 | 1/2" F | Ø 15 | 1 | 50 |



## 914

Male fitting.
For annealed copper, hard copper, brass, mild steel and stainless steel pipes.
Conforms to standard UNI EN 1254-4.
**For hydraulic and domestic water systems**.
(black O-Ring conforms to standard EN 681.1).

Maximum working pressure: 16 bar
Medium temperature range: -25–120 °C
Finish: chrome plated

| Code | Connection | Pipe diameter | | |
|---|---|---|---|---|
| **914**310 | 3/8" M | Ø 10 | 1 | 50 |
| **914**312 | 3/8" M | Ø 12 | 1 | 50 |
| **914**314 | 3/8" M | Ø 14 | 1 | 50 |
| **914**410 | 1/2" M | Ø 10 | 1 | 50 |
| **914**412 | 1/2" M | Ø 12 | 1 | 50 |
| **914**414 | 1/2" M | Ø 14 | 1 | 50 |
| **914**415 | 1/2" M | Ø 15 | 1 | 50 |



## 913

Coupling sleeve.
For annealed copper, hard copper, brass, mild steel and stainless steel pipes.
Conforms to standard UNI EN 1254-4.
**For hydraulic and domestic water systems**.
(Black O-ring conforms to standard EN 681.1).

Maximum working pressure: 16 bar
Medium temperature range: -25–120 °C

| Code | Pipe diameter | | |
|---|---|---|---|
| **913**010 | Ø 10 | 1 | 50 |
| **913**012 | Ø 12 | 1 | 50 |
| **913**014 | Ø 14 | 1 | 50 |

Mechanical fittings with O-ring seal are not suitable for use with fuel added with RME ( Rape Methyl ester)

# Spare parts for mechanical fittings with O-ring seal



Spare O-Ring.
For 900, 903, 904, 9050, 9057, 9058, 9060, 9067, 9068, 930, 910, 913 and 914 series mechanical fittings.
**For hydraulic systems and for human consumption**.

| Code | Notes | Ø (mm) | | |
|---|---|---|---|---|
| R97020 | - | 8 | 1 | - |
| R97022 | only for codes 900310, 903010, 904310, 910310, 913010 e 914310. | 10 | 1 | - |
| R97021 | - | 10 | 1 | - |
| R97023 | - | 12 | 1 | - |
| R97024 | - | 14 | 1 | - |
| R47037 | - | 15 | 1 | - |
| R97025 | - | 16 | 1 | - |
| R97026 | - | 18 | 1 | - |
| R97027 | - | 22 | 1 | - |



Spare O-Ring.
For 900, 904, 910310, 9057, 9058, 930 series mechanical fittings.
**For gas and liquid fuel systems (not including gasoline)**.

| Code | Notes | Ø (mm) | | |
|---|---|---|---|---|
| R97012 | - | 10 | 1 | - |
| R97013 | only for codes 900310, 904310, 905730 e 905830. | 10 | 1 | - |
| R97014 | - | 12 | 1 | - |
| R97015 | - | 14 | 1 | - |
| R97016 | - | 15 | 1 | - |
| R97017 | - | 16 | 1 | - |
| R97018 | - | 18 | 1 | - |
| R97019 | - | 22 | 1 | - |



Spare locking ring.
For 900, 903, 904, 9050, 9057, 9058, 9060, 9067, 9068, 930, 910, 913 and 914 series mechanical fittings.

| Code | Notes | Ø (mm) | | |
|---|---|---|---|---|
| R91236 | - | 8 | 1 | - |
| R91237 | only for codes 900310, 903010, 904310, 910310, 913010 e 914310. | 10 | 1 | - |
| R91238 | - | 10 | 1 | - |
| R91239 | - | 12 | 1 | - |
| R41423 | - | 14 | 1 | - |
| R41424 | - | 15 | 1 | - |
| R91240 | - | 16 | 1 | - |
| R41448 | - | 18 | 1 | - |
| R91235 | - | 22 | 1 | - |
| R91241 | - | 28 | 1 | - |

## Fittings for polyethylene pipes



### 860

Female fitting.
For polyethylene pipes.

Maximum working pressure: 16 bar
Medium temperature range: 0–40 °C
Material: brass

| Code | Pipe diameter | Connection | Notes | | |
|---|---|---|---|---|---|
| **860**420 | Ø 20 | Rp 1/2″ F | - | 12 | 60 |
| **860**421 | Ø 21 | 1/2″ F | without DVGW and SVGW certifications | 12 | 60 |
| **860**525 | Ø 25 | Rp 3/4″ F | - | 10 | 50 |
| **860**527 | Ø 27 | 3/4″ F | without DVGW and SVGW certifications | 10 | 50 |
| **860**625 | Ø 25 | Rp 1″ F | - | 10 | 60 |
| **860**632 | Ø 32 | Rp 1″ F | - | 10 | 50 |
| **860**634 | Ø 34 | 1″ F | without DVGW and SVGW certifications | 10 | 50 |
| **860**740 | Ø 40 | Rp 1 1/4″ F | - | 10 | 50 |
| **860**850 | Ø 50 | Rp 1 1/2″ F | - | 5 | 25 |
| **860**963 | Ø 63 | Rp 2″ F | - | 1 | 8 |



### 860

Female fitting.
Stainless steel tie-rods.
For polyethylene pipes.

Maximum working pressure: 10 bar
Medium temperature range: 0–40 °C
Material: cast iron

| Code | Pipe connection | Connection | | |
|---|---|---|---|---|
| **860**075 | Ø 75 | Rp 2 1/2″ F | 1 | - |
| **860**090 | Ø 90 | Rp 3″ F | 1 | - |
| **860**110 | Ø 110 | Rp 4″ F | 1 | - |



### 875

Reduced female fitting.
For polyethylene pipes.

Maximum working pressure: 16 bar
Medium temperature range: 0–40 °C
Material: brass

| Code | Pipe diameter | Connection | | |
|---|---|---|---|---|
| **875**425 | Ø 25 | Rp 1/2″ F | 10 | 50 |
| **875**532 | Ø 32 | Rp 3/4″ F | 10 | 50 |
| **875**640 | Ø 40 | Rp 1″ F | 10 | 50 |



### 861

Male fitting.
For polyethylene pipes.

Maximum working pressure: 16 bar
Medium temperature range: 0–40 °C
Material: brass

| Code | Pipe diameter | Connection | Notes | | |
|---|---|---|---|---|---|
| **861**420 | Ø 20 | 1/2″ M | - | 12 | 60 |
| **861**421 | Ø 21 | 1/2″ M | without DVGW and SVGW certifications | 12 | 60 |
| **861**525 | Ø 25 | 3/4″ M | - | 10 | 50 |
| **861**527 | Ø 27 | 3/4″ M | without DVGW and SVGW certifications | 10 | 50 |
| **861**625 | Ø 25 | 1″ M | - | 10 | 60 |
| **861**632 | Ø 32 | 1″ M | - | 10 | 50 |
| **861**634 | Ø 34 | 1″ M | without DVGW and SVGW certifications | 10 | 50 |
| **861**740 | Ø 40 | 1 1/4″ M | - | 10 | 50 |
| **861**850 | Ø 50 | 1 1/2″ M | - | 5 | 25 |
| **861**963 | Ø 63 | 2″ M | - | 1 | 8 |



### 861

Male fitting.
Stainless steel tie-rods.
For polyethylene pipes.

Maximum working pressure: 10 bar
Medium temperature range: 0–40 °C
Material: cast iron

| Code | Pipe diameter | Connection | | |
|---|---|---|---|---|
| **861**075 | Ø 75 | 2 1/2″ M | 1 | - |
| **861**090 | Ø 90 | 3″ M | 1 | - |
| **861**110 | Ø 110 | 4″ M | 1 | - |



### 876

Female fitting with union.
For polyethylene pipes.

Maximum working pressure: 16 bar
Medium temperature range: 0–40 °C
Material: brass

| Code | Pipe diameter | Connection | | |
|---|---|---|---|---|
| **876**520 | Ø 20 | Rp 3/4″ F | 15 | 75 |
| **876**525 | Ø 25 | Rp 3/4″ F | 12 | 60 |
| **876**625 | Ø 25 | Rp 1″ F | 12 | 60 |
| **876**632 | Ø 32 | Rp 1″ F | 10 | 50 |



## 862

Reduced male fitting.
For polyethylene pipes.

Maximum working pressure: 16 bar
Medium temperature range: 0–40 °C
Material: brass

| Code | Pipe diameter | Connection | | |
|---|---|---|---|---|
| **862**320 | Ø 20 | 3/8" M | 12 | 60 |
| **862**425 | Ø 25 | 1/2" M | 10 | 50 |
| **862**532 | Ø 32 | 3/4" M | 10 | 50 |
| **862**640 | Ø 40 | 1" M | 10 | 50 |
| **862**750 | Ø 50 | 1 1/4" M | 5 | 25 |
| **862**863 | Ø 63 | 1 1/2" M | 1 | 8 |



## 888

Flanged fitting, PN 10 EN 1092-1.
For polyethylene pipes.

Maximum working pressure: 10 bar
Medium temperature range: 0–40 °C
Material: cast iron

| Code | Pipe diameter | Connection | | |
|---|---|---|---|---|
| **888**075 | Ø 75 | DN 65 - PN 10 | 1 | - |
| **888**090 | Ø 90 | DN 80 - PN 10 | 1 | - |
| **888**110 | Ø 110 | DN 100 - PN 10 | 1 | - |
| **888**125 | Ø 125 | DN 100 - PN 10 | 1 | - |



## 863

Sleeve coupling.
For polyethylene pipes.

Maximum working pressure: 16 bar
Medium temperature range: 0–40 °C
Material: brass

| Code | Pipe diameter | Notes | | |
|---|---|---|---|---|
| **863**020 | Ø 20 | - | 15 | 75 |
| **863**021 | Ø 21 | without DVGW and SVGW certifications | 15 | 75 |
| **863**025 | Ø 25 | - | 12 | 60 |
| **863**027 | Ø 27 | without DVGW and SVGW certifications | 10 | 50 |
| **863**032 | Ø 32 | - | 10 | 50 |
| **863**034 | Ø 34 | without DVGW and SVGW certifications | 5 | 25 |
| **863**040 | Ø 40 | - | 5 | 25 |
| **863**050 | Ø 50 | - | 5 | 25 |
| **863**063 | Ø 63 | - | 1 | 6 |



## 863

Sleeve coupling.
For polyethylene pipes. Stainless steel tie-rods.

Maximum working pressure: 10 bar
Medium temperature range: 0–40 °C
Material: cast iron

| Code | Pipe diameter | | |
|---|---|---|---|
| **863**075 | Ø 75 | 1 | - |
| **863**090 | Ø 90 | 1 | - |
| **863**110 | Ø 110 | 1 | - |
| **863**125 | Ø 125 | 1 | - |



## 864

Tee fitting.
For polyethylene pipes.

Maximum working pressure: 16 bar
Medium temperature range: 0–40 °C
Material: brass

| Code | Pipe diameter | Notes | | |
|---|---|---|---|---|
| **864**020 | Ø 20 | - | 10 | 50 |
| **864**021 | Ø 21 | without DVGW and SVGW certifications | 10 | 50 |
| **864**025 | Ø 25 | - | 10 | 50 |
| **864**027 | Ø 27 | without DVGW and SVGW certifications | 5 | 25 |
| **864**032 | Ø 32 | - | 5 | 25 |
| **864**034 | Ø 34 | without DVGW and SVGW certifications | 4 | 20 |
| **864**040 | Ø 40 | - | 1 | 5 |
| **864**050 | Ø 50 | - | 1 | 5 |
| **864**063 | Ø 63 | - | 1 | 5 |



## 865

Reduced male-female tee fitting.
For polyethylene pipes.

Maximum working pressure: 16 bar
Medium temperature range: 0–40 °C
Material: brass

| Code | Connection 1 | Connection 2 | | |
|---|---|---|---|---|
| **865**420 | 1/2" M, Ø 20 | 3/8" F | 10 | 50 |
| **865**525 | 3/4" M, Ø 25 | 1/2" F | 10 | 50 |
| **865**632 | 1" M, Ø 32 | 3/4" F | 5 | 25 |
| **865**740 | 1 1/4" F, Ø 40 | 1" F | 1 | 5 |
| **865**850 | 1 1/2" M, Ø 50 | 1 1/4" F | 1 | 5 |
| **865**963 | 2" M, Ø 63 | 1 1/2" F | 1 | 5 |



## 866

Elbow fitting.
For polyethylene pipes.

Maximum working pressure: 16 bar
Medium temperature range: 0–40 °C
Material: brass

| Code | Pipe diameter | | |
|---|---|---|---|
| **866**020 | Ø 20 | 10 | 50 |
| **866**025 | Ø 25 | 10 | 50 |
| **866**032 | Ø 32 | 5 | 25 |
| **866**040 | Ø 40 | 4 | 20 |
| **866**050 | Ø 50 | 3 | 15 |
| **866**063 | Ø 63 | 1 | 5 |



## 867

Male elbow fitting.
For polyethylene pipes.

Maximum working pressure: 16 bar
Medium temperature range: 0–40 °C
Material: brass

| Code | Pipe diameter | Connection | | |
|---|---|---|---|---|
| **867**420 | Ø 20 | 1/2″ M | 10 | 50 |
| **867**525 | Ø 25 | 3/4″ M | 10 | 50 |
| **867**632 | Ø 32 | 1″ M | 10 | 50 |
| **867**740 | Ø 40 | 1 1/4″ M | 4 | 20 |
| **867**850 | Ø 50 | 1 1/2″ M | 4 | 20 |
| **867**963 | Ø 63 | 2″ M | 1 | 5 |



## 868

Female elbow fitting.
For polyethylene pipes.

Maximum working pressure: 16 bar
Medium temperature range: 0–40 °C
Material: brass

| Code | Pipe diameter | Connection | | |
|---|---|---|---|---|
| **868**420 | Ø 20 | Rp 1/2″ F | 10 | 50 |
| **868**525 | Ø 25 | Rp 3/4″ F | 10 | 50 |
| **868**632 | Ø 32 | Rp 1″ F | 10 | 50 |
| **868**740 | Ø 40 | Rp 1 1/4″ F | 4 | 20 |
| **868**850 | Ø 50 | Rp 1 1/2″ F | 4 | 20 |
| **868**963 | Ø 63 | Rp 2″ F | 1 | 5 |



## 869

Female elbow fitting with wall connections.
For polyethylene pipes.

Maximum working pressure: 16 bar
Medium temperature range: 0–40 °C
Material: brass

| Code | Pipe diameter | Connection | | |
|---|---|---|---|---|
| **869**420 | Ø 20 | Rp 1/2″ F | 5 | 25 |
| **869**425 | Ø 25 | Rp 1/2″ F | 4 | 20 |
| **869**525 | Ø 25 | Rp 3/4″ F | 4 | 20 |



## 870

Coupling sleeve, for repairs, brass body.
For polyethylene pipes.
Allows pipe repairs with a maximum distance of 50 mm between pipe ends.

Maximum working pressure: 16 bar
Medium temperature range: 0–40 °C
Material: brass

| Code | Pipe diameter | | |
|---|---|---|---|
| **870**025 | Ø 25 | 10 | 50 |
| **870**032 | Ø 32 | 5 | 25 |
| **870**040 | Ø 40 | 4 | 20 |
| **870**050 | Ø 50 | 3 | 15 |



## 871

Fitting with ball valve.
For polyethylene pipes.

Maximum working pressure: 16 bar
Medium temperature range: 0–40 °C
Material: brass

| Code | Pipe diameter | Connection | | |
|---|---|---|---|---|
| **871**425 | Ø 25 | Rp 1/2″ F | 10 | 50 |
| **871**525 | Ø 25 | Rp 3/4″ F | 5 | 25 |
| **871**532 | Ø 32 | Rp 3/4″ F | 5 | 25 |



## 960

Female fitting.
For polyethylene pipes.

Maximum working pressure: 16 bar
Medium temperature range: 2–40 °C
Material: dezincification resistant brass DR "low lead"

| Code | Inlet connection | Outlet connection | | |
|---|---|---|---|---|
| **960**420 | Ø 20 | Rp 1/2" F | 12 | 60 |
| **960**525 | Ø 25 | Rp 3/4" F | 10 | 50 |
| **960**625 | Ø 25 | Rp 1" F | 10 | 60 |
| **960**632 | Ø 32 | Rp 1" F | 10 | 50 |
| **960**740 | Ø 40 | Rp 1 1/4" F | 10 | 50 |
| **960**850 | Ø 50 | Rp 1 1/2" F | 5 | 25 |
| **960**963 | Ø 63 | Rp 2" F | 1 | 8 |



## 975

Reduced female fitting.
For polyethylene pipes.

Maximum working pressure: 16 bar
Medium temperature range: 1–40 °C

| Code | Inlet connection | Outlet connection | | |
|---|---|---|---|---|
| **975**532 | Ø 32 | Rp 3/4" F | 10 | 50 |
| **975**640 | Ø 40 | Rp 1" F | 10 | 50 |
| **975**732 | Ø 32 | Rp 1 1/4" F | 10 | 50 |
| **975**750 | Ø 50 | Rp 1 1/4" F | 5 | 25 |



## 961

Male fitting.
For polyethylene pipes.

Maximum working pressure: 16 bar
Medium temperature range: 2–40 °C
Material: dezincification resistant brass DR "low lead"

| Code | Inlet connection | Outlet connection | | |
|---|---|---|---|---|
| **961**420 | Ø 20 | 1/2" M | 12 | 60 |
| **961**520 | Ø 20 | 3/4" M | 10 | 50 |
| **961**525 | Ø 25 | 3/4" M | 10 | 50 |
| **961**625 | Ø 25 | 1" M | 10 | 60 |
| **961**632 | Ø 32 | 1" M | 10 | 50 |
| **961**732 | Ø 32 | 1 1/4" M | 10 | 50 |
| **961**740 | Ø 40 | 1 1/4" M | 6 | 30 |
| **961**840 | Ø 40 | 1 1/2" M | 5 | 25 |
| **961**850 | Ø 50 | 1 1/2" M | 5 | 25 |
| **961**950 | Ø 50 | 2" M | 1 | 8 |
| **961**963 | Ø 63 | 2" M | 1 | 10 |



## 962

Reduced male fitting.
For polyethylene pipes.

Maximum working pressure: 16 bar
Medium temperature range: 2–40 °C
Material: dezincification resistant brass DR "low lead"

| Code | Inlet connection | Outlet connection | | |
|---|---|---|---|---|
| **962**532 | Ø 32 | 3/4" M | 10 | 50 |
| **962**640 | Ø 40 | 1" M | 6 | 30 |



## 963

Sleeve fitting.
For polyethylene pipes.

Maximum working pressure: 16 bar
Medium temperature range: 2–40 °C
Material: dezincification resistant brass DR "low lead"

| Code | Connection | | |
|---|---|---|---|
| **963**020 | Ø 20 | 15 | 75 |
| **963**025 | Ø 25 | 12 | 60 |
| **963**032 | Ø 32 | 10 | 50 |
| **963**040 | Ø 40 | 5 | 20 |
| **963**050 | Ø 50 | 5 | 25 |
| **963**063 | Ø 63 | 1 | 6 |



## 964

Tee fitting.
For polyethylene pipes.

Maximum working pressure: 16 bar
Medium temperature range: 2–40 °C
Material: dezincification resistant brass DR "low lead"

| Code | Connection | | |
|---|---|---|---|
| **964**020 | Ø 20 | 10 | 50 |
| **964**025 | Ø 25 | 6 | 30 |
| **964**032 | Ø 32 | 5 | 25 |
| **964**040 | Ø 40 | 1 | 5 |
| **964**050 | Ø 50 | 1 | 5 |



## 966

Elbow fitting.
For polyethylene pipes.

Maximum working pressure: 16 bar
Medium temperature range: 2–40 °C
Material: dezincification resistant brass DR "low lead"

| Code | Connection | | |
|---|---|---|---|
| **966**025 | Ø 25 | 10 | 50 |
| **966**032 | Ø 32 | 5 | 25 |
| **966**040 | Ø 40 | 4 | 20 |



## 967

Male elbow fitting.
For polyethylene pipes.

Maximum working pressure: 16 bar
Medium temperature range: 2–40 °C
Material: dezincification resistant brass DR "low lead"

| Code | Inlet connection | Outlet connection | | |
|---|---|---|---|---|
| **967**632 | Ø 32 | 1" M | 10 | 50 |



## 968

Female elbow fitting.
For polyethylene pipes.

Maximum working pressure: 16 bar
Medium temperature range: 2–40 °C
Material: dezincification resistant brass DR "low lead"

| Code | Inlet connection | Outlet connection | | |
|---|---|---|---|---|
| **968**632 | Ø 32 | Rp 1" F | 10 | 50 |
| **968**740 | Ø 40 | Rp 1 1/4" F | 4 | 20 |



## 970

Long sleeve fitting.
For polyethylene pipes. Allows pipe repairs with a maximum distance of 50 mm between pipe ends.

Maximum working pressure: 16 bar
Medium temperature range: 1–40 °C

| Code | Connection | | |
|---|---|---|---|
| **970**032 | Ø 32 | 5 | 25 |
| **970**040 | Ø 40 | 5 | - |
| **970**050 | Ø 50 | 4 | - |



## 986

Reduction kit.

| Code | Inlet connection | Outlet connection | | |
|---|---|---|---|---|
| **986**032 | Ø 32 | Ø 25 | 1 | - |
| **986**043 | Ø 40 | Ø 32 | 1 | - |
| **986**053 | Ø 50 | Ø 32 | 1 | - |
| **986**054 | Ø 50 | Ø 40 | 1 | - |



## 980

Kit.

| Code | Connection | | |
|---|---|---|---|
| **980**025 | Ø 25 | 100 | - |
| **980**032 | Ø 32 | 100 | - |
| **980**040 | Ø 40 | 50 | - |
| **980**050 | Ø 50 | 50 | - |
| **980**063 | Ø 63 | 50 | - |

# Fittings for iron pipes



## 890

Female fitting.

Maximum working pressure: 16 bar
Medium temperature range: 0–40 °C
Material: brass

| Code | Pipe diameter | Connection | | |
|---|---|---|---|---|
| **890**421 | Ø 21 | 1/2" F | 12 | 60 |
| **890**527 | Ø 27 | 3/4" F | 10 | 50 |
| **890**634 | Ø 34 | 1" F | 10 | 50 |



## 891

Male fitting.

Maximum working pressure: 16 bar
Medium temperature range: 0–40 °C
Material: brass

| Code | Pipe diameter | Connection | | |
|---|---|---|---|---|
| **891**421 | Ø 21 | 1/2" M | 12 | 60 |
| **891**527 | Ø 27 | 3/4" M | 10 | 50 |
| **891**634 | Ø 34 | 1" M | 10 | 50 |



## 893

Sleeve fitting.
For steel pipes.
Without stop for as a repair joint.
Can join the pipe with a maximum gap of 15 mm between the ends.

Maximum working pressure: 16 bar
Medium temperature range: 0–40 °C
Material: brass

| Code | Pipe diameter | | |
|---|---|---|---|
| **893**021 | Ø 21 | 15 | 75 |
| **893**027 | Ø 27 | 10 | 50 |
| **893**034 | Ø 34 | 5 | 25 |



## 894

Tee fitting.

Maximum working pressure: 16 bar
Medium temperature range: 0–40 °C
Material: brass

| Code | Pipe diameter | | |
|---|---|---|---|
| **894**021 | Ø 21 | 10 | 50 |
| **894**027 | Ø 27 | 5 | 25 |
| **894**034 | Ø 34 | 4 | 20 |

# Accessories and spare parts for deca-fittings



## 886

Reduction kit.

| Code | Notes | | |
|---|---|---|---|
| **886**022 | from Ø25 to Ø20 | 1 | - |
| **886**032 | from Ø32 to Ø25 | 1 | - |
| **886**043 | from Ø40 to Ø32 | 1 | - |
| **886**054 | from Ø50 to Ø40 | 1 | - |
| **886**065 | from Ø63 to Ø50 | 1 | - |




## 887

Pipe stiffener.

| Code | Pipe diameter | Notes | | |
|---|---|---|---|---|
| **887**120 | Ø 20x2 | for PN 10 series | 10 | - |
| **887**223 | Ø 25x2,3 | for PN 10 series | 10 | - |
| **887**330 | Ø 32x3 | for S 5 PN 4 series | 10 | - |
| **887**437 | Ø 40x3,7 | for S 5 PN 4 series | 5 | - |
| **887**546 | Ø 50x4,6 | for S 5 PN 4 series | 5 | - |
| **887**658 | Ø 63x5,8 | for S 5 PN 4 series | 5 | - |
| **887**128 | Ø 20x2,8 | for REHAU pipes | 10 | - |
| **887**235 | Ø 25x3,5 | for REHAU pipes | 10 | - |
| **887**130 | Ø 20x3 | for S 5 PN 4 series | 10 | - |
| **887**230 | Ø 25x3 | for S 5 PN 4 series | 10 | - |
| **887**430 | Ø 40x3 | for S 8 PN 2,5–4 series | 5 | - |
| **887**530 | Ø 50x3 | for S 8 PN 2,5–4 series | 10 | - |
| **887**636 | Ø 63x3,6 | for S 8 PN 2,5–4 series | 5 | - |



## 877

Pipe clenching ring.
Not chrome plated.

| Code | Ø (mm) | Material | | |
|---|---|---|---|---|
| **877**020 | 20 | brass | 50 | - |
| **877**021 | 21 | brass | 1 | - |
| **877**121 | 21 | stainless steel | 1 | - |
| **877**025 | 25 | brass | 50 | - |
| **877**027 | 27 | brass | 1 | - |
| **877**127 | 27 | stainless steel | 1 | - |
| **877**032 | 32 | brass | 50 | - |
| **877**034 | 34 | brass | 1 | - |
| **877**134 | 34 | stainless steel | 1 | - |
| **877**040 | 40 | brass | 1 | - |
| **877**050 | 50 | brass | 1 | - |
| **877**063 | 63 | brass | 1 | - |



## 878

Brass washer.

| Code | Ø (mm) | | |
|---|---|---|---|
| **878**020 | 20 | 50 | - |
| **878**021 | 21 | 1 | - |
| **878**025 | 25 | 50 | - |
| **878**027 | 27 | 1 | - |
| **878**032 | 32 | 50 | - |
| **878**034 | 34 | 1 | - |
| **878**040 | 40 | 1 | - |
| **878**050 | 50 | 1 | - |
| **878**063 | 63 | 1 | - |



## 879

O-Ring.

| Code | Ø (mm) | | |
|---|---|---|---|
| **879**020 | 20 | 50 | 500 |
| **879**021 | 21 | 1 | - |
| **879**025 | 25 | 50 | 500 |
| **879**027 | 27 | 1 | - |
| **879**032 | 32 | 50 | 500 |
| **879**034 | 34 | 1 | - |
| **879**040 | 40 | 1 | - |
| **879**050 | 50 | 1 | - |
| **879**063 | 63 | 1 | - |

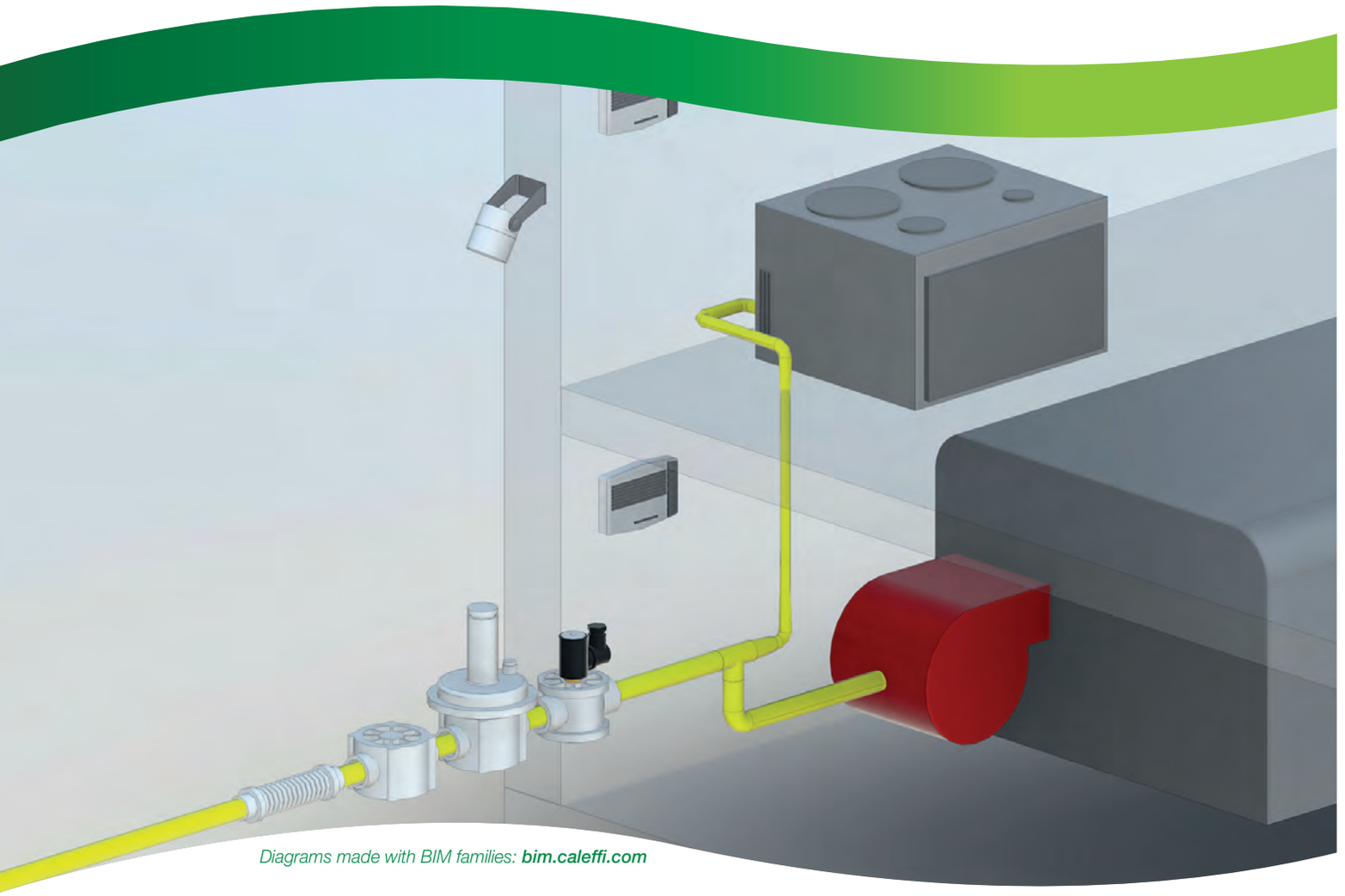

*Diagrams made with BIM families:* ***bim.caleffi.com***

**Gas filters and regulators**
**Gas solenoid valves**
**Gas control devices and accessories**

# GAS FILTERS AND REGULATORS

## Gas filters



### 847

Compact gas filter.
Filtering capacity: Ø ≥ 50 µm.

Maximum working pressure: 2 bar
Gas filtration class: G2 (according to EN 779)

CE

| Code | Connection | | |
|---|---|---|---|
| **847**004 | Rp 1/2" F | 1 | 20 |
| **847**005 | Rp 3/4" F | 1 | 20 |



### 848

Gas filter.
Filtering capacity: Ø ≥ 50 µm.

Maximum working pressure: 2 bar
Gas filtration class: G2 (according to EN 779)

CE

| Code | Connection | | |
|---|---|---|---|
| **848**004 | Rp 1/2" F | 1 | 30 |
| **848**005 | Rp 3/4" F | 1 | 30 |
| **848**006 | Rp 1" F | 1 | 30 |
| **848**007 | Rp 1 1/4" F | 1 | 15 |
| **848**008 | Rp 1 1/2" F | 1 | 15 |
| **848**009 | Rp 2" F | 1 | 10 |



### 848

Gas filter. Flanged connections.
To be coupled with flat counterflanges EN 1092-1.
Filtering capacity: Ø ≥ 50 µm.

Maximum working pressure: 2 bar
Gas filtration class: G2 (according to EN 779)

CE

| Code | Connection | | |
|---|---|---|---|
| **848**060 | DN 65 - PN 16 | 1 | - |
| **848**080 | DN 80 - PN 16 | 1 | - |
| **848**100 | DN 100 - PN 16 | 1 | - |

## Strandard gas filters and regulators



### 850

Gas pressure closing filter regulator, double diaphragm. Threaded connections.
Filtering capacity: Ø ≥ 50 µm.
Regulation and closing at null flow according to UNI EN 88.
Compliance with directive ATEX (II 2G - II 2D).

Maximum upstream pressure: 500 mbar
Medium temperature range: -15–60 °C
Gas filtration class: G2 (according to EN 779)

Ex CE

| Code | Connection | Adjustment pressure range (mbar) | | |
|---|---|---|---|---|
| **850**004 | Rp 1/2" F | 18–40 | 1 | - |
| **850**005 | Rp 3/4" F | 18–40 | 1 | - |
| **850**006 | Rp 1" F | 18–40 | 1 | - |
| **850**007 | Rp 1 1/4" F | 13–23 | 1 | - |
| **850**008 | Rp 1 1/2" F | 13–23 | 1 | - |
| **850**009 | Rp 2" F | 13–23 | 1 | - |



### 850

Gas pressure closing filter regulator, double diaphragm. Flanged connections.
To be coupled with flat counterflanges EN 1092-1.
Filtering capacity: Ø ≥ 50 µm.
Regulation and closing at null flow according to UNI EN 88.
Compliance with directive ATEX (II 2G - II 2D).

Maximum upstream pressure: 500 mbar
Medium temperature range: -15–60 °C
Gas filtration class: G2 (according to EN 779)

Ex CE

| Code | Connection | Adjustment pressure range (mbar) | | |
|---|---|---|---|---|
| **850**060 | DN 65 - PN 16 | 13–27 | 1 | - |
| **850**080 | DN 80 - PN 16 | 13–27 | 1 | - |
| **850**100 | DN 100 - PN 16 | 15–27 | 1 | - |



## 852

Gas pressure closing regulator, double diaphragm. Threaded connections.
Regulation and closing at null flow according to UNI EN 88.
Compliance with directive ATEX (II 2G - II 2D).

Medium temperature range: -15–60 °C
Maximum upstream pressure: 500 mbar

| Code | Connection | Adjustment pressure range (mbar) | | |
|---|---|---|---|---|
| **852**004 | Rp 1/2″F | 18–40 | 1 | - |
| **852**005 | Rp 3/4″F | 18–40 | 1 | - |
| **852**006 | Rp 1″F | 18–40 | 1 | - |
| **852**007 | Rp 1 1/4″F | 13–23 | 1 | - |
| **852**008 | Rp 1 1/2″F | 13–23 | 1 | - |
| **852**009 | Rp 2″F | 13–23 | 1 | - |



## 852

Gas pressure closing regulator, double diaphragm. Flanged connections.
To be coupled with flat counterflanges EN 1092-1.
Compliance with directive ATEX (II 2G - II 2D).
Regulation and closing at null flow according to UNI EN 88.

Medium temperature range: -15–60 °C
Maximum upstream pressure: 500 mbar

| Code | Connection | Adjustment pressure range (mbar) | | |
|---|---|---|---|---|
| **852**060 | DN 65 - PN 16 | 13–27 | 1 | - |
| **852**080 | DN 80 - PN 16 | 13–27 | 1 | - |
| **852**100 | DN 100 - PN 16 | 15–27 | 1 | - |

# GAS SOLENOID VALVES

## Solenoid valves for gas with manual reset - NC



## 8541

Solenoid valve for gas, normally closed, with manual reset.
Class A - Group 2.

Maximum working pressure: 500 mbar
Protection class: IP 65

| Code | Connection | Electric supply | | |
|---|---|---|---|---|
| **8541**24 | Rp 1/2″F | 230 V AC | 1 | 20 |
| **8541**25 | Rp 3/4″F | 230 V AC | 1 | 20 |
| **8541**26 | Rp 1″F | 230 V AC | 1 | 20 |
| **8541**44 | Rp 1/2″F | 24 V AC | 1 | 20 |
| **8541**45 | Rp 3/4″F | 24 V AC | 1 | 20 |
| **8541**46 | Rp 1″F | 24 V AC | 1 | 20 |



## 837

Solenoid valve for gas, normally closed, with manual reset.
Class A - Group 2.

Maximum working pressure: 500 mbar
Protection class: IP 65

| Code | Connection | Electric supply | | |
|---|---|---|---|---|
| **837**005 | Rp 3/4″F | 230 V AC | 1 | - |
| **837**006 | Rp 1″F | 230 V AC | 1 | - |
| **837**007 | Rp 1 1/4″F | 230 V AC | 1 | 10 |
| **837**008 | Rp 1 1/2″F | 230 V AC | 1 | 10 |
| **837**009 | Rp 2″F | 230 V AC | 1 | - |
| **837**105 | Rp 3/4″F | 24 V AC | 1 | 10 |
| **837**106 | Rp 1″F | 24 V AC | 1 | - |
| **837**107 | Rp 1 1/4″F | 24 V AC | 1 | - |
| **837**108 | Rp 1 1/2″F | 24 V AC | 1 | - |
| **837**109 | Rp 2″F | 24 V AC | 1 | - |
| **837**205 | Rp 3/4″F | 12 V DC | 1 | 10 |
| **837**206 | Rp 1″F | 12 V DC | 1 | 10 |
| **837**207 | Rp 1 1/4″F | 12 V DC | 1 | 10 |
| **837**208 | Rp 1 1/2″F | 12 V DC | 1 | 10 |
| **837**209 | Rp 2″F | 12 V DC | 1 | - |



## 837

Solenoid valve for gas, normally closed, with manual reset. Flanged connections.
To be coupled with flat counterflanges EN 1092-1.
Class A - Group 2.

Maximum working pressure: 500 mbar
Protection class: IP 65

CE

| Code | Connection | Electric supply | | |
|---|---|---|---|---|
| **837**060 | DN 65 - PN 16 | 230 V AC | 1 | - |
| **837**080 | DN 80 - PN 16 | 230 V AC | 1 | - |
| **837**100 | DN 100 - PN 16 | 230 V AC | 1 | - |
| **837**120 | DN 125 - PN 16 | 230 V AC | 1 | - |
| **837**150 | DN 150 - PN 16 | 230 V AC | 1 | - |
| **837**160 | DN 65 - PN 16 | 24 V AC | 1 | - |
| **837**180 | DN 80 - PN 16 | 24 V AC | 1 | - |
| **837**190 | DN 100 - PN 16 | 24 V AC | 1 | - |
| **837**220 | DN 125 - PN 16 | 24 V AC | 1 | - |
| **837**250 | DN 150 - PN 16 | 24 V AC | 1 | - |

# Solenoid valves for gas with automatic reset - NC



## 838

Solenoid valve for gas, normally closed.
Class A - Group 2.

Maximum working pressure: 360 mbar
Protection class: IP 65

CE

| Code | Connection | Notes | Electric supply | | |
|---|---|---|---|---|---|
| **838**004 | Rp 1/2″F | - | 230 V AC | 1 | 20 |
| **838**005 | Rp 3/4″F | - | 230 V AC | 1 | - |
| **838**006 | Rp 1″F | - | 230 V AC | 1 | 10 |
| **838**007 | Rp 1 1/4″F | with upper hexagonal fixing nut | 230 V AC | 1 | 5 |
| **838**008 | Rp 1 1/2″F | with upper hexagonal fixing nut | 230 V AC | 1 | 5 |
| **838**009 | Rp 2″F | with upper hexagonal fixing nut | 230 V AC | 1 | 5 |
| **838**104 | Rp 1/2″F | - | 24 V AC | 1 | - |
| **838**105 | Rp 3/4″F | - | 24 V AC | 1 | 20 |
| **838**106 | Rp 1″F | - | 24 V AC | 1 | 10 |
| **838**107 | Rp 1 1/4″F | with upper hexagonal fixing nut | 24 V AC | 1 | - |
| **838**108 | Rp 1 1/2″F | with upper hexagonal fixing nut | 24 V AC | 1 | - |
| **838**109 | Rp 2″F | with upper hexagonal fixing nut | 24 V AC | 1 | - |



## 838

Solenoid valve for gas, normally closed.
Flanged connections.
To be coupled with flat counterflanges EN 1092-1.
Class A - Group 2.

Maximum working pressure: 200 mbar
Protection class: IP 65

CE

| Code | Connection | Electric supply | | |
|---|---|---|---|---|
| **838**060 | DN 65 - PN 16 | 230 V AC | 1 | - |
| **838**080 | DN 80 - PN 16 | 230 V AC | 1 | - |
| **838**100 | DN 100 - PN 16 | 230 V AC | 1 | - |
| **838**120 | DN 125 - PN 16 | 230 V AC | 1 | - |
| **838**150 | DN 150 - PN 16 | 230 V AC | 1 | - |
| **838**160 | DN 65 - PN 16 | 24 V AC | 1 | - |
| **838**180 | DN 80 - PN 16 | 24 V AC | 1 | - |
| **838**190 | DN 100 - PN 16 | 24 V AC | 1 | - |
| **838**220 | DN 125 - PN 16 | 24 V AC | 1 | - |
| **838**250 | DN 150 - PN 16 | 24 V AC | 1 | - |

# Spare parts for gas solenoid valves



## 837

Spare coil, complete with connector.

CE

| Code | Article use | Electric supply | | |
|---|---|---|---|---|
| **837**A05 | 837005, 837006, 837007, 837008, 837009 | 230 V AC | 1 | - |
| **837**B05 | 837105, 837106, 837107, 837108, 837109 | 24 V AC | 1 | - |
| **837**C05 | 837205, 837206, 837207, 837208, 837209 | 12 V DC | 1 | - |
| **837**A60 | 837060, 837080, 837100, 837120, 837150 | 230 V AC | 1 | - |
| **837**B60 | 837160, 837180, 837190, 837220, 837250 | 24 V AC | 1 | - |



## 838

Spare coil, complete with connector.

CE

| Code | Article use | Electric supply | | |
|---|---|---|---|---|
| **838**A04 | 838004, 838005 | 230 V AC | 1 | - |
| **838**A06 | 838006 | 230 V AC | 1 | - |
| **838**A07 | 838007, 838008, 838009 | 230 V AC | 1 | - |
| **838**A17 | 838007, 838008, 838009 | 230 V AC | 1 | - |
| **838**B04 | 838104, 838105 | 24 V AC | 1 | - |
| **838**B06 | 838106 | 24 V AC | 1 | - |
| **838**B07 | 838107, 838108, 838109 | 24 V AC | 1 | - |
| **838**B17 | 838107, 838108, 838109 | 24 V AC | 1 | - |
| **838**A60 | 838060, 838080 | 230 V AC | 1 | - |
| **838**A00 | 838100 | 230 V AC | 1 | - |
| **838**A20 | 838120, 838150 | 230 V AC | 1 | - |
| **838**B60 | 838160, 838180 | 24 V AC | 1 | - |
| **838**B00 | 838190 | 24 V AC | 1 | - |
| **838**B20 | 838220, 838250 | 24 V AC | 1 | - |



## 839

Spare coil for normally open solenoid valve, complete with connector. **For 839 series.**

CE

| Code | Article use | Electric supply | | |
|---|---|---|---|---|
| **839**A05 | 839005, 839006, 839007, 839008, 839009, 839060, 839080, 839100, 839120, 839150 | 230 V AC | 1 | - |
| **839**B05 | 839105, 839106, 839107, 839108, 839109, 839160, 839180, 839190, 839220, 839250 | 24 V AC | 1 | - |
| **839**C05 | 839205, 839206, 839207, 839208, 839209 | 12 V DC | 1 | - |



## 8540

Spare coil for normally open gas solenoid valve, with connector. **For 8540 series**.

CE

| Code | Article use | | |
|---|---|---|---|
| **8540**12 | 854024, 854025 | 1 | - |
| **8540**14 | 854044, 854045 | 1 | - |
| **8540**02 | 854026 | 1 | - |
| **8540**04 | 854046 | 1 | - |



## 8541

Spare coil for normally closed gas solenoid valve, with connector. **For 8541 series**.

CE

| Code | Article use | | |
|---|---|---|---|
| **8541**02 | 854124, 854125, 854126 | 1 | - |
| **8541**04 | 854144, 854145, 854146 | 1 | - |

# Solenoid valves for gas with manual reset - NO



## 8540

Solenoid valve for gas, normally open, with manual reset.

Maximum working pressure: 500 mbar
Protection class: IP 65

CE

| Code | Connection | Electric supply | | |
|---|---|---|---|---|
| **8540**24 | Rp 1/2″F | 230 V AC | 1 | 20 |
| **8540**25 | Rp 3/4″F | 230 V AC | 1 | 20 |
| **8540**44 | Rp 1/2″F | 24 V AC | 1 | 20 |
| **8540**45 | Rp 3/4″F | 24 V AC | 1 | 20 |



## 839

Solenoid valve for gas, normally open with manual reset.

Maximum working pressure: 500 mbar
Protection class: IP 65

CE

| Code | Connection | Electric supply | | |
|---|---|---|---|---|
| **839**005 | Rp 3/4″F | 230 V AC | 1 | 10 |
| **839**006 | Rp 1″F | 230 V AC | 1 | - |
| **839**007 | Rp 1 1/4″F | 230 V AC | 1 | - |
| **839**008 | Rp 1 1/2″F | 230 V AC | 1 | 10 |
| **839**009 | Rp 2″F | 230 V AC | 1 | - |
| **839**105 | Rp 3/4″F | 24 V AC | 1 | 10 |
| **839**106 | Rp 1″F | 24 V AC | 1 | 10 |
| **839**107 | Rp 1 1/4″F | 24 V AC | 1 | - |
| **839**108 | Rp 1 1/2″F | 24 V AC | 1 | - |
| **839**109 | Rp 2″F | 24 V AC | 1 | - |
| **839**205 | Rp 3/4″F | 12 V DC | 1 | - |
| **839**206 | Rp 1″F | 12 V DC | 1 | - |
| **839**207 | Rp 1 1/4″F | 12 V DC | 1 | 10 |
| **839**208 | Rp 1 1/2″F | 12 V DC | 1 | 10 |
| **839**209 | Rp 2″F | 12 V AC | 1 | 10 |



## 839

Solenoid valve for gas, normally open, with manual reset. Flanged connections.
To be coupled with flat counterflanges EN 1092-1.

Maximum working pressure: 500 mbar
Protection class: IP 65

CE

| Code | Connection | Electric supply | | |
|---|---|---|---|---|
| **839**060 | DN 65 - PN 16 | 230 V AC | 1 | - |
| **839**080 | DN 80 - PN 16 | 230 V AC | 1 | - |
| **839**100 | DN 100 - PN 16 | 230 V AC | 1 | - |
| **839**120 | DN 125 - PN 16 | 230 V AC | 1 | - |
| **839**150 | DN 150 - PN 16 | 230 V AC | 1 | - |
| **839**160 | DN 65 - PN 16 | 24 V AC | 1 | - |
| **839**180 | DN 80 - PN 16 | 24 V AC | 1 | - |
| **839**190 | DN 100 - PN 16 | 24 V AC | 1 | - |
| **839**220 | DN 125 - PN 16 | 24 V AC | 1 | - |
| **839**250 | DN 150 - PN 16 | 24 V AC | 1 | - |

# GAS CONTROL DEVICES AND ACCESSORIES

## Gas accessories



### 841

Extendible stainless steel joint according to UNI 11353, for gas systems in domestic applications (max. 35 kW).
Fixed male connection: AISI 303.
Flexible: AISI 316L.
Captive female connection: AISI 303.

Maximum working pressure: 0,5 bar
Material: stainless steel

| Code | Connection 1 | Connection 2 | Length (mm) | | |
|---|---|---|---|---|---|
| **841**414 | 1/2" M | 1/2" F | 90–130 | 1 | - |
| **841**514 | 3/4" M | 3/4" F | 90–130 | 1 | - |
| **841**614 | 1" M | 1" F | 90–130 | 1 | - |
| **841**420 | 1/2" M | 1/2" F | 120–210 | 1 | - |
| **841**520 | 3/4" M | 3/4" F | 120–210 | 1 | - |
| **841**620 | 1" M | 1" F | 120–210 | 1 | - |
| **841**440 | 1/2" M | 1/2" F | 240–410 | 1 | - |
| **841**540 | 3/4" M | 3/4" F | 240–410 | 1 | - |
| **841**640 | 1" M | 1" F | 240–410 | 1 | - |



### 842

Antivibration joint for gas systems.
Conforms to standards UNI EN 676.
Threaded version: body AISI 316L, fixed male connection: FE 37.
Flanged version: body AISI 321, free flanged connections: ASTM A 105 - PN 10.
To be coupled with flat counterflanges EN 1092-1.

Maximum working pressure: 0,5 bar
Material: stainless steel

| Code | Connection | Length (mm) | | |
|---|---|---|---|---|
| **842**004 | 1/2" M | 145 | 1 | - |
| **842**005 | 3/4" M | 150 | 1 | - |
| **842**006 | 1" M | 165 | 1 | - |
| **842**007 | 1 1/4" M | 180 | 1 | - |
| **842**008 | 1 1/2" M | 210 | 1 | - |
| **842**009 | 2" M | 230 | 1 | - |
| **842**060 | DN 65 - PN 10 | 175 | 1 | - |
| **842**080 | DN 80 - PN 10 | 175 | 1 | - |
| **842**100 | DN 100 - PN 10 | 195 | 1 | - |



### 8460

Tap for gas pressure gauge, with opening button.

| Code | Connection | | |
|---|---|---|---|
| **8460**02 | 1/4" F | 1 | - |
| **8460**03 | 3/8" F | 1 | - |



### 8461

Pressure gauge for gas.
Sensitive element of diaphragm precision.
Radial connection.

Accuracy class: Pressure gauge UNI 1,6

| Code | Connection | Pressure gauge scale (mbar) | | |
|---|---|---|---|---|
| **8461**01 | 1/4" M radial connection | 0–60 | 1 | 50 |
| **8461**02 | 1/4" M radial connection | 0–100 | 1 | 50 |
| **8461**03 | 3/8" M radial connection | 0–60 | 1 | 50 |
| **8461**04 | 3/8" M radial connection | 0–100 | 1 | 50 |

## Gas detector



### 8563

Gas detector, with built-in sensor and relay outlet.
For solenoid valves 8540, 8541, 837, 838 and 839 series.
With BUS connection, for auxiliary remote sensor.
Outlet contact: 8 (2) A.
Domestic use.

Electric supply: 230 V AC
Protection class: IP 42

CE

| Code | Notes | | |
|---|---|---|---|
| **8563**00 | for methane gas | 1 | 8 |
| **8563**02 | for LPG | 1 | - |



### 8563

Auxiliary remote sensor.
For gas detector 8563 series.
Domestic use.

Electric supply: 230 V AC
Protection class: IP 42

CE

| Code | Notes | | |
|---|---|---|---|
| **8563**10 | for methane gas | 1 | - |
| **8563**12 | for LPG | 1 | 8 |



### 8565

Gas detector, with built-in sensor and relay outlet.
Without BUS connection.
Outlet contact: 8 (2) A.
For domestic use.

Electric supply: 230 V AC
Protection class: IP 42

CE

| Code | Notes | | |
|---|---|---|---|
| **8565**00 | for methane gas | 1 | 8 |
| **8565**02 | for LPG | 1 | 8 |



### 855

Gas detector, with built-in sensor and relay outlet.
Without BUS connection.
With solenoid valve normally open.

Electric supply: 230 V AC
Protection class: IP 42

CE

| Code | Connection | Notes | | |
|---|---|---|---|---|
| **855**400 | Rp 1/2" F | for methane gas | 1 | 4 |
| **855**500 | Rp 3/4" F | for methane gas | 1 | 4 |
| **855**410 | Rp 1/2" F | for LPG | 1 | 4 |
| **855**510 | Rp 3/4" F | for LPG | 1 | 8 |

## Signal and alarm accessories



### 8561

Rotating siren.
112 dB/1m.

Electric supply: 230 V AC
Protection class: IP 14

CE

| Code | | |
|---|---|---|
| **8561**02 | 1 | - |



### 8562

Electronic intermittence blinker.
Lamp power 40 W.

Electric supply: 230 V AC
Protection class: IP 65

CE

| Code | | |
|---|---|---|
| **8562**02 | 1 | - |

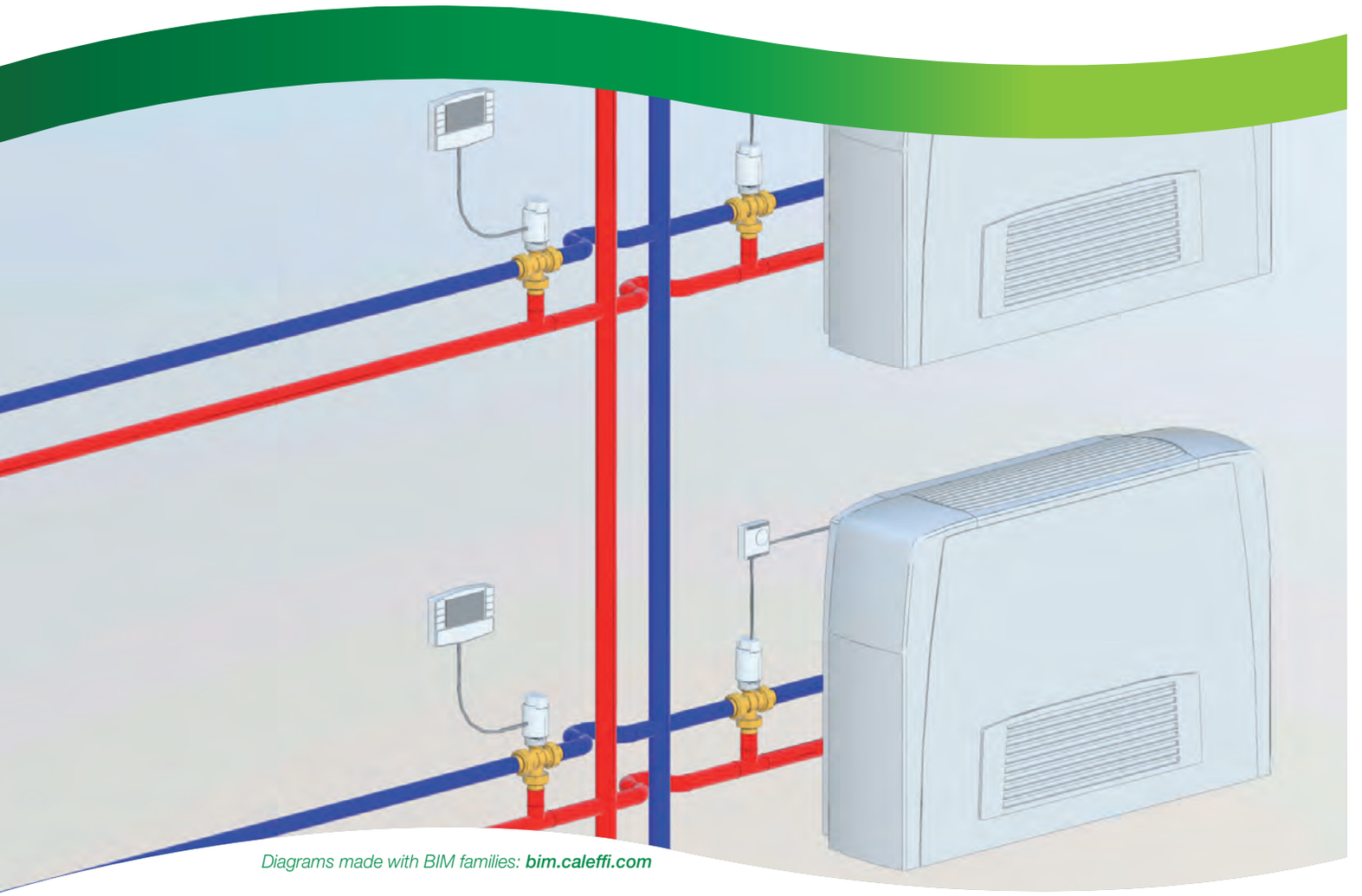

*Diagrams made with BIM families:* ***bim.caleffi.com***

**Expansion vessels**
**Control devices for autoclaves**
**Temperature regulators, thermostats and chrono-thermostats**

# EXPANSION VESSELS

## Expansion vessels for heating systems



### 556

Welded expansion vessel, for heating systems, EC certification.
Diaphragm membrane.
Conformity to EN 13831 standard.

Maximum working pressure: 6 bar
System working temperature range: -10–120 °C
Diaphragm temperature range: -10–70 °C
Maximum percentage of glycol: 50 %
Medium: water, glycol solutions
Pre-charge: 1,5 bar

CE 0045

| Code | Connection | Volume (l) | | |
|---|---|---|---|---|
| **556**008 | 3/4″ M | 8 | 1 | - |
| **556**012 | 3/4″ M | 12 | 1 | - |
| **556**018 | 3/4″ M | 18 | 1 | - |
| **556**025 | 3/4″ M | 25 | 1 | - |



### 556

Welded expansion vessel, for heating systems, EC certification.
Diaphragm membrane.
Conformity to EN 13831 standard.

Maximum working pressure: 6 bar
System working temperature range: -10–120 °C
Diaphragm temperature range: -10–70 °C
Maximum percentage of glycol: 50 %
Medium: water, glycol solutions
Pre-charge: 1,5 bar

CE 0045

| Code | Connection | Volume (l) | | |
|---|---|---|---|---|
| **556**035 | 3/4″ M | 35 | 1 | - |
| **556**050 | 3/4″ M | 50 | 1 | - |
| **556**080 | 1″ M | 80 | 1 | - |
| **556**100 | 1″ M | 100 | 1 | - |
| **556**140 | 1″ M | 140 | 1 | - |
| **556**200 | 1″ M | 200 | 1 | - |
| **556**250 | 1″ M | 250 | 1 | - |



### 556

Welded expansion vessel, for heating systems, EC certification.
Diaphragm membrane.
Conformity to EN 13831 standard.

Maximum working pressure: 6 bar
System working temperature range: -10–120 °C
Diaphragm temperature range: -10–70 °C
Maximum percentage of glycol: 50 %
Medium: water, glycol solutions
Pre-charge: 1,5 bar

CE 0045

| Code | Connection | Volume (l) | | |
|---|---|---|---|---|
| **556**300 | 1″ M | 300 | 1 | - |
| **556**400 | 1″ M | 400 | 1 | - |
| **556**500 | 1″ M | 500 | 1 | - |
| **556**600 | 1″ M | 600 | 1 | - |

## Expansion vessels for domestic water systems



### 5557

Welded expansion vessel, for hot water systems, EC certification.
Bladder diaphragm.
Conforms to EN 13831 standard.

Maximum working pressure: 10 bar
System working temperature range: -10–100 °C
Diaphragm temperature range: -10–100 °C

CE 1370

| Code | Connection | Volume (l) | | |
|---|---|---|---|---|
| **555**702 | 1/2" M | 2 | 4 | - |
| **555**705 | 3/4" M | 5 | 1 | - |
| **555**708 | 3/4" M | 8 | 1 | - |



### 568

Welded expansion vessel, for hot water systems, EC certification.
Bladder diaphragm.
Conformity to EN 13831 standard.

Maximum working pressure: 10 bar
System working temperature range: -10–70 °C
Diaphragm temperature range: -10–70 °C
Pre-charge: 2,5 bar

CE 0045

| Code | Connection | Notes | Volume (l) | | |
|---|---|---|---|---|---|
| **568**008 | 3/4" M | - | 8 | 1 | - |
| **568**012 | 3/4" M | - | 12 | 1 | - |
| **568**018 | 3/4" M | - | 18 | 1 | - |
| **568**025 | 3/4" M | - | 25 | 1 | - |
| **568**033 | 3/4" M | complete with wall mounting brackets | 33 | 1 | - |



### 568

Welded expansion vessel, for hot water systems, EC certification.
Bladder diaphragm (replaceable for volumes from 60 to 500 l).
Conformity to EN 13831 standard.

Maximum working pressure: 10 bar
System working temperature range: -10–70 °C
Diaphragm temperature range: -10–70 °C
Pre-charge: 2,5 bar

CE 0045

| Code | Connection | Volume (l) | | |
|---|---|---|---|---|
| **568**050 | 1" M | 50 | 1 | - |
| **568**060 | 1" M | 60 | 1 | - |
| **568**080 | 1" M | 80 | 1 | - |
| **568**100 | 1" M | 100 | 1 | - |
| **568**200 | 1 1/4" M | 200 | 1 | - |
| **568**300 | 1 1/4" M | 300 | 1 | - |
| **568**400 | 1 1/4" M | 400 | 1 | - |
| **568**500 | 1 1/4" M | 500 | 1 | - |

## Accessories for expansion vessels



### 5580

Ball shut-off valve, for expansion vessels, with drain cock. **For domestic water system.**

Maximum working pressure: 6 bar
Medium temperature range: 5–85 °C

| Code | Inlet connection | Outlet connection | | |
|---|---|---|---|---|
| **558**050 | 3/4" F | 3/4" F | 1 | 20 |
| **558**060 | 1" F | 1" F | 1 | 20 |
| **558**070 | 1 1/4" F | 1 1/4" F | 1 | 20 |



### 558

Automatic shut-off cock, for expansion vessels. **For domestic water circuit.**

Maximum working pressure: 10 bar
Medium temperature range: 5–110 °C

| Code | Inlet connection | Outlet connection | | |
|---|---|---|---|---|
| **558**500 | 3/4" F | 3/4" M | 1 | 50 |



### 558

Automatic shut-off cock, for expansion vessel, with drain cock. **For domestic water circuit.**

Maximum working pressure: 6 bar
Medium temperature range: 5–85 °C

| Code | Inlet connection | Outlet connection | | |
|---|---|---|---|---|
| **558**510 | 3/4" F | 3/4" M | 1 | 50 |

# CONTROL DEVICES FOR AUTOCLAVES

## Pressure switch and float switch



### 625

Pressure switch for boosting sets and domestic water applications.

Medium temperature range: 0–55 °C
Ambient temperature range: 0–55 °C
Contact rating (up to 500V tripolar): 16 (10) A
Protection class: IP 44

CE

| Code | Connection | Maximum working pressure (bar) | Adjustment pressure range (bar) | | |
|---|---|---|---|---|---|
| **625**005 | 1/4" F | 5 | 1–5 | 1 | 10 |
| **625**010 | 1/4" F | 12 | 3–12 | 1 | 10 |



### 613

Float switch, 250 V 10 A.
Approved for heavy commissioning.

EAC 03

| Code | Probe/cable length (m) | | |
|---|---|---|---|
| **613**030 | 3 | 1 | 5 |
| **613**050 | 5 | 1 | 5 |

# TEMPERATURE REGULATORS, THERMOSTATS AND CHRONO-THERMOSTATS

## Temperature regulators



### 161

Digital regulator with synoptic diagram **for heating and cooling**.
Complete with immersion flow probes with pocket and Pt1000 Ø 6 mm return probe (pocket to be chosen according to the pipe, see accessories).
Optional climatic probe.

Adjustment temperature range: 5–95 °C
Electric supply: 230 V AC
Protection class: IP 20
Probe/cable length: 1,5 m
Control signal: 3 point, 0–10 V

CE

| Code | | |
|---|---|---|
| **161**010 | 1 | - |



### 1520

Digital temperature controller for **heating and cooling**.
Complete with flow probe, outside probe and max. relative humidity probe.

Electric supply: 230 V AC
Running power consumption: 5,5 VA
Protection class: IP 40
Control signal: 3 point

CE

| Code | Notes | | |
|---|---|---|---|
| **1520**21 | 1 channel | 1 | - |



### 1520

Outside compensated digital temperature regulator, **only for heating**.
Complete with contact flow probe and outside probe.

Adjustment temperature range: 20–90 °C
Electric supply: 230 V AC
Protection class: IP 40
Control signal: 3 point

CE

| Code | Notes | | |
|---|---|---|---|
| **1520**01 | 1 channel | 1 | - |
| **1520**02 | 2 channels | 1 | - |
| **1520**03 | 3 channels | 1 | - |

## Accessories for regulator 161010



### 161
Outside temperature probe.

| Code | | |
|---|---|---|
| **161**002 | 1 | - |



### 161
Pressure safety switch.
Complete with cable for wiring.

Medium temperature range: 5–100 °C
Supply cable length: 1 m
Adjustment pressure range: 0,5–10 bar

| Code | | |
|---|---|---|
| **161**003 | 1 | - |



### 161
Dew point detector.

Working range (humidity) UR: 30–100 %

| Code | | |
|---|---|---|
| **161**004 | 1 | - |



### 161
Remote regulator.
Functions:
- translation of the setting curves, from +15 K to -15 K;
- maximum temperature;
- position OFF.

| Code | | |
|---|---|---|
| **161**005 | 1 | - |



### 161
Pt1000 contact probe for pipes, Ø 6 mm.

| Code | Notes | Article use | | |
|---|---|---|---|---|
| **161**012 | L cable 2,5 m | 161010 | 1 | - |



### 161
Pt1000 probe pocket, size 1/2" M.

| Code | Notes | Article use | | |
|---|---|---|---|---|
| **161**013 | L 60 mm | 161010 | 1 | - |
| **161**014 | L 100 mm | 161010, 150006, 257006 | 1 | - |



### 161
Pt1000 probe, Ø6 mm.

| Code | Notes | Article use | | |
|---|---|---|---|---|
| **161**015 | L 20 mm, L cable 1,5 m | 161010 | 1 | - |
| **161**006 | L 45 mm, L cable 2,5 m | 161010 | 1 | - |

## Thermostats



### 620
Room thermostat with changeover switch
16 (2,5) A - 250 V.
Ecodesign Directive Class: I.

Protection class: IP 30

CE

| Code | Notes | | |
|---|---|---|---|
| **620**000 | without warning lamp | 1 | 20 |
| **620**100 | with warning lamp | 1 | 20 |
| **620**110 | with warning lamp ON/OFF switch | 1 | 20 |
| **620**120 | with warning lamp and SUMMER - WINTER switch | 1 | 20 |



### 620
Digital room thermostat with display.
With 5 (3) A switched contact.
ON/OFF function with adjustable differential from 0,2 to 2 °C or proportional.
Two temperature levels + antifreeze.
SUMMER - WINTER control.
Adjustable temperature with 0,1 °C steps.
Ecodesign Directive Class: I

Protection class: IP 30

CE

| Code | Electric supply | | |
|---|---|---|---|
| **620**300 | with battery | 1 | 10 |
| **620**302 | 230 V AC | 1 | 10 |



## 6205

Control bar.
Timer switch input.
Pump outlet control.
SUMMER - WINTER switch input.

Electric supply: 230 V AC
Running power consumption: 5,5 VA
Protection class: IP 30 (with rubber cable gland)
Contact rating on switch-over: 10 A

CE

| Code | Notes | | |
|---|---|---|---|
| **6205**42 | 4 channels | 1 | 8 |
| **6205**82 | 8 channels | 1 | 8 |

## Chrono-thermostats



## 618

Digital chrono-thermostat, with battery supply.
Daily and weekly programming.
Two temperature levels + antifreeze.
Fitted for phone programmer.
30-minute minimum programme.
Output contact: 8 (2) A.
Ecodesign Directive Class: I-IV.

Electric supply: with battery
Protection class: IP 30

CE

| Code | Notes | | |
|---|---|---|---|
| **618**101 | daily | 1 | 10 |
| **618**107 | weekly | 1 | 10 |



## 739

Digital chrono-thermostat, with battery supply.
Weekly programming. Quickly programming.
SUMMER - WINTER switch.
Output contact 5 (2) A.
Ecodesign Directive Class: I-IV

Electric supply: with battery
Protection class: IP 30
Length: 135 mm
Depth: 28 mm
Height: 90 mm

CE

| Code | | |
|---|---|---|
| **739**107 | 1 | 10 |



## 738

Digital room chrono-thermostat with battery electric supply.
Backlit display and navigation via menu.
Weekly programmable clock. Fitted for phone programmer.
3 temperature levels + antifreeze.
30-minute minimum programme.
ON/OFF function with adjustable differential from 0,2 to 2 °C or proportional.
SUMMER - WINTER switch.
Adjustable temperature with 0,1°C steps.
Relais output with changeover switch contact: 5 (3) A / 250 V.
Ecodesign Directive Class: I-IV.

Electric supply: with battery
Protection class: IP 30

CE

| Code | | |
|---|---|---|
| **738**407 | 1 | 10 |



## 738

Digital room chrono-thermostat.
Backlit display and navigation via menu.
Weekly programmable clock.
Fitted for phone programmer.
3 temperature levels + antifreeze.
30-minute minimum programme.
ON/OFF function with adjustable differential from 0,2 to 2 °C or proportional.
SUMMER - WINTER switch.
Adjustable temperature with 0,1°C steps.
Relais output with changeover switch contact: 5 (3) A / 250 V.
Ecodesign Directive Class: I-IV.

Electric supply: 230 V AC
Protection class: IP 30

CE

| Code | | |
|---|---|---|
| **738**427 | 1 | - |

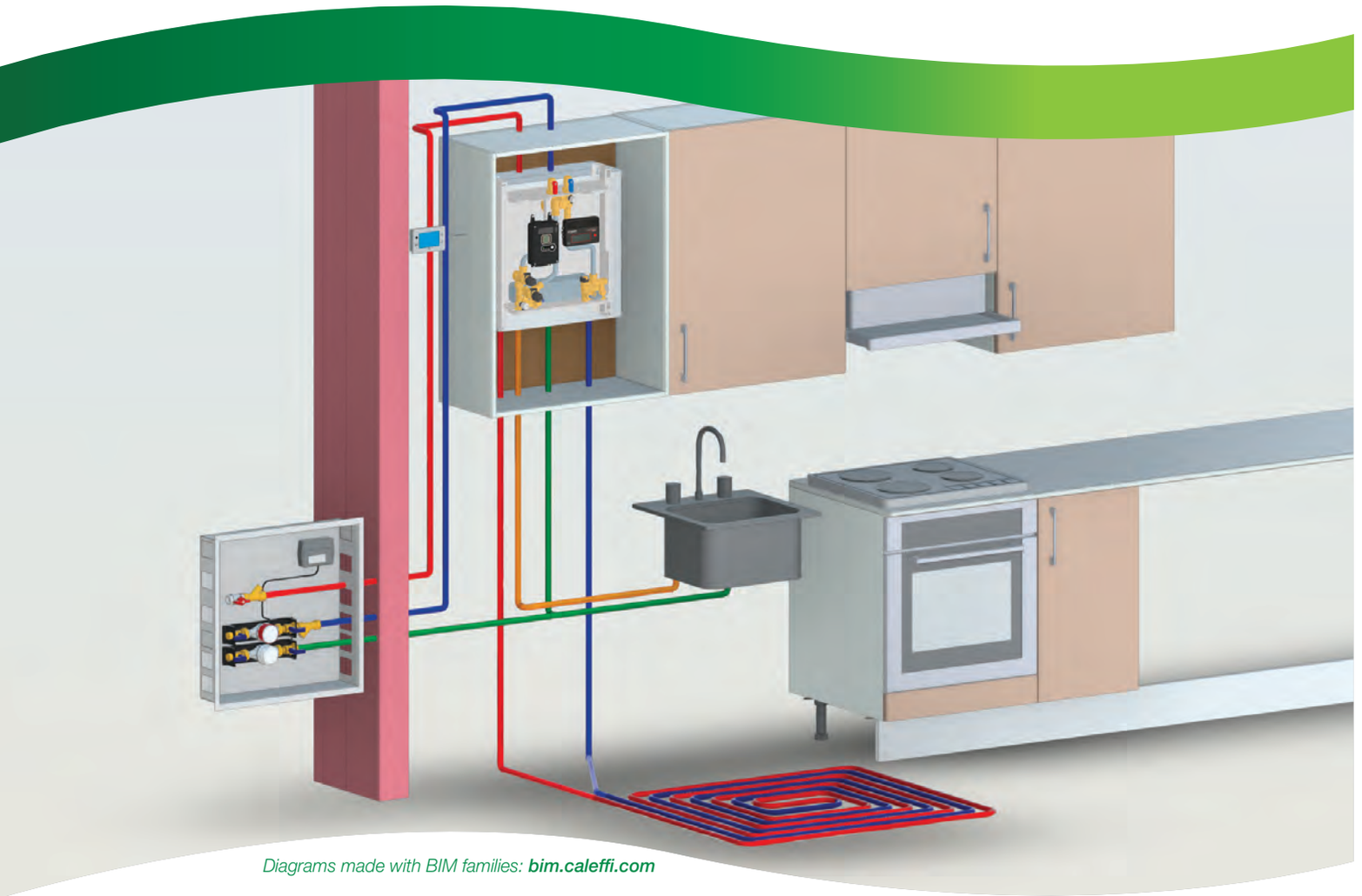

*Diagrams made with BIM families:* ***bim.caleffi.com***

**Compact user modules**
**Compact user modules with dynamic balancing**
**Preassembled user modules for recessed installation**
**Cooling interface unit**
**Supply units suitable for heat metering**
**Wall mounted heat interface units with electronic regulation**
**Wall mounted indirect cooling interface unit**
**Mechanical wall mounted heat interface unit**
**Recess mounted heat interface unit with electronic regulation**
**Heat meters**
**Water meters**

# COMPACT USER MODULES

## PLURIMOD user modules



### 7008 NEW
### PLURIMOD®

Compact user module with heat meter template for heating and cooling systems.
Complete with:
- strainer cartrdige with stainless steel mesh;
- suitable for AUTOFLOW cartridge or static balancing headwork;
- 2 way ball zone valve;
- thermoelectric actuator with auxiliary microswitch;
- copper template for heat meter.

For use in installations with inlet on both the left- and right-hand side of the box (factory setting with inlet left-hand side).

Nominal pressure: PN 10

| Code | Electric supply | | |
|---|---|---|---|
| **7008**15 001 | 230 V AC | 1 | - |
| **7008**16 001 | 24 V AC | 1 | - |



### 7008 NEW

Spare technopolymer AUTOFLOW cartridge.
Suitable for PLUIRIMOD user modules.

| Code | Nominal flow rate ($m^3/h$) | | |
|---|---|---|---|
| 700875 M12 | 0,12 | 1 | - |
| 700875 M15 | 0,15 | 1 | - |
| 700875 M20 | 0,20 | 1 | - |
| 700875 M25 | 0,25 | 1 | - |
| 700875 M30 | 0,30 | 1 | - |
| 700875 M35 | 0,35 | 1 | - |
| 700875 M40 | 0,40 | 1 | - |
| 700875 M50 | 0,50 | 1 | - |
| 700875 M60 | 0,60 | 1 | - |
| 700875 M70 | 0,70 | 1 | - |
| 700875 M80 | 0,80 | 1 | - |
| 700875 M90 | 0,90 | 1 | - |
| 700875 1M0 | 1,00 | 1 | - |
| 700875 1M2 | 1,20 | 1 | - |
| 700875 1M4 | 1,40 | 1 | - |
| 700875 1M6 | 1,60 | 1 | - |



### 7008 NEW

Headwork for static balancing.
Suitable for PLURIMOD user modules.

| Code | | | |
|---|---|---|---|
| **7008**01 | | 1 | - |

## PLURIMOD EASY self-balanced user modules



### 7002
### PLURIMOD® EASY

Compact user module with heat meter template.
Complete with:
- strainer cartrdige with stainless steel mesh;
- Fixed setting pressure differential control valve;
- 2 way valve with presetting;
- thermoelectric actuator with auxiliary microswitch;
- copper template for heat meter.

| Code | Electric supply | Max. recommended flow rate (l/h) | Differential pressure fixed setting (kPa) | | |
|---|---|---|---|---|---|
| **7002**15 001 | 230 V AC | 600 | 15 | 1 | 2 |
| **7002**16 001 | 24 V AC | 600 | 15 | 1 | 2 |
| **7002**17 001 | 230 V AC | 900 | 20 | 1 | 2 |
| **7002**18 001 | 24 V AC | 900 | 20 | 1 | 2 |
| **7002**19 001 | 230 V AC | 1400 | 30 | 1 | 2 |
| **7002**20 001 | 24 V AC | 1400 | 30 | 1 | 2 |

## Installation templates



### 7000 NEW

Recessed box for PLURIMOD® and PLURIMOD EASY® user modules.
Complete with:
- painted door for interior installation;
- technopolymer mounting bracket with thermal break;
- full insulation in PPE;
- 2 pairs of ball shut-off valves;
- 2 technopolymer flushing pipes (T max. 55 °C);
- 2 positioning hooks for 7000 series domestic water outlets.

Height: 480 mm
Width: 480 mm
Depth: 130–160 mm

| Code | Connection | | |
|---|---|---|---|
| **700000** | 3/4" M | 1 | - |



### 7000 NEW

Wall hanging steel plate for PLURIMOD® and PLURIMOD® EASY user modules.
Complete with:
- painted door for interior installation;
- technopolymer mounting bracket with thermal break;
- full insulation in PPE;
- 2 pairs of ball shut-off valves;
- 2 technopolymer flushing pipes (T max. 55 °C);
- 3 positioning hooks for 7000 series domestic water outlets.

Height: 610 mm
Width: 480 mm

| Code | Connection | | |
|---|---|---|---|
| **700000** 003 | 3/4" M | 1 | - |



### 7000 NEW

Template for PLURIMOD® and PLURIMOD EASY® user modules.
Complete with:
- painted door for interior installation;
- technopolymer mounting bracket with thermal break;
- full insulation in PPE;
- 2 pairs of ball shut-off valves;
- 2 technopolymer flushing pipes (T max. 55 °C).

| Code | Connection | | |
|---|---|---|---|
| **700000** 002 | 3/4" M | 1 | - |



### 7000

Recessed box with painted door for interior installation.
5 positioning hooks.

Height: 550 mm
Width: 550 mm
Depth: 120–150 mm

| Code | | |
|---|---|---|
| **700024** | 1 | - |



### 7000

Recessed box with painted door for interior installation.
12 positioning hooks.

Height: 1175 mm
Width: 550 mm
Depth: 140–180 mm

| Code | Notes | | |
|---|---|---|---|
| **700025** | | 1 | - |



### 7000

Template for domestic water meter.
Complete with:
- BALLSTOP ball shut-off valve with check valve;
- water meter;
- ball shut-off valve with male terminal;
- technopolymer flushing pipe;
- mounting bracket.

Medium: domestic water
Permanent flow rate (Domestic water circuit) (Q3): 4,0 $m^3/h$
Nominal pressure: PN 16

ATTESTATION DE CONFORMITÉ SANITAIRE ACS 2014/32/UE (MI001)

| Code | Connection | Notes | Medium temperature range (°C) | Pulse weight | | |
|---|---|---|---|---|---|---|
| **700050** | 3/4" M | DHW | 30–90 | - | 1 | - |
| **700051** | 3/4" M | DHW | 30–90 | 10 l/pulse | 1 | - |
| **700052** | 3/4" M | DCW | 0–50 | - | 1 | - |
| **700053** | 3/4" M | DCW | 0–50 | 10 l/pulse | 1 | - |



### 7000

Template for domestic water meter.
**For 7942 series meter, 3/4" connections**.
Complete with:
- BALLSTOP ball shut-off valve with check valve (inlet);
- ball shut-off valve (outlet);
- technopolymer flushing pipe template;
- mounting bracket.

Medium temperature range: 5–55 °C

| Code | Connection | | |
|---|---|---|---|
| **700009** | 3/4" M | 1 | - |

## Completion elements - single user with manifold



### 70028

Recessed box for PLURIMOD® and PLURIMOD® EASY.
Complete with:
- **couple of manifolds 664 series (2–8 connections) for fan coil systems**;
- painted door for interior use;
- composite mounting bracket with thermal break;
- complete PPE insulation;
- 2 pairs of ball shut-off valves;
- 2 technopolymer flushing pipes (T max. 55 °C);
- 2 positioning hooks for 7000 series domestic water outlets with condensation collection tank.

For use in installations with inlet on both the left- and right-hand side of the box (factory setting with inlet left-hand side).

Height: 866 mm
Width: 600 mm
Depth: 140–180 mm

| Code | Connection | Outlet connection | | |
|---|---|---|---|---|
| **70028**B | 3/4" M | 3/4" M - 2 out. | 1 | - |
| **70028**C | 3/4" M | 3/4" M - 3 out. | 1 | - |
| **70028**D | 3/4" M | 3/4" M - 4 out. | 1 | - |
| **70028**E | 3/4" M | 3/4" M - 5 out. | 1 | - |
| **70028**F | 3/4" M | 3/4" M - 6 out. | 1 | - |
| **70028**G | 3/4" M | 3/4" M - 7 out. | 1 | - |
| **70028**H | 3/4" M | 3/4" M - 8 out. | 1 | - |



### 70026

Recessed box for PLURIMOD® and PLURIMOD® EASY.
Complete with:
- **couple of manifolds 664 series (2–8 connections) for fan coil systems**;
- painted door for interior use;
- composite mounting bracket with thermal break;
- complete PPE insulation;
- 2 pairs of ball shut-off valves;
- 2 technopolymer flushing pipes (T max. 55 °C);
- 2 positioning hooks for 7000 series domestic water outlets with condensation collection tank.

For use in installations with inlet on both the left- and right-hand side of the box (factory setting with inlet left-hand side).

Height: 866 mm
Width: 600 mm
Depth: 140–180 mm

| Code | Connection | Outlet connection | | |
|---|---|---|---|---|
| **70026**B | 3/4" M | 3/4" M - 2 out. | 1 | - |
| **70026**C | 3/4" M | 3/4" M - 3 out. | 1 | - |
| **70026**D | 3/4" M | 3/4" M - 4 out. | 1 | - |
| **70026**E | 3/4" M | 3/4" M - 5 out. | 1 | - |
| **70026**F | 3/4" M | 3/4" M - 6 out. | 1 | - |
| **70026**G | 3/4" M | 3/4" M - 7 out. | 1 | - |
| **70026**H | 3/4" M | 3/4" M - 8 out. | 1 | - |

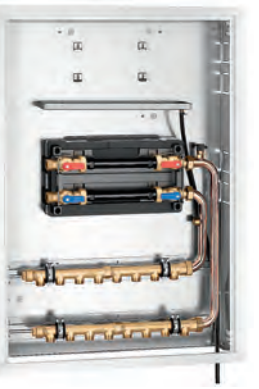

### 70029

Recessed box for PLURIMOD® and PLURIMOD® EASY.
Complete with:
- **couple of manifolds 664 series (2–8 connections) for fan coil systems**;
- painted door for interior use;
- composite mounting bracket with thermal break;
- complete PPE insulation;
- 2 pairs of ball shut-off valves;
- 2 technopolymer flushing pipes (T max. 55 °C);
- 2 positioning hooks for 7000 series domestic water outlets with condensation collection tank.

For use in installations with inlet on both the left- and right-hand side of the box (basic inlet left-hand side).

Height: 866 mm
Width: 600 mm
Depth: 140–180 mm

| Code | Connection | Outlet connection | | |
|---|---|---|---|---|
| **70029**B | 3/4" M | 23 p. 1,5 - 2 out. | 1 | - |
| **70029**C | 3/4" M | 23 p. 1,5 - 3 out. | 1 | - |
| **70029**D | 3/4" M | 23 p. 1,5 - 4 out. | 1 | - |
| **70029**E | 3/4" M | 23 p. 1,5 - 5 out. | 1 | - |
| **70029**F | 3/4" M | 23 p. 1,5 - 6 out. | 1 | - |
| **70029**G | 3/4" M | 23 p. 1,5 - 7 out. | 1 | - |
| **70029**H | 3/4" M | 23 p. 1,5 - 8 out. | 1 | - |

# COMPACT USER MODULES WITH DYNAMIC BALANCING

## PLURIMOD XM user modules



### 7004
### PLURIMOD XM

Self balanced user module.
Complete with:
- 2 pairs of 3/4" M ball valves;
- differential pressure control valve with presetting;
- technopolymer template for flow meter;
- inspectable strainer with probe connection;
- technopolymer mounting bracket with thermal break;
- first flushing strainer;
- PPE full insulation.

To be coupled with thermo-elettric actuators 6565/6566 series.
**With insulation**.

| Code | Flow rate working range ($m^3/h$) | | |
|---|---|---|---|
| **7004**75 002 | 0,04–0,34 | 1 | - |
| **7004**85 002 | 0,20–1,05 | 1 | - |

## Compact user modules with automatic flow rate control



### 7002

User module with heat meter template.
Complete with:
- 2 pairs of 3/4" M ball valves;
- pressure independent control valve with presetting;
- technopolymer template for flow meter (T max. 55 °C);
- inspectable strainer with probe connection;
- technopolymer mounting bracket.

To be coupled with thermo-electric actuators 6565/6566 series.

Medium temperature range: 3–90 °C

| Code | Flow rate regulation ($m^3/h$) | | |
|---|---|---|---|
| **7002**55 H20 | 0,02–0,20 | 1 | - |
| **7002**55 H40 | 0,08–0,40 | 1 | - |
| **7002**55 1H2 | 0,12–1,20 | 1 | - |

## Actuators



### 6565

Thermo-electric actuator for FLOWMATIC 145 series control valve and 149 series kit.
Quick-coupling installation with fixing clip adaptor.
Normally closed.

Ambient temperature range: 0–60 °C
Running power consumption: 1 W
Protection class: IP 54
Supply cable length: 1 m
Control signal: ON/OFF

CE

| Code | Electric supply | | |
|---|---|---|---|
| **6565**02 | 230 V AC | 1 | 100 |
| **6565**04 | 24 V AC/DC | 1 | 100 |



### 6566

Thermo-electric actuator.
For FLOWMATIC 145 series control valve, 149 series kit, user modules 7002 and 7004 series.
Quick-coupling installation with fixing clip adaptor.
Normally open.

Ambient temperature range: 0–60 °C
Running power consumption: 1 W
Protection class: IP 54
Supply cable length: 1 m
Control signal: ON/OFF

CE

| Code | Electric supply | | |
|---|---|---|---|
| **6566**02 | 230 V AC | 1 | 100 |
| **6566**04 | 24 V AC/DC | 1 | 100 |

# PREASSEMBLED USER MODULES FOR RECESSED INSTALLATION

## 2-way valve user modules

### 7992

Pre-assembled user module with two-way zone valve for heating and cooling systems (*).
Complete with:
- galvanized sheet metal box;
- painted door for interior use;
- 2 pairs of ball shut-off valves;
- two-way ball zone valve;
- actuator with auxiliary microswitch (24V AC on request);
- pair of end fittings complete with automatic air vent;
- suitable for AUTOFLOW cartridge 126 series;
- suitable for CONTECA EASY heat meter 7504G e 7507G series;
- 2 positioning hooks for domestic water outlets.

Height: 650 mm
Depth: 110–140 mm
Electric supply: 230 V AC



| Code | Main connection | Outlet connection | Width (mm) | | |
|---|---|---|---|---|---|
| **799**250 | 3/4" F | - | 600 | 1 | - |
| **799**25B | 3/4" F | 23 p. 1,5 - 2 out. | 800 | 1 | - |
| **799**25C | 3/4" F | 23 p. 1,5 - 3 out. | 800 | 1 | - |
| **799**25D | 3/4" F | 23 p. 1,5 - 4 out. | 800 | 1 | - |
| **799**25E | 3/4" F | 23 p. 1,5 - 5 out. | 800 | 1 | - |
| **799**25F | 3/4" F | 23 p. 1,5 - 6 out. | 1000 | 1 | - |
| **799**25G | 3/4" F | 23 p. 1,5 - 7 out. | 1000 | 1 | - |
| **799**25H | 3/4" F | 23 p. 1,5 - 8 out. | 1000 | 1 | - |
| **799**260 | 1" F | - | 600 | 1 | - |
| **799**26C | 1" F | 23 p. 1,5 - 3 out. | 800 | 1 | - |
| **799**26D | 1" F | 23 p. 1,5 - 4 out. | 800 | 1 | - |
| **799**26E | 1" F | 23 p. 1,5 - 5 out. | 1000 | 1 | - |
| **799**26F | 1" F | 23 p. 1,5 - 6 out. | 1000 | 1 | - |
| **799**26G | 1" F | 23 p. 1,5 - 7 out. | 1000 | 1 | - |
| **799**26H | 1" F | 23 p. 1,5 - 8 out. | 1200 | 1 | - |
| **799**26I | 1" F | 23 p. 1,5 - 9 out. | 1200 | 1 | - |
| **799**26L | 1" F | 23 p. 1,5 - 10 out. | 1200 | 1 | - |
| **799**270 | 1 1/4" F | - | 800 | 1 | - |
| **799**27C | 1 1/4" F | 3/4" M - 3 out. | 1000 | 1 | - |
| **799**27D | 1 1/4" F | 3/4" M - 4 out. | 1000 | 1 | - |
| **799**27E | 1 1/4" F | 3/4" M - 5 out. | 1000 | 1 | - |
| **799**27F | 1 1/4" F | 3/4" M - 6 out. | 1200 | 1 | - |
| **799**27G | 1 1/4" F | 3/4" M - 7 out. | 1200 | 1 | - |
| **799**27H | 1 1/4" F | 3/4" M - 8 out. | 1200 | 1 | - |

For optional Autoflow cartridges see page 311

## 3-way valve user modules

### 796

Pre-assembled user module with three-way zone valve for heating and cooling systems (*).
Complete with:
- galvanized sheet metal box;
- painted door for interior use;
- 2 pairs of ball shut-off valves;
- three-way ball zone valve;
- actuator with auxiliary microswitch (24V AC on request);
- pair of end fittings complete with automatic air vent;
- suitable for CONTECA EASY heat meter 7504G e 7507G series;
- 2 positioning hooks for domestic water outlets.

Height: 650 mm
Depth: 110–140 mm
Electric supply: 230 V AC

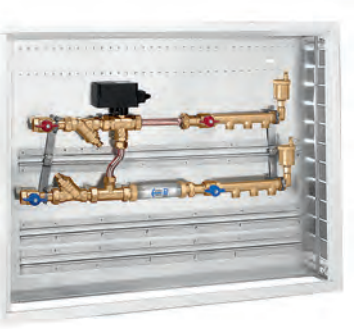

| Code | Main connection | Outlet connection | Width (mm) | | |
|---|---|---|---|---|---|
| **796**560 | 3/4" F | - | 600 | 1 | - |
| **796**58B | 3/4" F | 23 p. 1,5 - 2 out. | 800 | 1 | - |
| **796**58C | 3/4" F | 23 p. 1,5 - 3 out. | 800 | 1 | - |
| **796**58D | 3/4" F | 23 p. 1,5 - 4 out. | 800 | 1 | - |
| **796**58E | 3/4" F | 23 p. 1,5 - 5 out. | 1000 | 1 | - |
| **796**58F | 3/4" F | 23 p. 1,5 - 6 out. | 1000 | 1 | - |
| **796**51G | 3/4" F | 23 p. 1,5 - 7 out. | 1000 | 1 | - |
| **796**51H | 3/4" F | 23 p. 1,5 - 8 out. | 1000 | 1 | - |
| **796**680 | 1" F | - | 800 | 1 | - |
| **796**61C | 1" F | 23 p. 1,5 - 3 out. | 1000 | 1 | - |
| **796**61D | 1" F | 23 p. 1,5 - 4 out. | 1000 | 1 | - |
| **796**61E | 1" F | 23 p. 1,5 - 5 out. | 1000 | 1 | - |
| **796**61F | 1" F | 23 p. 1,5 - 6 out. | 1200 | 1 | - |
| **796**62G | 1" F | 23 p. 1,5 - 7 out. | 1200 | 1 | - |
| **796**62H | 1" F | 23 p. 1,5 - 8 out. | 1200 | 1 | - |
| **796**62I | 1" F | 23 p. 1,5 - 9 out. | 1200 | 1 | - |
| **796**780 | 1 1/4" F | - | 800 | 1 | - |
| **796**71C | 1 1/4" F | 3/4" M - 3 out. | 1000 | 1 | - |
| **796**71D | 1 1/4" F | 3/4" M - 4 out. | 1200 | 1 | - |
| **796**72E | 1 1/4" F | 3/4" M - 5 out. | 1200 | 1 | - |
| **796**72F | 1 1/4" F | 3/4" M - 6 out. | 1200 | 1 | - |

Note (*): consider 798 series insulation available as a completing element.

## Completion elements



### 798

Insulation for user modules.

| Code | Notes | | |
|---|---|---|---|
| **798**205 | 3/4" - 2 way 7992, 7900 series | 1 | - |
| **798**206 | 1" - 2 way 7992, 7900 series | 1 | - |
| **798**207 | 1 1/4" - 2 way 7992, 7900 series | 1 | - |
| **798**305 | 3/4" - 3 way 796, 7900 series | 1 | - |
| **798**306 | 1" - 3 way 796, 7900 series | 1 | - |
| **798**307 | 1 1/4" - 3 way 796, 7900 series | 1 | - |



### 798

Insulation for pair of manifolds.
Max 8 ports.
For 796 and 7992 series.

| Code | Notes | | |
|---|---|---|---|
| **798**015 | 3/4" | 1 | - |
| **798**016 | 1" | 1 | - |
| **798**017 | 1 1/4" | 1 | - |



### 7941

Template for domestic water meter.
Complete with:
- ball shut-off valve with built-in check valve BALLSTOP;
- flow meter with pulse output;
- shut-off ball valve (outlet);
- fixing collars.

Medium: domestic water
Pulse weight: 10 l/pulse
Nominal pressure: PN 16

2014/32/UE (MI001)

| Code | Inlet connection | Outlet connection | Notes | Medium temperature range (°C) | Permanent flow rate (DW) (Q3) ($m^3/h$) | | |
|---|---|---|---|---|---|---|---|
| **7941**40 | 1/2" F | 1/2" M | DCW | 0–50 | 2,5 | 1 | - |
| **7941**41 | 1/2" F | 1/2" M | DCW | 30–90 | 2,5 | 1 | - |
| **7941**50 | 3/4" F | 3/4" M | DCW | 0–50 | 4,0 | 1 | - |
| **7941**51 | 3/4" F | 3/4" M | DCW | 30–90 | 4,0 | 1 | - |

**Autoflow cartridge for user module 7992 and 7900 series**

*See page 253 section 8 (126 series cartridges)*

| $m^3/h$ | 3/4" | 1" | 1 1/4" |
|---|---|---|---|
| **0,30** | **02**M30 XXX | | |
| **0,40** | **02**M40 XXX | | |
| **0,50** | **02**M50 XXX | | |
| **0,60** | **02**M60 XXX | **02**M60 XXC | |
| **0,70** | **02**M70 XXX | **02**M70 XXC | |
| **0,80** | **02**M80 XXX | **02**M80 XXC | |
| **0,90** | **02**M90 XXX | **02**M90 XXC | |
| **1,00** | **02**1M0 XXX | **02**1M0 XXC | |
| **1,20** | **02**1M2 XXX | **02**1M2 XXC | |
| **1,40** | **02**1M4 XXX | **02**1M4 XXC | |
| **1,60** | | **02**1M6 XXC | |
| **1,80** | | **04**1M8 XXC | |
| **2,00** | | **04**2M0 XXC | |
| **2,25** | | **04**2M2 XXC | |
| **2,50** | | | **04**2M5 XXC |
| **2,75** | | | **04**2M7 XXC |
| **3,00** | | | **04**3M0 XXC |
| **3,25** | | | **04**3M2 XXC |
| **3,50** | | | **04**3M5 XXC |

# COOLING INTERFACE UNIT

## Cooling interface unit



### 797

Wall-hanging cooling interface unit.
Complete with:
- pressure independant control valve;
- electro-thermic actuator;
- plate heat exchanger;
- high efficiency pump;
- 5 L expansion vessel;
- safety relief valve (3 bar setting);
- suitable for CONTECA EASY codes 750405G or 750705G heat meters, with 755810 option.

**With insulation**.

Maximum working pressure: 16 bar
Medium temperature range: 3–85 °C
Electric supply: 230 V AC
Maximum percentage of glycol: 30 %
Medium: water, glycol solutions
Height: 780 mm
Width: 480 mm
Depth: 220 mm
△p max.: 4 bar

| Code | Connection | Nominal heat exchanger capacity (kW) | | |
|---|---|---|---|---|
| **797**601 | 1″M | 3 | 1 | - |
| **797**603 | 1″M | 8 | 1 | - |
| **797**605 | 1″M | 15 | 1 | - |

# SUPPLY UNITS SUITABLE FOR HEAT METERING

## Direct supply units



### 765

Direct supply unit DN 25 for heating and cooling systems.
Factory configuration: upstream flow - supply on the RH side.
Complete with:
- high efficiency pump;
- designed for the installation of CONTECA EASY code 750405G or 750705G heat meters.

RH to LH Convertible.
**With insulation**.

Maximum working pressure: 10 bar
Medium temperature range: 5–90 °C
Electric supply: 230 V AC
Outlet centre distance: 125 mm
Flow rate with available head 4 m.c.a.: 2,5 $m^3/h$
Type of pump: Para 25-9

CE

| Code | Boiler side connection | System side connection | | |
|---|---|---|---|---|
| **765**600HE | 1 1/2″ M | 1″ F | 1 | - |

## Motorised regulating units



### 767

Motorised regulating unit DN 25, for heating and cooling systems.
Factory configuration: upstream flow - supply on the RH side.
Complete with:
- high-efficiency pump;
- motorised mixing valve;
- designed for heat meter installation CONTECA EASY codes 750405G or 750705G.

RH to LH Convertible.
**With insulation**.
**With auxiliary microswitch**.

Maximum working pressure: 10 bar
Medium temperature range: 5–90 °C
Outlet centre distance: 125 mm
Flow rate with available head 4 m.c.a.: 2,2 $m^3/h$
Type of pump: Para 25-9

CE

| Code | Boiler side connection | System side connection | Electric supply | Control signal | | |
|---|---|---|---|---|---|---|
| **767**662HE2 | 1 1/2″ M | 1″ F | 230 V AC | 3 point | 1 | - |
| **767**664HE2 | 1 1/2″ M | 1″ F | 24 V AC/DC | 0–10 V | 1 | - |

## Thermostatic regulating units



### 766

Thermostatic regulating unit DN 25 for heating systems.
Factory configuration: upstream flow - supply on the RH side.
Complete with:
- high efficiency pump;
- designed for the installation of CONTECA EASY code 750405G or 750705G heat meters.

RH to LH Convertible.
**With insulation**.

Maximum working pressure: 10 bar
Medium temperature range: 5–90 °C
Adjustment temperature range: 25–50 °C
Electric supply: 230 V AC
Outlet centre distance: 125 mm
Flow rate with available head 4 m.c.a.: 2,1 $m^3/h$
Type of pump: Para 25-9

CE

| Code | Boiler side connection | System side connection | | |
|---|---|---|---|---|
| **766**600HE | 1 1/2″ M | 1″ F | 1 | - |

# WALL MOUNTED HEAT INTERFACE UNITS WITH ELECTRONIC REGULATION

## Direct heat interface unit with advanced electronic regulation

### SATK22

Electronic wall-hanging HIU **for low temperature heating system**.
Complete with:
- differential pressure control valve;
- modulating control valves;
- thermal safety thermostat and valve;
- high efficiency pump (primary circuit);
- plate heat excganger (DHW circuit);
- user interface with chronothermostat option;
- suitable to CONTECA EASY 7504K and 7507K series heat meters.

Main electronic functions:
- DHW exchanger preheating programmable on hourly base;
- primary flow limitation;
- outside compensated temperature regulation.

**With insulation**.

Maximum working pressure: 10 bar
△p max.: 6 bar
Primary inlet working temperature range: 2–90 °C
Adjustment temperature range: 25–45 °C
Adjustment temperature range (DHW): 42–60 °C
Maximum DHW instantaneous production: 24 l/min
Electric supply: 230 V AC
Running power consumption: 80 W
Height: 500 mm
Width: 490 mm
Depth: 245 mm



| Code | Notes | Nominal heat exchanger capacity | | |
|---|---|---|---|---|
| **SATK22**103 | - | 50 kW | 1 | - |
| **SATK22**105 | - | 60 kW | 1 | - |
| **SATK22**107 | for systems with low primary temperature | - | 1 | - |

### SATK22

Electronic wall-hanging HIU **for medium temperature heating system**.
Complete with:
- differential pressure control valve;
- modulating control valves;
- high efficiency pump (primary circuit);
- plate heat excganger (DHW circuit);
- user interface with chronothermostat option;
- suitable to CONTECA EASY 7504K and 7507K series heat meters.

Main electronic functions:
- DHW exchanger preheating programmable on hourly base;
- primary flow limitation;
- outside compensated temperature regulation.

**With insulation**.

Maximum working pressure: 10 bar
△p max.: 6 bar
Primary inlet working temperature range: 2–90 °C
Adjustment temperature range: 45–75 °C
Adjustment temperature range (DHW): 42–60 °C
Maximum DHW instantaneous production: 24 l/min
Electric supply: 230 V AC
Running power consumption: 80 W
Height: 500 mm
Width: 490 mm
Depth: 245 mm



| Code | Notes | Nominal heat exchanger capacity | | |
|---|---|---|---|---|
| **SATK22**203 | - | 50 kW | 1 | - |
| **SATK22**205 | - | 60 kW | 1 | - |
| **SATK22**207 | for systems with low primary temperature | - | 1 | - |

**Hydraulic diagram SATK22 - LOW temperature**

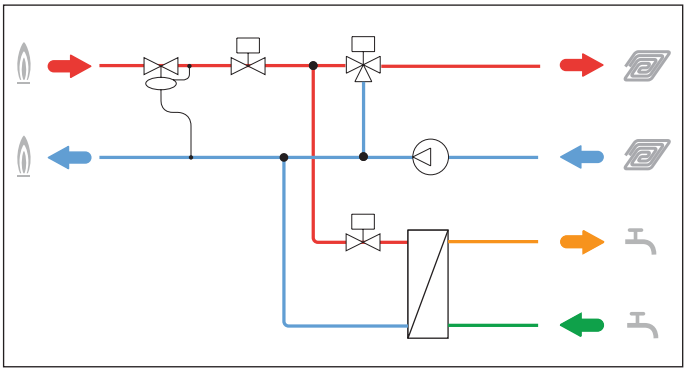

**Hydraulic diagram SATK22 - MEDIUM temperature**

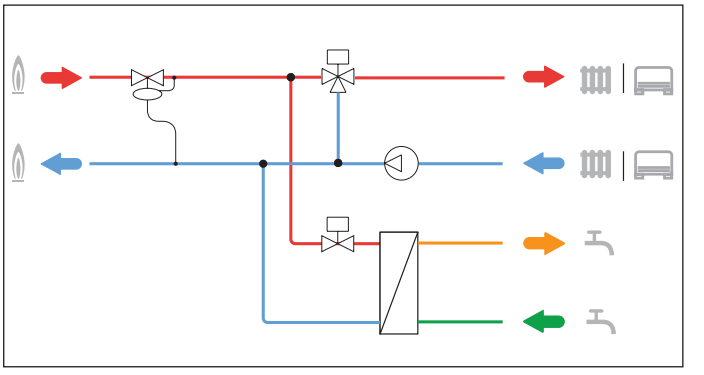

## SATK22

Electronic wall-hanging HIU **for high temperature heating system**.
Complete with:
- differential pressure control valve;
- modulating control valves;
- plate heat excganger (DHW circuit);
- user interface with chronothermostat option;
- suitable to CONTECA EASY 7504K and 7507K series heat meters.

Main electronic functions:
- DHW exchanger preheating programmable on hourly base;
- primary flow limitation;
- outside compensated temperature regulation.

**With insulation**.

Maximum working pressure: 10 bar
△p max.: 6 bar
Primary inlet working temperature range: 2–90 °C
Adjustment temperature range (DHW): 42–60 °C
Maximum DHW instantaneous production: 24 l/min
Electric supply: 230 V AC
Running power consumption: 20 W
Height: 500 mm
Width: 490 mm
Depth: 245 mm



| Code | Notes | Nominal heat exchanger capacity | | |
|---|---|---|---|---|
| **SATK22**303 | - | 50 kW | 1 | - |
| **SATK22**305 | - | 60 kW | 1 | - |
| **SATK22**307 | for systems with low primary temperature | - | 1 | - |

## SATK22

Electronic wall-hanging HIU **for high temperature heating system with primary pump**.
Complete with:
- differential pressure control valve;
- modulating control valves;
- high efficiency pump (primary circuit);
- plate heat excganger (DHW circuit);
- user interface with chronothermostat option;
- suitable to CONTECA EASY 7504K and 7507K series heat meters.

Main electronic functions:
- DHW exchanger preheating programmable on hourly base;
- primary flow limitation;
- outside compensated temperature regulation.

**With insulation**.

Maximum working pressure: 10 bar
△p max.: 6 bar
Primary inlet working temperature range: 2–90 °C
Adjustment temperature range (DHW): 42–60 °C
Maximum DHW instantaneous production: 24 l/min
Electric supply: 230 V AC
Running power consumption: 80 W
Height: 500 mm
Width: 490 mm
Depth: 245 mm



| Code | Notes | Nominal heat exchanger capacity | | |
|---|---|---|---|---|
| **SATK22**403 | - | 50 kW | 1 | - |
| **SATK22**405 | - | 60 kW | 1 | - |
| **SATK22**407 | for systems with low primary temperature | - | 1 | - |

**Hydraulic diagram SATK22 - HIGH temperature**

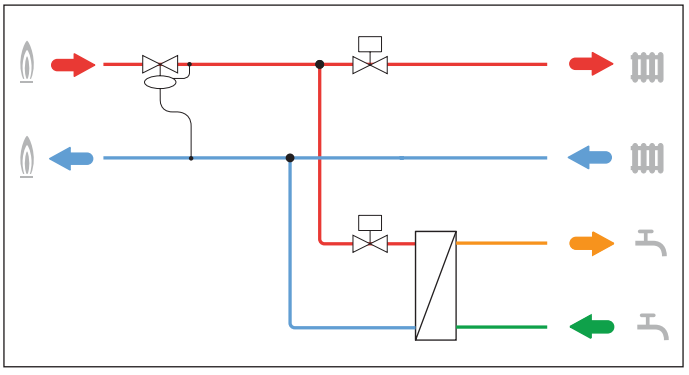

**Hydraulic diagram SATK22 - HIGH temperature, with booster pump**

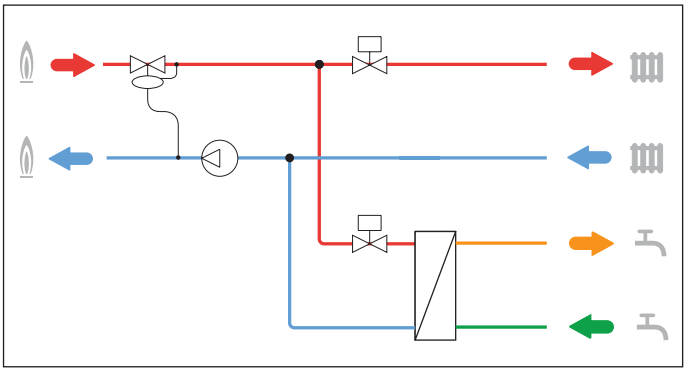

# Indirect heat interface unit with advanced electronic regulation

## SATK32

Electronic wall-hanging HIU **with hydraulic separation**.
Complete with:
- differential pressure control valve;
- modulating control valves;
- thermal safety thermostat;
- high efficiency pump (heating circuit);
- plate heat excganger (DHW circuit);
- plate heat excganger (heating circuit);
- 7 L expansion vessel;
- safety relief valve (3 bar setting);
- automatic filling unit with CB type backflow preventer;
- suitable to CONTECA EASY 7504K and 7507K series heat meters.

Main electronic functions:
- DHW exchanger preheating programmable on hourly base;
- return temperature control;
- primary flow limitation;
- outside compensated temperature regulation.

**With insulation**.

Maximum working pressure: 16 bar
△p max.: 6 bar
Primary inlet working temperature range: 2–90 °C
Adjustment temperature range: 45–75 °C
Adjustment temperature range (DHW): 42–60 °C
Maximum DHW instantaneous production: 24 l/min
Electric supply: 230 V AC
Running power consumption: 80 W
Height: 630 mm
Width: 490 mm
Depth: 245 mm



| Code | Notes | Nominal heat exchanger capacity | | |
|---|---|---|---|---|
| **SATK32**103 | - | 50 kW | 1 | - |
| **SATK32**105 | - | 60 kW | 1 | - |
| **SATK32**107 | for systems with low primary temperature | - | 1 | - |

**Hydraulic diagram SATK32**

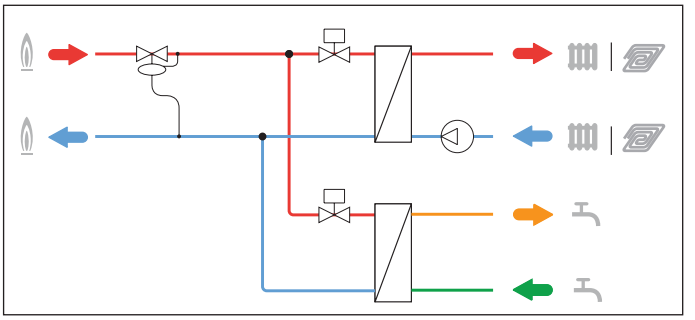

# Completion codes for heat interface units with advanced electronic regulation



## 572

Filling loop with CB type backflow preventer.

| Code | Article use | | |
|---|---|---|---|
| **572**120 | SATK32103, SATK32105, SATK32107 | 1 | 10 |



## 789

Mounting template with shut-off valve.
For SATK22 - SATK32 series.

| Code | Connection | | |
|---|---|---|---|
| **789**023 | 3/4" M | 1 | - |



## 789

Insulation for code 789023.
Material: closed cell expanded PE-X.
Minimum thickness: 10 mm
Reaction to fire (DIN 4102): B2 class.

| Code | Article use | | |
|---|---|---|---|
| **789**332 | 789023 | 10 | - |



## 789

System flushing valve with shut-off by-pass.
For SATK22 - SATK32 series.

| Code | Connection | | |
|---|---|---|---|
| **789**110 | 3/4" M | 1 | 25 |



## 789

Insulation for code 789110.
Material: closed cell expanded PE-X.
Minimum thickness: 10 mm
Reaction to fire (DIN 4102): B2 class.

| Code | Article use | | |
|---|---|---|---|
| **789**301 | 789110 | 10 | - |



## 789

Outside temperature probe for SATK22 and SATK32.
For SATK22 and SATK32 series.

| Code | | | |
|---|---|---|---|
| **789**833 | | 1 | 10 |



## 789

Drain conveyor pipe for SATK32.

| Code | Article use | | |
|---|---|---|---|
| **789**832 | SATK32103, SATK32105, SATK32107 | 1 | 30 |

# Direct heat interface unit with basic electronic regulation

## SATK20

Mechanical wall-hanging HIU **for low temperature heating system**.
Complete with:
- modulating control valves;
- thermal safety thermostat and valve;
- high efficiency pump (heating circuit);
- plate heat excganger (DHW circuit);
- PPE insulation cover;
- suitable to CONTECA EASY 7504K and 7507K series heat meters.

Main electronic functions:
- DHW exchanger preheating;
- compensated set point regulation.

Maximum working pressure: 10 bar
△p max.: 0,9 bar
Primary inlet working temperature range: 2–85 °C
Adjustment temperature range: 25–45 °C
Adjustment temperature range (DHW): 42–60 °C
Maximum DHW instantaneous production: 18 l/min
Electric supply: 230 V AC
Running power consumption: 80 W
Height: 550 mm
Width: 450 mm
Depth: 265 mm



| Code | Nominal heat exchanger capacity (kW) | | |
|---|---|---|---|
| **SATK20**103HE | 40 | 1 | - |

## SATK20

Electronic wall-hanging HIU **for medium temperature heating system**.
Complete with:
- modulating control valves;
- high efficiency pump (heating circuit);
- plate heat excganger (DHW circuit);
- PPE insulation cover;
- suitable to CONTECA EASY 7504K and 7507K series heat meters.

Main electronic functions:
- DHW exchanger preheating;
- compensated set point regulation.

Maximum working pressure: 10 bar
△p max.: 0,9 bar
Primary inlet working temperature range: 2–85 °C
Adjustment temperature range: 45–75 °C
Adjustment temperature range (DHW): 42–60 °C
Maximum DHW instantaneous production: 18 l/min
Electric supply: 230 V AC
Running power consumption: 80 W
Height: 550 mm
Width: 450 mm
Depth: 265 mm



| Code | Nominal heat exchanger capacity (kW) | | |
|---|---|---|---|
| **SATK20**203HE | 40 | 1 | - |

**Hydraulic diagram SATK20 - LOW temperature**

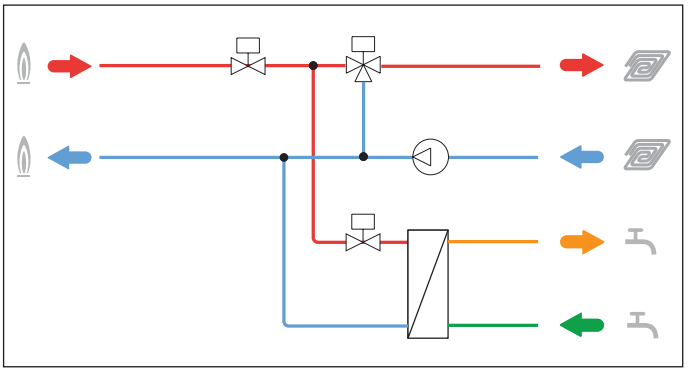

**Hydraulic diagram SATK20 - MEDIUM temperature**

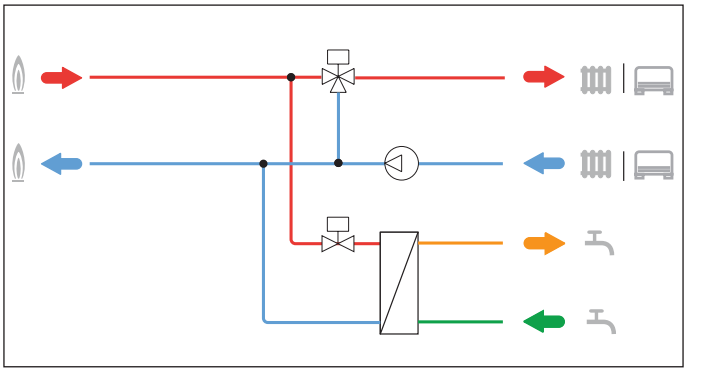

## SATK20

Electronic wall-hanging HIU **for high temperature heating system**.
Complete with:
- modulating control valves;
- plate heat excganger (DHW circuit);
- PPE insulation cover;
- suitable to CONTECA EASY 7504K and 7507K series heat meters.

Main electronic functions:
- DHW exchanger preheating.

Maximum working pressure: 10 bar
△p max.: 0,9 bar
Primary inlet working temperature range: 2–85 °C
Adjustment temperature range (DHW): 42–60 °C
Electric supply: 230 V AC
Running power consumption: 20 W
Height: 550 mm
Width: 450 mm
Depth: 265 mm



| Code | Nominal heat exchanger capacity (kW) | Maximum DHW instantaneous production (l/min) | | |
|---|---|---|---|---|
| **SATK20**303 | 40 | 18 | 1 | - |
| **SATK20**305 | 65 | 27 | 1 | - |

## SATK20

Electronic wall-hanging HIU **for high temperature heating system with primary pump**.
Complete with:
- modulating control valves;
- high efficiency pump (primary circuit);
- plate heat excganger (DHW circuit);
- PPE insulation cover;
- suitable to CONTECA EASY 7504K and 7507K series heat meters.

Main electronic functions:
- DHW exchanger preheating.

Maximum working pressure: 10 bar
△p max.: 0,9 bar
Primary inlet working temperature range: 2–85 °C
Adjustment temperature range (DHW): 42–60 °C
Maximum DHW instantaneous production: 18 l/min
Electric supply: 230 V AC
Running power consumption: 80 W
Height: 550 mm
Width: 450 mm
Depth: 265 mm



| Code | Nominal heat exchanger capacity (kW) | | |
|---|---|---|---|
| **SATK20**403HE | 40 | 1 | - |

**Hydraulic diagram SATK20 - HIGH temperature**

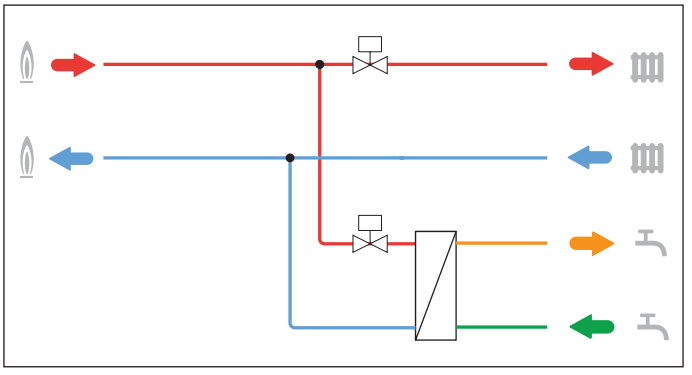

**Hydraulic diagram SATK20 - HIGH temperature, with booster pump**

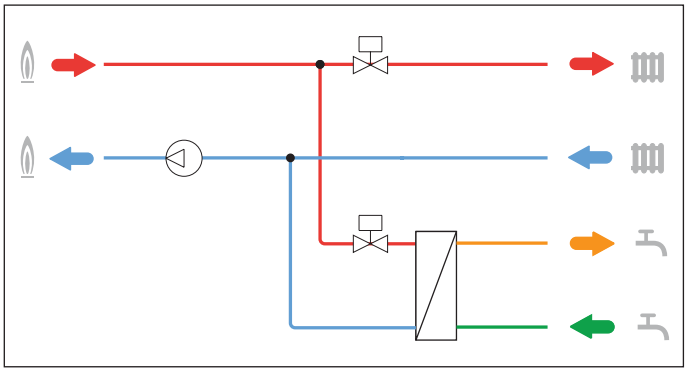

## Indirect heat interface unit with basic electronic regulation

### SATK30

Electronic wall-hanging HIU **with hydraulic separation**.
Complete with:
- modulating control valves;
- thermal safety thermostat;
- high efficiency pump (heating circuit);
- plate heat excganger (DHW circuit);
- plate heat excganger (heating circuit);
- 7 L expansion vessel;
- safety relief valve (3 bar setting);
- automatic filling unit with CB type backflow preventer;
- PPE insulation cover;
- suitable to CONTECA EASY 7504K and 7507K series heat meters.

Main electronic functions:
- DHW exchanger preheating programmable on hourly base;
- outside compensated temperature regulation.

Maximum working pressure: 16 bar
△p max.: 1,65 bar
Primary inlet working temperature range: 2–85 °C
Adjustment temperature range: 25–75 °C
Adjustment temperature range (DHW): 42–60 °C
Electric supply: 230 V AC
Running power consumption: 80 W
Height: 630 mm
Width: 550 mm
Depth: 265 mm



| Code | Nominal heat exchanger capacity (kW) | Maximum DHW instantaneous production (l/min) | | |
|---|---|---|---|---|
| **SATK30**103HE | 40 | 18 | 1 | - |
| **SATK30**105HE | 65 | 27 | 1 | - |

**Hydraulic diagram SATK30**

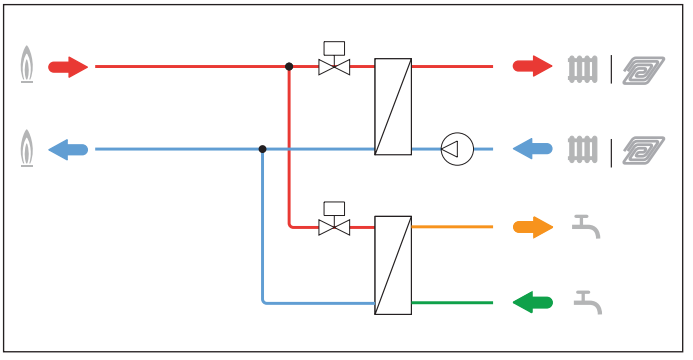

## Indirect heat interface unit for storage DHW production

### SATK40

Electronic wall-hanging HIU **with hydraulic separation for storage DHW production**.
Complete with:
- modulating control valve;
- diverting valve;
- thermal safety thermostat;
- high efficiency pump;
- plate heat excganger;
- 7 L expansion vessel;
- safety relief valve (3 bar setting);
- automatic filling unit with CB type backflow preventer;
- PPE insulation cover;
- suitable to CONTECA EASY 7504K and 7507K series heat meters.

Main electronic functions:
- outside compensated temperature regulation.

Maximum working pressure: 16 bar
△p max.: 1,65 bar
Primary inlet working temperature range: 2–85 °C
Adjustment temperature range: 25–75 °C
Electric supply: 230 V AC
Running power consumption: 80 W
Height: 630 mm
Width: 550 mm
Depth: 265 mm



| Code | | |
|---|---|---|
| **SATK40**103HE | 1 | - |

**Hydraulic diagram SATK40**

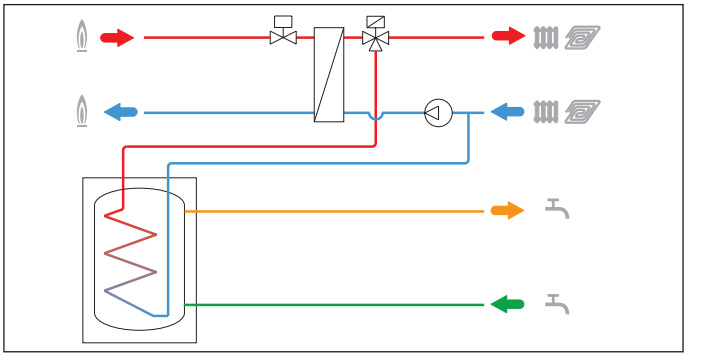

## Heat interface unit for DHW production only

# SATK10

Electronic wall-hanging HIU for domestic hot water production only.

Maximum working pressure: 10 bar
△p max.: 0,9 bar
Primary inlet working temperature range: 2–85 °C
Adjustment temperature range (DHW): 42–60 °C
Electric supply: 230 V AC
Running power consumption: 80 W
Height: 350 mm
Width: 476 mm
Depth: 188 mm



| Code | Notes | Nominal heat exchanger capacity (kW) | Maximum DHW instantaneous production (l/min) | | |
|---|---|---|---|---|---|
| **SATK10**203HE | - | 40 | 18 | 1 | - |
| **SATK10**204HE | - | 65 | 25 | 1 | - |
| **SATK10**205HE | - | 75 | 27 | 1 | - |
| **SATK10**253 | without primary pump | 40 | 18 | 1 | - |
| **SATK10**254 | without primary pump | 65 | 25 | 1 | - |
| **SATK10**255 | without primary pump | 75 | 27 | 1 | - |

## Completion codes for heat interface units with electronic regulation



# 789

Mounting template with shut-off valves for supply connection on the bottom side.
Complete with bottom-up system connection pipes.

Depth: 60 mm

| Code | Notes | | |
|---|---|---|---|
| **789**020 | for SATK20 series | 1 | - |
| **789**030 | por SATK30 and SATK40 series | 1 | - |



# 789

System flushing valve with shut-off by-pass.
For SATK20, SATK30 and SATK40 series.

| Code | Connection | | |
|---|---|---|---|
| **789**100 | 3/4" M | 1 | 25 |



# 789

Ball shut-off valve kit for secondary circuit.
For SATK20 - SATK30 series.

Maximum working pressure: 10 bar
Medium temperature range: 5–90 °C
Maximum percentage of glycol: 30 %
Medium: water, glycol solutions

| Code | Notes | | |
|---|---|---|---|
| **789**103 | for SATK20 and SATK30 series | 1 | 10 |
| **789**104 | for SATK40 series. | 1 | 10 |



# 789

Differential pressure control valve with fixed setting.
For SATK20, SATK30 and SATK40 series.

Maximum working pressure: 16 bar
△p max.: 6 bar

| Code | | |
|---|---|---|
| **789**603 | 1 | - |

# MECHANICAL WALL MOUNTED HEAT INTERFACE UNIT

## Mechanical wall mounted heat interface unit

### SATK15

Mechanical wall-hanging HIU for high temperature heating system.
Complete with:
- differential pressure control valve with fixed setting;
- diverter valve for DHW priority;
- proportional mechanical flow rate control valve;
- plate heat exchanger (DHW circuit).

Maximum working pressure: 10 bar
△p max.: 2 bar
Maximum DHW instantaneous production: 18 l/min

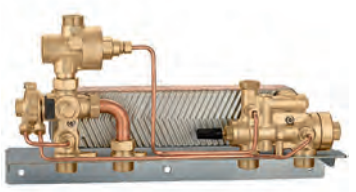

| Code | Notes | | |
|---|---|---|---|
| **SATK15**324 DPCV | - | 1 | - |
| **SATK15**325 DPCV | for systems with low primary temperature | 1 | - |

### SATK15

Mechanical wall-hanging HIU for high temperature heating system wit bottom connections.
Complete with:
- differential pressure control valve with fixed setting;
- diverter valve for DHW priority;
- proportional mechanical flow rate control valve;
- plate heat exchanger (DHW circuit);
- suitable to CONTECA EASY codes 750405G or 750705G heat meters.

Instantaneous DHW production.

Maximum working pressure: 10 bar
△p max.: 2 bar
Nominal heat exchanger capacity: 40 kW
Maximum DHW instantaneous production: 18 l/min

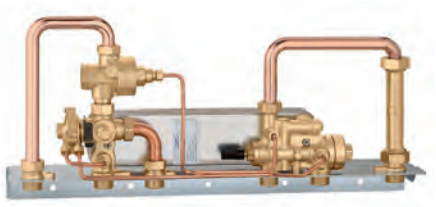

| Code | Notes | | |
|---|---|---|---|
| **SATK15**324 ABC | - | 1 | - |
| **SATK15**325 ABC | for systems with low primary temperature | 1 | - |

### SATK16

Mechanical wall-hanging HIU.
Complete with:
- differential pressure control valve with fixed setting;
- diverter valve for DHW priority;
- proportional mechanical flow rate control valve;
- plate heat exchanger (DHW circuit);
- heating zone valve with thermoeelctri actuator;
- thermostatic mixing valve;
- suitable to CONTECA EASY codes 750405G or 750705G heat meters.

Instantaneous DHW production.

Maximum working pressure: 10 bar
Depth: 200 mm
Height: 450 mm
Width: 420 mm
△p max.: 2 bar
△p max. - Notes: primary circuit
Primary inlet working temperature range: 2–85 °C



| Code | | |
|---|---|---|
| **SATK16**315 | 1 | - |

## Completion codes for mechanical heat interface units



### 789

Insulation for SATK15 series.

| Code | Article use | | |
|---|---|---|---|
| **789**323 | SATK15324 DPCV | 1 | - |
| **789**325 | SATK15325 DPCV | 1 | - |
| **789**314 | SATK15324 ABC, SATK15325 ABC | 1 | - |

# RECESS MOUNTED HEAT INTERFACE UNIT WITH ELECTRONIC REGULATION

## Recess mounted indirect heat interface unit with basic regulation

### SATK60

Compact recessed indirect heat interface unit **with hydraulic separation**.
Complete with:
- modulating control valves;
- thermal safety thermostat;
- high-efficiency pump (heating circuit);
- plate heat exchanger (DWS circuit);
- plate heat exchanger (heating circuit);
- expansion vessel 7 L;
- safety valve (setting 3 bar);
- charging unit with CB-type backflow preventer;
- suitable to CONTECA EASY cod. 750405G o 750705G heat meters.

Main electronic functions:
- DWS heat exchanger preheating;
- compensated set point regulation.

Maximum working pressure: 16 bar
△p max.: 1,65 bar
Primary inlet working temperature range: 2–85 °C
Adjustment temperature range: 25–75 °C
Adjustment temperature range (DHW): 42–60 °C
Maximum DHW instantaneous production: 18 l/min
Electric supply: 230 V AC
Running power consumption: 80 W
Height: 410 mm
Width: 570 mm
Depth: 110 mm



| Code | Notes | Nominal heat exchanger capacity (kW) | | |
|---|---|---|---|---|
| **SATK60**103HE | for recessed box installation | 40 | 1 | - |
| **SATK60**193HE | for wall hanging installation, without box (*) | 40 | 1 | - |

(*) It is necessary to use the shut-off valve kit code F0001495.

**Hydraulic diagram SATK60**

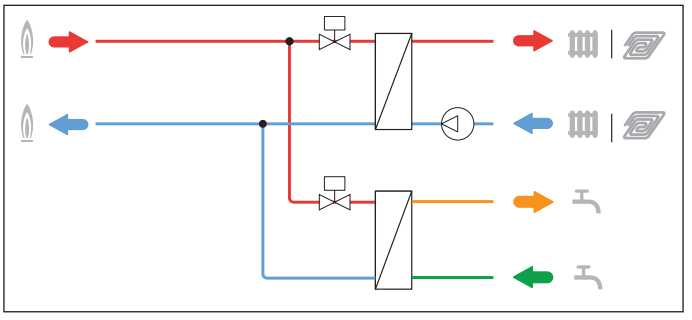



Ball shut-off valves kit.

Maximum working pressure: 10 bar
Medium temperature range: 5–90 °C

| Code | Notes | | |
|---|---|---|---|
| F0001495 | valve kit for SATK50.93HE/SATK60193HE | 1 | 5 |



### 7949

Recessed box for SATK60.
Complete with:
- painted sheet metal box;
- ball shut-off valves.

For SATK60 series.

Height: 890 mm
Width: 625 mm
Depth: 120 mm

| Code | | |
|---|---|---|
| **7949**60 | 1 | - |

# Recess mounted direct heat interface unit with basic regulation

## SATK50

Electronic recessed HIU **for low temperature heating system**.
Complete with:
- high temperature additional outlet;
- modulating control valve;
- thermal safety thermostat;
- high efficiency pump (heating circuit);
- plate heat excganger (DHW circuit);
- suitable to CONTECA EASY 7504K and 7507K heat meters.

Main electronic functions:
- DHW exchanger preheating programmable on hourly base;
- outside compensated temperature regulation.

Maximum working pressure: 10 bar
△p max.: 0,9 bar
Primary inlet working temperature range: 2–85 °C
Adjustment temperature range: 25–45 °C
Adjustment temperature range (DHW): 42–60 °C
Maximum DHW instantaneous production: 18 l/min
Electric supply: 230 V AC
Running power consumption: 80 W
Height: 410 mm
Width: 570 mm
Depth: 110 mm

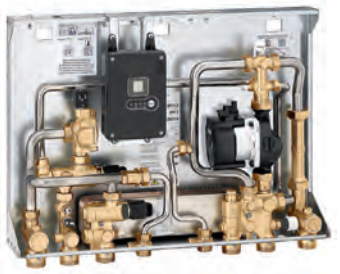

CE

| Code | Notes | Nominal heat exchanger capacity (kW) | | |
|---|---|---|---|---|
| **SATK50**103HE | for recessed box installation | 40 | 1 | - |
| **SATK50**193HE | for wall hanging installation, without box (*) | 40 | 1 | - |
| **SATK50**193HE 001 | for wall hanging installation, without box (*) | 40 | 1 | - |

(*) It is necessary to use the shut-off valve kit code F0001495.

## SATK50

Electronic recessed HIU **for medium temperature heating system**.
Complete with:
- modulating control valves;
- high efficiency pump (heating circuit);
- plate heat excganger (DHW circuit);
- suitable to CONTECA EASY 7504K and 7507K heat meters.

Main electronic functions:
- DHW exchanger preheating programmable on hourly base;
- outside compensated temperature regulation.

Maximum working pressure: 10 bar
△p max.: 0,9 bar
Primary inlet working temperature range: 2–85 °C
Adjustment temperature range: 45–75 °C
Adjustment temperature range (DHW): 42–60 °C
Maximum DHW instantaneous production: 18 l/min
Electric supply: 230 V AC
Running power consumption: 80 W
Height: 410 mm
Width: 570 mm
Depth: 110 mm



CE

| Code | Notes | Nominal heat exchanger capacity (kW) | | |
|---|---|---|---|---|
| **SATK50**203HE | for recessed box installation | 40 | 1 | - |
| **SATK50**293HE | for wall hanging installation, without box (*) | 40 | 1 | - |

(*) It is necessary to use the shut-off valve kit code F0001495.

**Hydraulic diagram SATK50 - LOW temperature**

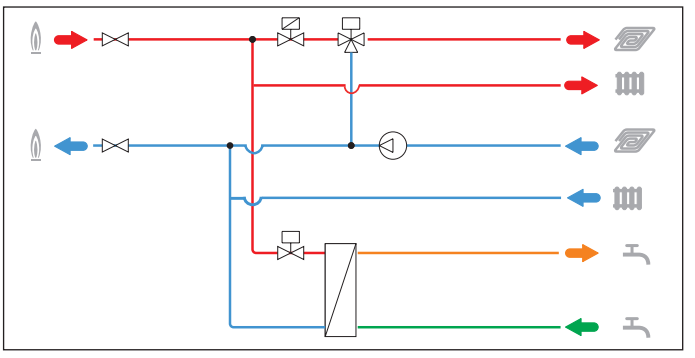

**Hydraulic diagram SATK50 - MEDIUM temperature**

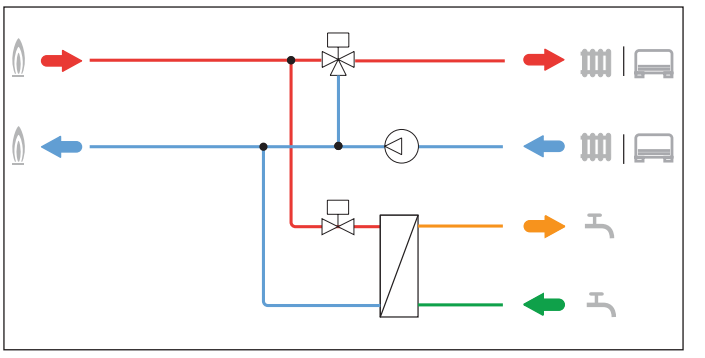

# SATK50

Electronic recessed HIU **for high temperature heating system.**
Complete with:
- modulating control valves;
- plate heat exchanger (DWH circuit);
- suitable to CONTECA EASY cod. 750405G o 750705G heat meters.

Main electronic functions:
- DWS heat exchanger preheating.

Maximum working pressure: 10 bar
△p max.: 0,9 bar
△p max. - Notes: primary circuit
Primary inlet working temperature range: 2–85 °C
Adjustment temperature range (DHW): 42–60 °C
Maximum DHW instantaneous production: 18 l/min
Electric supply: 230 V AC
Running power consumption: 20 W
Height: 410 mm
Width: 570 mm
Depth: 110 mm



CE

| Code | Notes | Nominal heat exchanger capacity (kW) | | |
|---|---|---|---|---|
| **SATK50**303 | for recessed box installation | 40 | 1 | - |
| **SATK50**393 | for wall hanging installation, without box (*) | 40 | 1 | - |
| **SATK50**393 001 | for wall hanging installation, without box, with insulation cover (*) | 40 | 1 | - |

(*) It is necessary to use the shut-off valve kit code F0001495.

**Hydraulic diagram SATK50 - HIGH temperature**

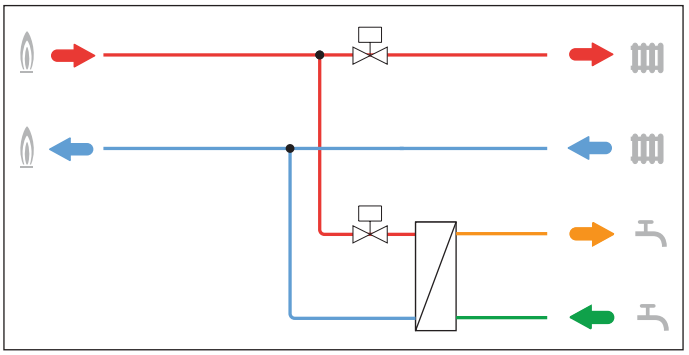



Ball shut-off valves kit.

Maximum working pressure: 10 bar
Medium temperature range: 5–90 °C

| Code | Notes | | |
|---|---|---|---|
| F0001495 | valve kit for SATK50.93HE/SATK60193HE | 1 | 5 |



## 7945

Template for domestic water meter.
Complete with:
- ball shut-off valve with built-in check valve BALLSTOP (inlet);
- flushing pipe template.

For SATK20, SATK30, SATK50 and SATK60 series.
Suitable for the use with volume meter cod 794204.

| Code | Connection | | |
|---|---|---|---|
| **7945**40 | 3/4" M | 1 | - |



## 7949

Recessed box for SATK50.
Complete with:
- painted sheet metal box;
- ball shut-off valves.

For SATK50 series.

Height: 700 mm
Width: 600 mm
Depth: 120 mm

| Code | | |
|---|---|---|
| **7949**50 | 1 | - |

# HEAT METERS

## Heat meters



### 7504G CONTECA EASY

Direct heat meter for heating and cooling systems.
Complete with:
- electronic integrator with LCD display;
- pair of immersion temperature probes;
- turbine volume meter with pulse output;
- 2 pulse inputs for DHW and DCW.

Upgradable with configuration options to be ordered together (*).

Medium temperature range: 2–90 °C
Nominal pressure: PN 16
Accuracy class: 3
Probe/cable length: 1 m
Electric supply: 24 V AC
Running power consumption: 1 W
Protection class: IP 54
Communication protocol: M-Bus on RS485

CE 2014/32/UE (MI004)

| Code | Connection | Permanent flow rate (Qp) ($m^3/h$) | Minimum flow rate (Qi) (l/h) | Measure type | | |
|---|---|---|---|---|---|---|
| 750405G | 1" M | 2,5 | 50 | single nozzle | 1 | - |
| 750406G | 1 1/4" M | 3,5 | 70 | multi-nozzle | 1 | - |
| 750407G | 1 1/2" M | 6 | 120 | multi-nozzle | 1 | - |



### 7507G CONTECA EASY ULTRA

Direct heat meter for heating and cooling systems(*).
Complete with:
- electronic integrator with LCD display
- pair of immersion temperature probes;
- ultrasonic volume meter with pulse output;
- 2 pulse inputs for DHW and DCW.

Upgradable with configuration options to be ordered together (*).

Medium temperature range: 2–90 °C
Nominal pressure: PN 16
Accuracy class: 2
Probe/cable length: 1 m
Electric supply: 24 V AC
Running power consumption: 1 W
Protection class: IP 54
Communication protocol: M-Bus on RS485

CE 2014/32/UE (MI004)

| Code | Connection | Permanent flow rate (Qp) ($m^3/h$) | Minimum flow rate (Qi) (l/h) | | |
|---|---|---|---|---|---|
| 750705G | 1" M | 2,5 | 10 | 1 | - |
| 750706G | 1 1/4" M | 3,5 | 35 | 1 | - |
| 750707G | 1 1/2" M | 6 | 24 | 1 | - |



### 7504K CONTECA EASY

Direct heat meter for heat interface units.
Complete with:
- electronic integrator with LCD display;
- pair of immersion temperature probes;
- turbine volume meter with pulse output;
- mounting brackets;
- pulse input for DCW.

Upgradable with configuration options to be ordered together (*).

Medium temperature range: 2–90 °C
Nominal pressure: PN 16
Accuracy class: 3
Probe/cable length: 1 m
Electric supply: 24 V AC
Running power consumption: 1 W
Protection class: IP 54
Communication protocol: M-Bus on RS485

CE 2014/32/UE (MI004)

| Code | Connection | Permanent flow rate (Qp) ($m^3/h$) | Minimum flow rate (Qi) (l/h) | Measure type | | |
|---|---|---|---|---|---|---|
| 750405K | 1" M | 2,5 | 50 | single nozzle | 1 | - |



### 7507K CONTECA EASY ULTRA

Direct heat meter for heat interface units.
Complete with:
- pair of immersion temperature probes (L= 1,9 m);
- ultrasonic volume meter with pulse output;
- electronic integrator with LCD display.

For SATK10/20/22/30/32/40 series.
Local reading via LCD display/centralised reading via BUS transmission.
Volume meter ultrasonic.

Medium temperature range: 2–90 °C
Nominal pressure: PN 16
Accuracy class: 2
Probe/cable length: 1 m
Electric supply: 24 V AC
Running power consumption: 1 W
Protection class: IP 54
Communication protocol: M-Bus on RS485

CE 2014/32/UE (MI004)

| Code | Connection | Permanent flow rate (Qp) ($m^3/h$) | Minimum flow rate (Qi) (l/h) | | |
|---|---|---|---|---|---|
| 750705K | 1" M | 2,5 | 50 | 1 | - |



## 7558

**Heat metering for cooling systems**.
The configuration option allows the upgrade on CONTECA EASY heat meters.

| Code | Notes | | |
|---|---|---|---|
| **7558**10 | | 1 | - |




## 7508

MODBUS-RTU transmission option.
The option allows to add the function to CONTECA EASY heat meters and AQUAPRO EASY acquisition devices.
Max n. devices on Modbus network: 50
Communication parameters: 9600,8,E/N,1

| Code | | |
|---|---|---|
| **7508**11 | 1 | - |

(*)Configuration options needs to be chosen when placing the order on heat meter in which they have to be enabled.

# WATER METERS

## Water meters



### 7942

Water meter with pulse output.
Complete with fittings.

Medium: domestic water
Pulse weight: 10 l/pulse
Nominal pressure: PN 16

ATTESTATION DE CONFORMITÉ SANITAIRE ACS

2014/32/UE (MI001)

| Code | Connection | Notes | Medium temperature range (°C) | Permanent flow rate (DW) (Q3) ($m^3/h$) | | |
|---|---|---|---|---|---|---|
| **794**04 | 1/2″ M | DCW* | 0–50 | 2,5 | 1 | 5 |
| **794**05 | 3/4″ M | DCW* | 0–50 | 4,0 | 1 | 5 |
| **794**06 | 1″ M | DCW** | 0–50 | 6,3 | 1 | - |
| **794**07 | 1 1/4″ M | DCW** | 0–50 | 10 | 1 | - |
| **794**08 | 1 1/2″ M | DCW** | 0–50 | 16 | 1 | - |
| **794**09 | 2″ M | DCW** | 0–50 | 25 | 1 | - |
| **794**04/C | 1/2″ M | DHW* | 30–90 | 2,5 | 1 | 5 |
| **794**05/C | 3/4″ M | DHW* | 30–90 | 4,0 | 1 | 5 |
| **794**06/C | 1″ M | DHW** | 30–90 | 6,3 | 1 | - |
| **794**07/C | 1 1/4″ M | DHW** | 30–90 | 10 | 0 | - |
| **794**08/C | 1 1/2″ M | DHW** | 30–90 | 16 | 1 | - |
| **794**09/C | 2″ M | DHW** | 30–90 | 25 | 1 | - |



### 7942

Water meter **with pulse output**.

Medium: domestic water
Pulse weight: 100 l/pulse
Nominal pressure: PN 16
Medium temperature range: 0–50 °C

2014/32/UE (MI001)

| Code | Connection | Notes | Permanent flow rate (DW) (Q3) ($m^3/h$) | | |
|---|---|---|---|---|---|
| **794**10 | DN 65 - PN 16 | ** | 63 | 1 | - |
| **794**11 | DN 80 - PN 16 | ** | 100 | 1 | - |
| **794**12 | DN 100 - PN 16 | ** | 160 | 1 | - |

** for installation with horizontal dial



### 7000

Template for domestic water meter.
**For 7942 series meter, 3/4" connections**.
Complete with:
- BALLSTOP ball shut-off valve with check valve (inlet);
- ball shut-off valve (outlet);
- technopolymer flushing pipe template;
- mounting bracket.

Medium temperature range: 5–55 °C

| Code | Connection | | |
|---|---|---|---|
| **700**09 | 3/4″ M | 0 | - |

* for installation with horizontal dial facing upwards or in vertical position

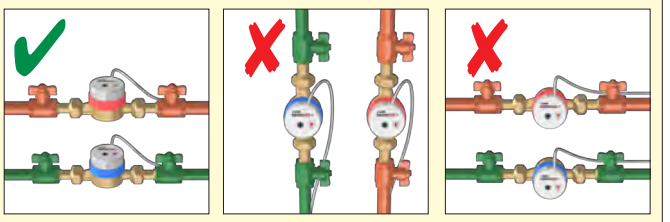

** for installation with dial horizontal facing upwards

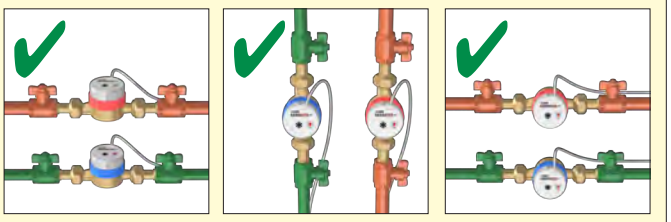

Maximum extension of the volume meter/logger connection cable: 50 m. For use with a shielded cable with the same cross-section and routed in a dedicated raceway.

# Water metering for domestic hot water recirculation systems



## 750 AQUAPRO EASY

Multiple data acquisition device for domestic hot and cold water consumption.
Complete with:
- electronic integrator with LCD display;
- 4 pulse inputs.

Electric supply: 24 V AC
Running power consumption: 1 W
Protection class: IP 54
Communication protocol: M-Bus on RS485

CE

| Code | | |
|---|---|---|
| **750**947 600 | 1 | - |



## 7558

**Flow rate scanning software options for DHW recirculation.**
The option allows to add the function to CONTECA EASY heat meters.
The option must be ordered in combination with 755826 00. DHW meter and AUTOFLOW kit.

| Code | | |
|---|---|---|
| **7558**26 | 1 | - |



## 7558

Hydraulic kit for water metering with DHW recirculation.
Complete with:
- water meter with pulse output;
- AUTOFLOW 127 series.

Pulse weight: 1 l/pulse

ATTESTATION DE CONFORMITÉ SANITAIRE ACS 2014/32/UE (MI001)

| Code | attacco contatore volumetrico | attacco AUTOFLOW | Nominal flow rate (l/h) | Permanent flow rate (DW) (Q3) ($m^3$/h) | | |
|---|---|---|---|---|---|---|
| **7558**26 004 | 1/2" M | 1/2" | 40 | 2,5 | 1 | 5 |
| **7558**26 005 | 3/4" M | 1/2" | 40 | 4,0 | 1 | 5 |
| **7558**26 006 | 1" M | 3/4" F | 60 | 6,3 | 1 | - |



## 7508

MODBUS-RTU transmission option.
The option allows to add the function to CONTECA EASY heat meters and AQUAPRO EASY acquisition devices.
Max n. devices on Modbus network: 50
Communication parameters: 9600,8,E/N,1

| Code | | |
|---|---|---|
| **7508**11 | 1 | - |

Configuration options needs to be chosen when placing the order on heat meter in which they have to be enabled.

**Application diagram**

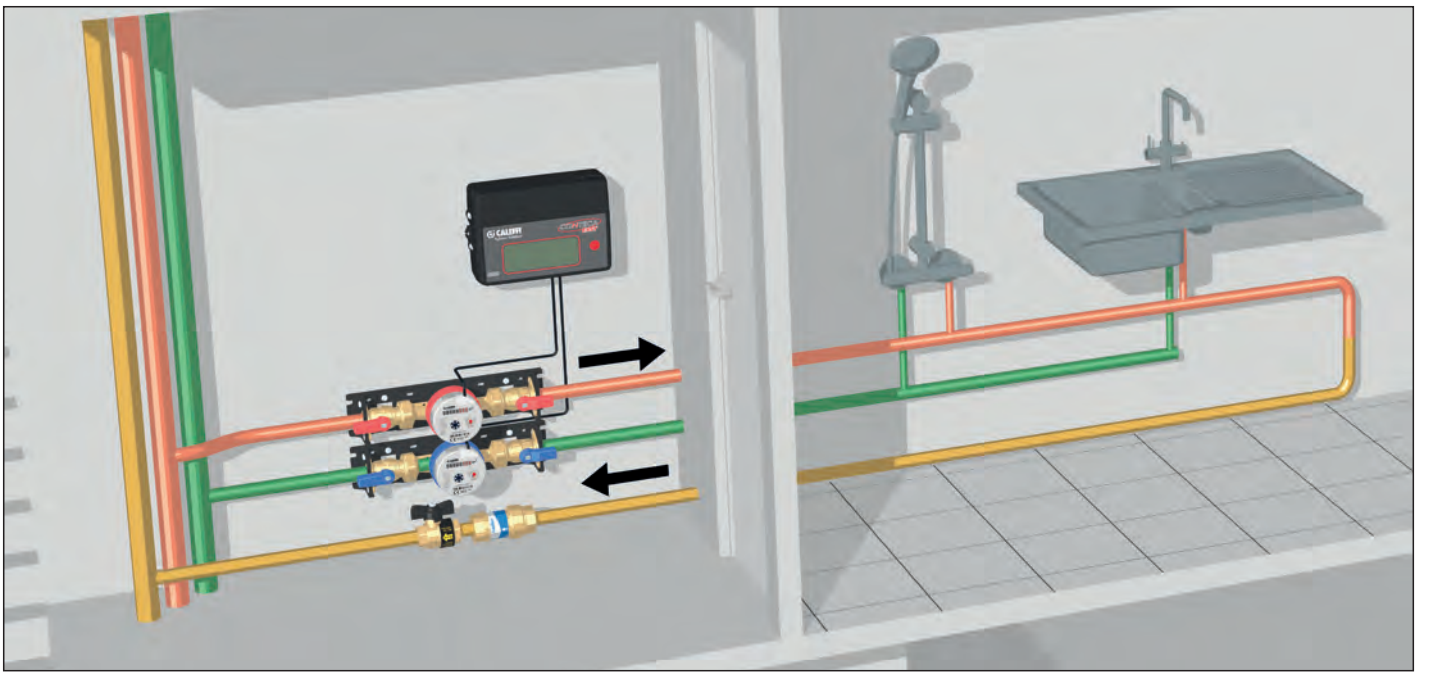

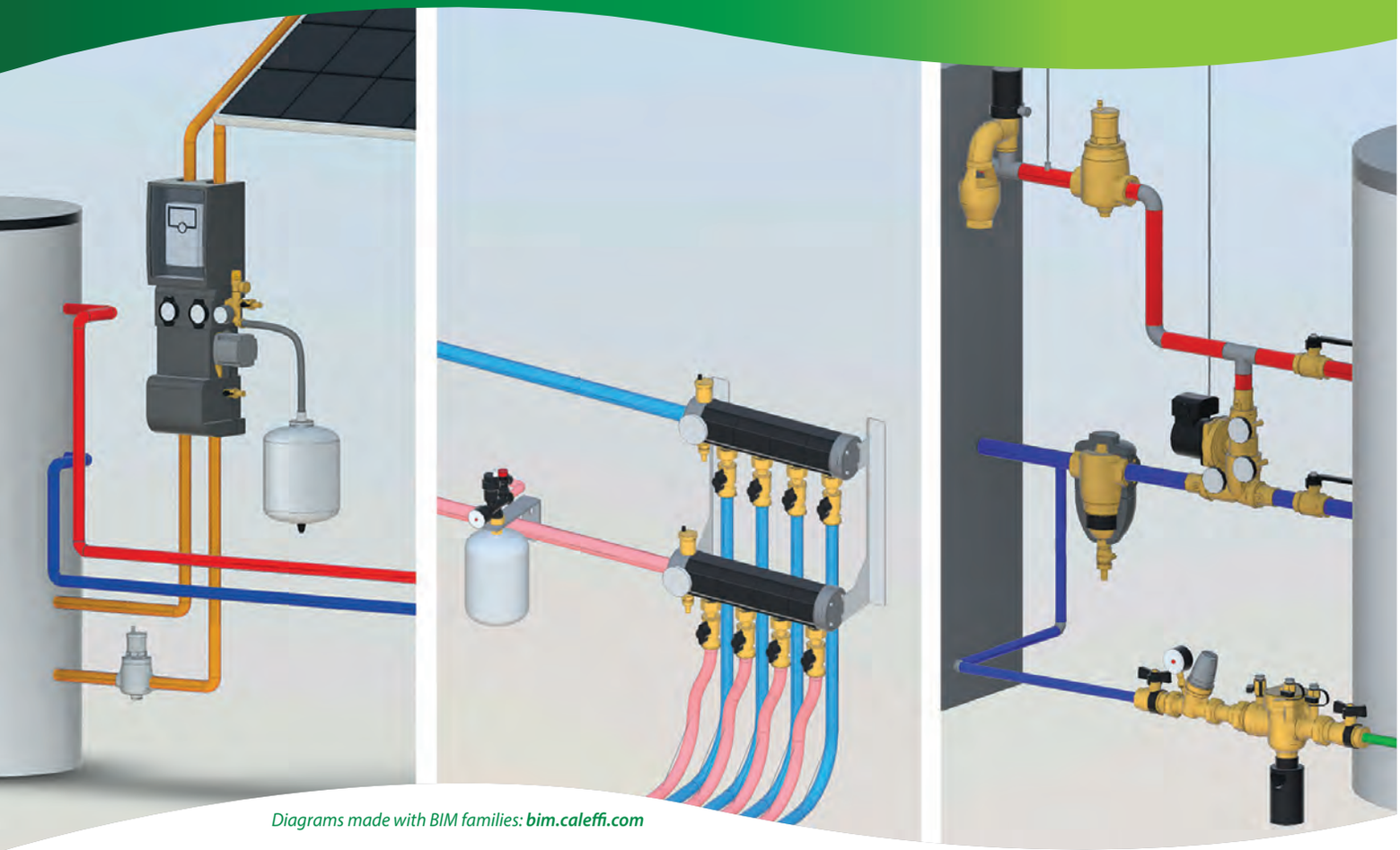

*Diagrams made with BIM families:* ***bim.caleffi.com***

**Safety devices for solar thermal systems**
**Automatic air vents and deaerators for solar thermal systems**
**Pump stations for solar thermal systems**
**Spare parts for circulation units**
**Fittings for solar thermal systems**
**Direct heat meter**
**Shut-off and balancing valves for solar thermal systems**
**Zone/diverter valves**
**Motorised diverter valve for solar thermal systems**
**Thermostatic mixing valve for solar thermal systems**
**Solar storage-to-boiler connection kit**
**Geothermal manifold**
**Safety relief valves for biomass systems**
**Control devices for biomass systems**

## COMPONENTS FOR SOLAR THERMAL SYSTEMS

The CALEFFI SOLAR product range has been specifically developed for use in solar thermal systems, where high temperatures can normally be reached and where, depending on the kind of system, there can be glycol. Materials and performance of the components must necessarily take into account these particular operating conditions.

**- Components for closed systems**

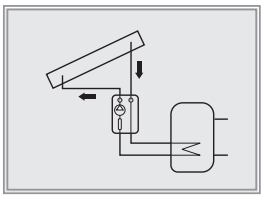

**- Components for opened systems**

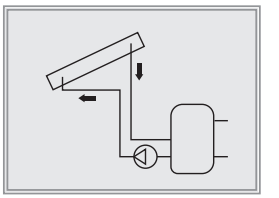

## COMPONENTS FOR GEOTHERMAL SYSTEMS

The products in the CALEFFI GEO series have been specifically designed for use in heat pump systems. In ground source heat pumps a mixture of water and antifreeze fluid is generally used to protect against freezing temperatures.
The components are made with high-performance materials for this type of applications.

**- Components for water-water heat pumps**

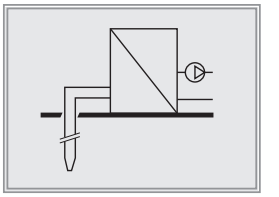

## COMPONENTS FOR BIOMASS SYSTEMS

The CALEFFI BIOMASS® product series has been created specifically to be used in circuits of systems with wood solid fuel generators, operating at high temperature with water or glycol solutions as thermal medium. The materials of the components and their performance take account of the specific system needs in terms of efficiency and safety of the generators and systems.

**- Safety and protection components**

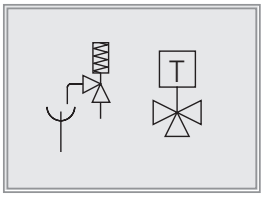


**- Control units**

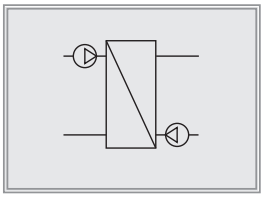

# COMPONENTS FOR SOLAR THERMAL SYSTEMS

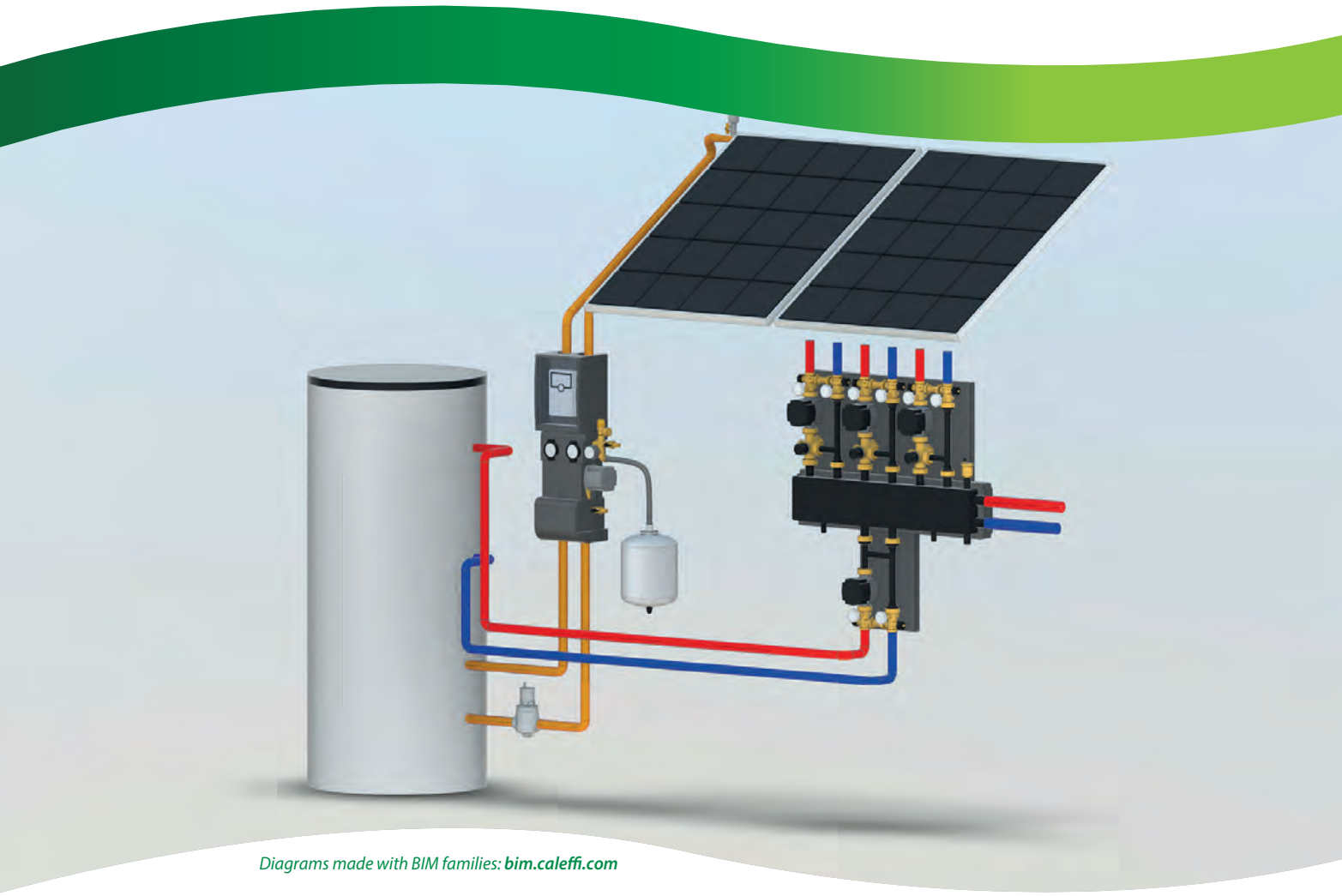

*Diagrams made with BIM families:* ***bim.caleffi.com***

**Safety relief valves for solar thermal systems**
**Anti-freeze devices**
**Temperature and pressure relief valves for solar thermal systems**
**Automatic air vents for solar thermal systems**
**Deaerators for solar thermal systems**
**Manual air separator for solar thermal systems**
**Pump stations for solar thermal systems**
**Regulator for solar thermal systems**
**Expansion vessels for solar thermal systems**
**Accessories and spare parts for pump stations for solar thermal systems**
**Spare parts for circulation**
**Spare parts for circulation**
**Mechanical O-ring seal for solar thermal systems**
**Three-piece union fitting**
**Turbine heat meter for solar systems**
**Balancing valves for solar thermal systems**
**Shut-off valves for solar thermal systems**
**Zone/diverter ball valves (three-way)**
**Thermostatic diverter valves for solar thermal systems**
**Solar thermostatic mixing valve**
**Solar storage-to-boiler**
**Accessories and spare parts for connection kit**

**Domestic Water Sizer**
**DOMESTIC WATER SYSTEM SIZER ALSO FOR SMARTPHONE**
**Available on www.caleffi.com and app for smartphone.**
**Download the version for your iOS and Android® mobile phone.**

# SAFETY DEVICES FOR SOLAR THERMAL SYSTEMS

## Safety relief valves for solar thermal systems



### 253

Safety relief valves for solar systems.
Oversized drain outlet.
TÜV approved according to TRD 721 - SV 100 § 7.7.

Medium temperature range: -30–160 °C
Nominal pressure: PN 10
Finish: nickel plated
Maximum percentage of glycol: 50 %
Medium: water, glycol solutions
Material: brass

CE 2797 · TÜV www.tuv.com ID 0000013604 · WRAS APPROVED PRODUCT CERTIFICATION MARK

| Code | Connection | Drain connection | Maximum discharge rating (kW) | Pressure setting (bar) | | |
|---|---|---|---|---|---|---|
| **253**042 | 1/2" F | 3/4" F | 50 | 2,5 | 1 | 50 |
| **253**043 | 1/2" F | 3/4" F | 50 | 3 | 1 | 50 |
| **253**044 | 1/2" F | 3/4" F | 50 | 4 | 1 | 50 |
| **253**046 | 1/2" F | 3/4" F | 50 | 6 | 1 | 50 |
| **253**048 | 1/2" F | 3/4" F | 50 | 8 | 1 | 50 |
| **253**040 | 1/2" F | 3/4" F | 50 | 10 | 1 | 50 |
| **253**052 | Rp 3/4" F | Rp 1" F | 100 | 2,5 | 1 | 25 |
| **253**053 | Rp 3/4" F | Rp 1" F | 100 | 3 | 1 | 25 |
| **253**054 | Rp 3/4" F | Rp 1" F | 100 | 4 | 1 | 25 |
| **253**056 | Rp 3/4" F | Rp 1" F | 100 | 6 | 1 | 25 |
| **253**058 | Rp 3/4" F | Rp 1" F | 100 | 8 | 1 | 25 |
| **253**050 | Rp 3/4" F | Rp 1" F | 100 | 10 | 1 | 25 |

## Anti-freeze devices



### 603 ICECAL

Anti-freeze safety device.
**For solar thermal systems, to protect the hot water storage**.
PATENT

Maximum working pressure: 10 bar
Ambient temperature range: -30–90 °C
Opening temperature: 3 °C
Closing temperature: 4 °C
Material: dezincification resistant brass DR

| Code | Connection | | |
|---|---|---|---|
| **603**040 | 1/2" F captive nut | 1 | 50 |

## Temperature and pressure relief valves for solar thermal systems



### 309

Temperature and pressure relief valve.
**For solar thermal systems, to protect the hot water storage**.
For solar thermal systems, to protect the hot water storage.
Certified to EN 1490 with settings: 7 - 10 bar.

Finish: chrome plated
Material: dezincification resistant brass DR
Temperature setting: 90 °C

CE 2797 · WRAS APPROVED PRODUCT CERTIFICATION MARK

| Code | Connection | Drain connection | Maximum discharge rating (kW) | Pressure setting (bar) | | |
|---|---|---|---|---|---|---|
| **309**461 | 1/2" M | Ø 15 | 10 | 6 | 1 | 20 |
| **309**471 | 1/2" M | Ø 15 | 10 | 7 | 1 | 20 |
| **309**401 | 1/2" M | Ø 15 | 10 | 10 | 1 | 20 |
| **309**561 | 3/4" M | Ø 22 | 25 | 6 | 1 | 20 |
| **309**571 | 3/4" M | Ø 22 | 25 | 7 | 1 | 20 |
| **309**501 | 3/4" M | Ø 22 | 25 | 10 | 1 | 20 |

# AUTOMATIC AIR VENTS AND DEAERATORS FOR SOLAR THERMAL SYSTEMS

## Automatic air vents for solar thermal systems




### 250

Automatic air vent for solar thermal systems.
Complete with:
- automatic air vent for solar thermal systems;
- shut-off cock complete with seal.

Maximum working pressure: 10 bar
Maximum air discharge pressure: 5 bar
Medium temperature range: -30–180 °C
Maximum percentage of glycol: 50 %
Medium: water, glycol solutions
Material: brass
Finish: nickel plated

WRAS APPROVED PRODUCT CERTIFICATION MARK

| Code | Connection | Notes | | |
|---|---|---|---|---|
| **250**031 | 3/8" M | without cock | 1 | 25 |
| **250**131 | 3/8" M | - | 1 | 25 |
| **250**041 | 1/2" M | without cock | 1 | 25 |

**The automatic air vent must be shut off after the system has been filled.**





## 250

Shut-off cock.
Complete with seal.

Maximum working pressure: 10 bar
Medium temperature range: -30–200 °C
Maximum percentage of glycol: 50 %
Medium: water, glycol solutions
Material: brass
Finish: nickel plated

WRAS APPROVED PRODUCT
CERTIFICATION MARK

| Code | Connection 1 | Connection 2 | Notes | | |
|---|---|---|---|---|---|
| **250**300 | 3/8" M | 3/8" F | butterfly handle | 1 | 10 |
| **250**400 | 1/2" M | 1/2" F | lever handle | 1 | 10 |



## 250

Automatic air vent for solar thermal systems.
Complete with:
- automatic air vent for solar thermal systems;
- shut-off cock complete with seal.

Maximum working pressure: 10 bar
Maximum air discharge pressure: 2,5 bar
Medium temperature range: -30–180 °C
Maximum percentage of glycol: 50 %
Medium: water, glycol solutions
Material: brass
Finish: nickel plated

| Code | Connection | Notes | | |
|---|---|---|---|---|
| **250**831 | 3/8" M | without cock | 10 | 50 |
| **250**931 | 3/8" M | - | 1 | 50 |



## 251 DISCALAIR®

High-performance automatic air vent for solar thermal systems.

Maximum working pressure: 10 bar
Maximum air discharge pressure: 10 bar
Medium temperature range: -30–160 °C
Maximum percentage of glycol: 50 %
Medium: glycol solutions
Material: brass
Finish: nickel plated

| Code | Connection | | |
|---|---|---|---|
| **251**004 | 1/2" F | 1 | 10 |

# Deaerators for solar thermal systems



## 251 DISCAL®

Deaerator for solar thermal systems.

Maximum working pressure: 10 bar
Maximum air discharge pressure: 10 bar
Medium temperature range: -30–160 °C
Maximum percentage of glycol: 50 %
Medium: water, glycol solutions
Material: brass

| Code | Connection | | |
|---|---|---|---|
| **251**003 | 3/4" F | 1 | 10 |



## 251 DISCAL®

Deaerator for solar thermal systems.
With drain.
PATENT

Maximum working pressure: 10 bar
Maximum air discharge pressure: 10 bar
Medium temperature range: -30–160 °C
Maximum percentage of glycol: 50 %
Medium: water, glycol solutions
Material: brass

| Code | Connection | | |
|---|---|---|---|
| **251**006 | 1" F | 1 | - |
| **251**007 | 1 1/4" F | 1 | - |

# Manual air separator for solar thermal systems



## 251

Manual air separator for solar thermal systems.

Maximum working pressure: 10 bar
Medium temperature range: -30–200 °C
Maximum percentage of glycol: 50 %
Medium: water, glycol solutions
Material: brass

| Code | Connection | | |
|---|---|---|---|
| **251**093 | 3/4" F | 1 | 10 |

**Application diagram of DISCAL® 251 series**

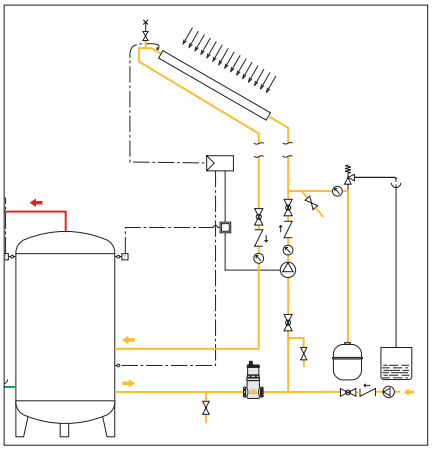

# PUMP STATIONS FOR SOLAR THERMAL SYSTEMS

## Pump stations for solar thermal systems

### 278

Pump station for solar thermal systems, return connection.
**With PWM control**.
Complete with:
- Solar circulation pump;
- 253 series safety relief valve for solar thermal systems;
- filler/drain cock;
- instrument holder fitting with pressure gauge;
- flow meter;
- return temperature gauge;
- shut-off and check valve;
- 2 hose connections.

**With insulation**.

Maximum working pressure: 10 bar
Medium temperature range: -10–110 °C
Medium: water, glycol solutions
Maximum percentage of glycol: 50 %
Type of pump: UPM3 15-75
Electric supply: 230 V AC



CE

| Code | Connection | Notes | Flow meter scale (l/min) | | |
|---|---|---|---|---|---|
| **278**050HE | 3/4" F | with PWM control | 1–13 | 1 | - |
| **278**052HE | 3/4" F | - | 8–30 | 1 | - |

Can be combined with controller featuring PWM or ON/OFF control.

### 279

Pump station for solar thermal systems, flow and return connection.
**With PWM control**.
Complete with:
- Solar circulation pump;
- 253 series safety relief valve for solar thermal systems;
- filler/drain cock;
- instrument holder fitting with pressure gauge;
- flow meter;
- return temperature gauge;
- shut-off and check valve;
- 2 hose connections.

**With insulation**.

Maximum working pressure: 10 bar
Medium temperature range: -10–110 °C
Medium: glycol solutions, water
Maximum percentage of glycol: 50 %
Type of pump: UPM3 15-75
Electric supply: 230 V AC



CE

| Code | Connection | Flow meter scale (l/min) | | |
|---|---|---|---|---|
| **279**050HE | 3/4" F | 1–13 | 1 | - |
| **279**052HE | 3/4" F | 8–30 | 1 | - |

Can be combined with controller featuring PWM or ON/OFF control.

# 255

Pump station for solar thermal systems, flow and return connection.
**With PWM control**.
Complete with:
- Grundfos Solar circulation pump with PWM control only;
- 253 series safety relief valve for solar thermal systems;
- 2 filler/drain cocks complete with hose connection;
- instrument holder fitting with pressure gauge;
- flow regulator with flow meter;
- air vent device;
- flow temperature gauge;
- return temperature gauge;
- 2 shut-off and check valves.

Can be combined with controller featuring PWM control.
(For other settings refer to 253).
**With insulation**.

Maximum working pressure: 10 bar
Medium temperature range: -30–120 °C
Medium: water, glycol solutions
Maximum percentage of glycol: 50 %
Type of pump: PML 25-145
Electric supply: 230 V AC



CE

| Code | Connection | Flow meter scale (l/min) | | |
|---|---|---|---|---|
| **255**266HE | 1″F | 5–40 | 1 | - |

Can be combined with controller featuring PWM control.

## Regulator for solar thermal systems




# 278

Digital regulator DeltaSol SLL with PWM control.
Complete with 3 Pt1000 probes, with optional fourth probe.
Functions: differential temperature regulator with supplementary and optional functions.
Inlet: for 4 Pt1000 temperature probes.
Outputs: 3 semiconductor relays. 2 PWM.
**With insulation**.

Electric supply: 230 V AC

CE

| Code | Notes | | |
|---|---|---|---|
| **278**005 | - | 1 | - |
| F29883 | PWM cable | 1 | - |

## Expansion vessels for solar thermal systems



### 259

Welded expansion vessel only for primary circuit of solar thermal systems, EC certification.
Bladder membrane.
Conforms to EN standard 13831.

Maximum working pressure: 10 bar
System working temperature range: -10–120 °C
Diaphragm temperature range: -10–70 °C
Maximum percentage of glycol: 50 %
Medium: water, glycol solutions
Pre-charge: 2,5 bar

CE 0045

| Code | Connection | Volume (l) | | |
|---|---|---|---|---|
| **259**008 | 3/4″ M | 8 | 1 | - |
| **259**012 | 3/4″ M | 12 | 1 | - |
| **259**018 | 3/4″ M | 18 | 1 | - |
| **259**025 | 3/4″ M | 25 | 1 | - |
| **259**033 | 3/4″ M | 33 | 1 | - |



### 259

Welded expansion vessel only for primary circuit of solar thermal systems, EC certification.
Diaphragm membrane.
Conforms to EN standard 13831.

Maximum working pressure: 10 bar
System working temperature range: -10–120 °C
Diaphragm temperature range: -10–70 °C
Maximum percentage of glycol: 50 %
Medium: water, glycol solutions
Pre-charge: 2,5 bar

CE 0045

| Code | Connection | Volume (l) | | |
|---|---|---|---|---|
| **259**050 | 3/4″ M | 50 | 1 | - |
| **259**080 | 1″ M | 80 | 1 | - |



### 5580

Ball shut-off valve for expansion vessels, **with drain cock. For solar thermal systems.**

Maximum working pressure: 6 bar
Medium temperature range: 5–120 °C
Medium: water, glycol solutions
Maximum percentage of glycol: 50 %

| Code | Connection | | |
|---|---|---|---|
| **5580**52 | 3/4″ F | 1 | 20 |
| **5580**62 | 1″ F | 1 | 20 |

## Accessories and spare parts for pump stations for solar thermal systems



### 255

Expansion vessel connection kit.
Complete with:
- stainless steel hose (L=610 mm);
- automatic shut-off cock;
- wall mounting bracket (for vessels up to 24 litres).

Maximum working pressure: 10 bar
Medium temperature range: -10–110 °C
Maximum percentage of glycol: 50 %
Medium: water, glycol solutions

| Code | Connection | | |
|---|---|---|---|
| **255**007 | 3/4″ F | 1 | - |



### 255

System filling pump for pump stations 279, 278 and 255 series.
For 255, 256, 267, 266, 279 and 278 series circulation units.

| Code | | |
|---|---|---|
| **255**010 | 1 | - |



Accessory for circulation units in the 266, 267, 268, 269, 278 and 279 series.
For use during installation of 253 series 1/2″ valves.

| Code | Notes | | |
|---|---|---|---|
| F21224 | adapter | 1 | - |

# SPARE PARTS FOR CIRCULATION UNITS

## Spare parts for circulation units for 278-279 series



Spare pump UPM3 15-75 for 278HE and 279HE series, with cable.

CE

| Code | Type of pump | | |
|---|---|---|---|
| F29885 | UPM3 15-75 | 1 | - |



Safety relief valve, 6 bar.

| Code | | |
|---|---|---|
| F0000602 | 1 | - |



### 161

Pt1000 probe, Ø6 mm.

| Code | Notes | Article use | | |
|---|---|---|---|---|
| **161**006 | L 45 mm, L cable 2,5 m | 161010 | 1 | - |



### 257

Spare parts for 2851 and 1522 series.

| Code | Notes | | |
|---|---|---|---|
| **257**006 | Pt1000 probe - temperature–50–180 °C | 1 | - |
| **257**007 | flow temperature gauge for 267, 269 and 279 series | 1 | - |
| **257**008 | return temperature gauge for 266, 267, 268, 269 e 279 | 1 | - |
| R29435 | pressure gauge for 278, 279 series | 1 | - |



### 161

Pt1000 probe pocket, size 1/2" M.

| Code | Notes | Article use | | |
|---|---|---|---|---|
| **161**014 | L 100 mm | 161010, 150006, 257006 | 1 | - |



### 278

Spare flow meters for 278 and 279 series circulation units.

| Code | Flow meter scale (l/min) | | |
|---|---|---|---|
| **278**003 | 1–13 | 1 | - |
| **278**004 | 8–30 | 1 | - |

## Spare parts for circulation units for 255 series



### 255

1" flow meter for unit code 255266HE.

| Code | Flow meter scale (l/min) | | |
|---|---|---|---|
| **255**018 | 5–40 | 1 | - |



Spare pump PML Solar 25-145 for 255266 unit. May only be used in conjunction with controller featuring PWM control.

CE

| Code | Notes | | |
|---|---|---|---|
| F0000565 | PML 25-145 pump, with PWM control only | 1 | - |



### 255

Spare parts for circulation units for 255/256 series.

| Code | Notes | | |
|---|---|---|---|
| **255**003 | flow temperature gauge 0–160 °C | 1 | - |
| **255**004 | return temperature gauge 0–160 °C | 1 | - |
| **255**005 | pressure gauge Ø40, 0–6 bar | 1 | - |

# FITTINGS FOR SOLAR THERMAL SYSTEMS

## Mechanical O-ring seal for solar thermal systems



### 2540

Female fitting, mechanical O-Ring seal for solar thermal systems.
**For annealed copper, hard copper, brass, mild steel and stainless steel pipes**.
Black nickel-plated nut.

Maximum working pressure: 16 bar
Medium temperature range: -30–160 °C
Maximum percentage of glycol: 50 %
Medium: water, glycol solutions

| Code | Connection | Pipe diameter | | |
|---|---|---|---|---|
| **254055** | 3/4" F | Ø 15 | 1 | 25 |
| **254058** | 3/4" F | Ø 18 | 1 | 25 |
| **254052** | 3/4" F | Ø 22 | 1 | 25 |
| **254062** | 1" F | Ø 22 | 1 | 25 |
| **254068** | 1" F | Ø 28 | 1 | 10 |



### 2543

Coupling sleeve, mechanical O-Ring seal for solar thermal systems.
**For annealed copper, hard copper, brass, mild steel and stainless steel pipes**.
Black nickel-plated nut.

Maximum working pressure: 16 bar
Medium temperature range: -30–160 °C
Maximum percentage of glycol: 50 %
Medium: water, glycol solutions

| Code | Pipe diameter | | |
|---|---|---|---|
| **254305** | Ø 15 | 1 | 25 |
| **254308** | Ø 18 | 1 | 25 |
| **254302** | Ø 22 | 1 | 25 |



### 2544

Male fitting, mechanical O-Ring seal for solar thermal systems.
**For annealed copper, hard copper, brass, mild steel and stainless steel pipes**.
Black nickel-plated nut.

Maximum working pressure: 16 bar
Medium temperature range: -30–160 °C
Maximum percentage of glycol: 50 %
Medium: water, glycol solutions

| Code | Connection | Pipe diameter | | |
|---|---|---|---|---|
| **254455** | 3/4" M | Ø 15 | 1 | 25 |
| **254458** | 3/4" M | Ø 18 | 1 | 25 |
| **254452** | 3/4" M | Ø 22 | 1 | 25 |
| **254465** | 1" M | Ø 15 | 1 | 25 |
| **254462** | 1" M | Ø 22 | 1 | 25 |



### 2545

Elbow coupling sleeve, mechanical O-Ring seal for solar thermal systems.
**For annealed copper, hard copper, brass, mild steel and stainless steel pipes**.
Black nickel-plated nut.

Maximum working pressure: 16 bar
Medium temperature range: -30–160 °C
Maximum percentage of glycol: 50 %
Medium: water, glycol solutions

| Code | Pipe diameter | | |
|---|---|---|---|
| **254505** | Ø 15 | 1 | 25 |
| **254508** | Ø 18 | 1 | 25 |
| **254502** | Ø 22 | 1 | 25 |



### 2546

Elbow coupling sleeve, mechanical O-Ring seal for solar thermal systems.
**For annealed copper, hard copper, brass, mild steel and stainless steel pipes**.
Black nickel-plated nut.

Maximum working pressure: 16 bar
Medium temperature range: -30–160 °C
Maximum percentage of glycol: 50 %
Medium: water, glycol solutions

| Code | Pipe diameter | | |
|---|---|---|---|
| **254602** | Ø 22 | 1 | 20 |



### 2547

Male elbow fitting, mechanical O-Ring seal for solar thermal systems.
**For annealed copper, hard copper, brass, mild steel and stainless steel pipes**.
Black nickel-plated nut.

Maximum working pressure: 16 bar
Medium temperature range: -30–160 °C
Maximum percentage of glycol: 50 %
Medium: water, glycol solutions

| Code | Connection | Pipe diameter | | |
|---|---|---|---|---|
| **254755** | 3/4" M | Ø 15 | 1 | 25 |
| **254758** | 3/4" M | Ø 18 | 1 | 25 |
| **254752** | 3/4" M | Ø 22 | 1 | 25 |



### 2548

Female elbow fitting, mechanical O-Ring seal for solar thermal systems.
**For annealed copper, hard copper, brass, mild steel and stainless steel pipes**.
Black nickel-plated nut.

Maximum working pressure: 16 bar
Medium temperature range: -30–160 °C
Maximum percentage of glycol: 50 %
Medium: water, glycol solutions

| Code | Connection | Pipe diameter | | |
|---|---|---|---|---|
| **254855** | 3/4" F | Ø 15 | 1 | 25 |
| **254858** | 3/4" F | Ø 18 | 1 | 25 |
| **254852** | 3/4" F | Ø 22 | 1 | 25 |



## 2540

Plug for Ø 22 copper pipe.

| Code | Pipe diameter | | |
|---|---|---|---|
| **2540**02 | Ø 22 | 1 | 25 |

## Three-piece union fitting



## 588

Three-piece union fitting for solar thermal systems.
Black nickel-plated nut.

Maximum working pressure: 16 bar
Medium temperature range: -30–160 °C
Maximum percentage of glycol: 50 %
Medium: water, glycol solutions

| Code | Connection 1 | Connection 2 | | |
|---|---|---|---|---|
| **588**052 | 3/4″ F | 3/4″ M | 1 | 25 |
| **588**062 | 1″ F | 1″ M | 1 | 20 |

# DIRECT HEAT METER

## Turbine heat meter for solar systems

## 75025
## CONTECA EASY SOLAR

Compact direct heat meter for heating solar systems.
The metering module is supplied complete with:
- pair of temperature probes with immersion pockets;
- Y pockets for immersion probes;
- electronic integrator with LCD display.

Local reading via LCD display/centralised reading via BUS transmission.

Medium temperature range: 2–120 °C
Nominal pressure: PN 16
Accuracy class: 3
Maximum percentage of glycol: 50 %
Probe/cable length: 1,9 m
Electric supply: 24 V AC
Running power consumption: 1 W
Protection class: IP 54
Communication protocol: M-Bus on RS485



CE 2014/32/UE (MI004)

| Code | Connection | Nominal flow rate ($m^3/h$) | Minimum flow rate (Qi) (l/h) | Measure type | | |
|---|---|---|---|---|---|---|
| **75025**4 | 1/2″ M | 1,5 | 30 | single nozzle | 1 | - |
| **75025**5 | 3/4″ M | 2,5 | 50 | single nozzle | 1 | - |
| **75025**6 | 1″ M | 3,5 | 70 | multi-nozzle | 1 | - |
| **75025**7 | 1 1/4″ M | 6 | 120 | multi-nozzle | 1 | - |
| **75025**8 | 1 1/2″ M | 10 | 200 | multi-nozzle | 1 | - |
| **75025**9 | 2″ M | 15 | 300 | multi-nozzle | 1 | - |

# SHUT-OFF AND BALANCING VALVES FOR SOLAR THERMAL SYSTEMS

## Balancing valves for solar thermal systems



### 258

Balancing valve with flow meter, for solar thermal systems.
Direct reading of flow rate.
Ball valve for flow rate adjustment.
Graduated scale flow meter with magnetic movement flow rate indicator.
**With insulation**.
PATENT

Maximum working pressure: 10 bar
Medium temperature range: -30–130 °C
Maximum percentage of glycol: 50 %
Medium: water, glycol solutions
Finish: chrome plated
Material: brass

| Code | Connection | Flow rate working range (l/min) | | |
|---|---|---|---|---|
| **258**503 | 3/4" F | 2–7 | 1 | 5 |
| **258**523 | 3/4" F | 7–28 | 1 | 5 |
| **258**533 | 3/4" F | 3–10 | 1 | 5 |
| **258**603 | 1" F | 10–40 | 1 | 5 |

## Shut-off valves for solar thermal systems



### 240

Ball valve for solar thermal system, AISI 304 stainless steel.
AISI 304 stainless steel basket.

Medium temperature range: -30–200 °C
Nominal pressure: PN 63
Maximum percentage of glycol: 50 %
Medium: glycol solutions, water
Material: stainless steel

| Code | Connection | | |
|---|---|---|---|
| **240**400 | 1/2" F | 1 | 5 |
| **240**500 | 3/4" F | 1 | 5 |
| **240**600 | 1" F | 1 | 5 |

**Application diagram of heat meter 75025 series and balancing valve 258 series**

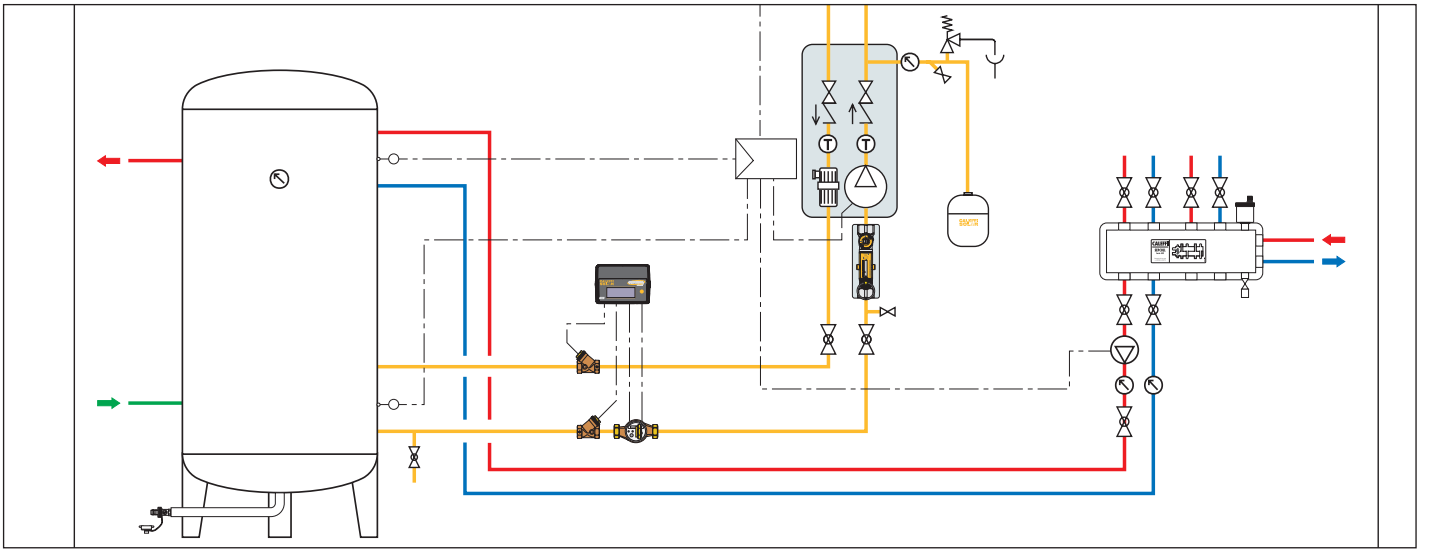

# ZONE/DIVERTER VALVES

## Zone/diverter ball valves (three-way)



### 6443

Motorised three-way ball diverter valve.
Complete with **three-point control** actuator.
**With auxiliary microswitch**.

Maximum working pressure: 10 bar
Medium temperature range: -5–110 °C
Ambient temperature range: 0–55 °C
△p max.: 10 bar
Protection class: IP 54
Supply cable length: 1 m
Auxiliary microswitch contact rating (230 V): 0,8 A
Operating time: 10 s
Rotation: 90°

| Code | Connection | Electric supply | Kv ($m^3/h$) | | |
|---|---|---|---|---|---|
| **644**346 | 1/2" M | 230 V AC | 3,9 | 1 | 5 |
| **644**356 | 3/4" M | 230 V AC | 3,9 | 1 | 5 |
| **644**357 | 3/4" M | 230 V AC | 8,6 | 1 | 5 |
| **644**366 | 1" M | 230 V AC | 9,0 | 1 | 5 |
| **644**348 | 1/2" M | 24 V AC | 3,9 | 1 | 5 |
| **644**358 | 3/4" M | 24 V AC | 3,9 | 1 | 5 |
| **644**359 | 3/4" M | 24 V AC | 8,6 | 1 | 5 |
| **644**368 | 1" M | 24 V AC | 9,0 | 1 | 5 |

# MOTORISED DIVERTER VALVE FOR SOLAR THERMAL SYSTEMS

## Thermostatic diverter valves for solar thermal systems



### 2620

Thermostatic diverter valve for solar thermal systems.

Medium temperature range: 2–100 °C
Maximum working pressure: 10 bar
Material: dezincification resistant brass DR

| Code | Connection | Adjustment temperature (°C) | Kv ($m^3/h$) | | |
|---|---|---|---|---|---|
| **262040** | 1/2" M | 35–55 | 1,5 | 1 | 10 |
| **262050** | 3/4" M | 35–55 | 1,7 | 1 | 10 |



### 2620

Thermostatic diverter valve for solar thermal systems.

Maximum working pressure: 10 bar
Medium temperature range: 2–100 °C
Temperature setting: 45 °C
Material: dezincification resistant brass DR
Finish: nickel plated

| Code | Connection | Adjustment temperature (°C) | Kv ($m^3/h$) | | |
|---|---|---|---|---|---|
| **262060** | 1" M | 38–52 | 2,6 | 1 | 5 |

**Application diagram of thermostatic mixing valve 2521 series**

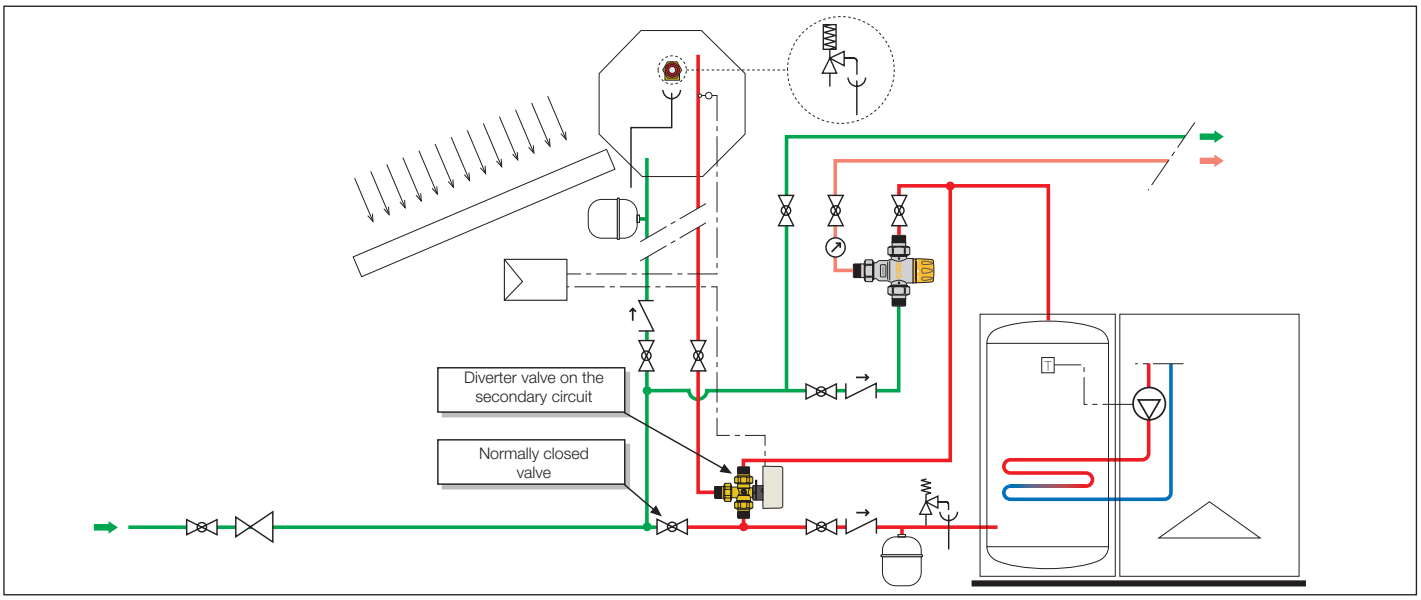

# THERMOSTATIC MIXING VALVE FOR SOLAR THERMAL SYSTEMS

## Solar thermostatic mixing valve for domestic applications



### 2521

Adjustable thermostatic mixing valve for solar thermal systems.

Maximum working pressure: 14 bar
Medium temperature range: 2–100 °C
Material: bronze
Finish: nickel plated

| Code | Connection | Adjustment temperature (°C) | Kv ($m^3/h$) | | |
|---|---|---|---|---|---|
| **252**140 | 1/2" M | 30–65 | 2,6 | 1 | 10 |
| **252**150 | 3/4" M | 30–65 | 2,6 | 1 | 10 |



### 2521

Adjustable thermostatic mixing valve.
For solar thermal systems.
With check valves.

Maximum working pressure: 14 bar
Medium temperature range: 2–100 °C
Material: dezincification resistant brass DR "low lead"
Finish: nickel plated

| Code | Connection | Adjustment temperature (°C) | Kv ($m^3/h$) | | |
|---|---|---|---|---|---|
| **252**153 | 3/4" M | 30–65 | 2,6 | 1 | 10 |



### 2527

Adjustable anti-scald thermostatic mixing valve, for solar thermal systems.
With check valves and strainers.
High thermal performance device **with anti-scald safety function**.
Performance to standards NF 079 doc. 8, EN 15092, EN 1111, EN 1287.

Maximum working pressure: 10 bar
Medium temperature range: 2–100 °C
Material: brass

| Code | Connection | Adjustment temperature (°C) | Kv ($m^3/h$) | | |
|---|---|---|---|---|---|
| **252**714 | 1/2" M | 35–55 | 1,5 | 1 | 10 |
| **252**713 | 3/4" M | 35–55 | 1,7 | 1 | 10 |



### 2522

High performance adjustable anti-scald tempering valve **with check valves and strainers at the inlets**.
Suitable for solar and instantaneous hot water systems.
**Certification AS 4032.1**.

Maximum working pressure: 14 bar
Medium temperature range: 2–100 °C
Material: dezincification resistant brass DR "low lead"

| Code | Connection | DN | Adjustment temperature (°C) | Kv ($m^3/h$) | | |
|---|---|---|---|---|---|---|
| **252**212HP AUS | 1/2" M | DN 15 | 35–55 | 1,5 | 1 | 10 |
| **252**219HP AUS | 3/4" M | DN 20 | 30–50 | 1,7 | 1 | 5 |

## Solar thermostatic mixing valve for commercial applications



### 2521

Thermostatic mixing valve for centralised solar thermal systems.
Composite anti-scale internal regulator.

Maximum working pressure: 14 bar
Medium temperature range: 2–100 °C
Material: dezincification resistant brass DR

| Code | Connection | Adjustment temperature (°C) | Kv ($m^3/h$) | | |
|---|---|---|---|---|---|
| **252**151 | 3/4" M | 35–65 | 4,5 | 1 | - |
| **252**160 | 1" M | 35–65 | 5,5 | 1 | - |
| **252**170 | 1 1/4" M | 35–65 | 7,6 | 1 | - |
| **252**180 | 1 1/2" M | 35–65 | 11,0 | 1 | - |
| **252**190 | 2" M | 35–65 | 13,3 | 1 | - |



### 2523

Thermostatic mixing valve with interchangeable cartridge for solar thermal systems.

Maximum working pressure: 14 bar
Medium temperature range: 2–110 °C
Material: brass

| Code | Connection | Adjustment temperature (°C) | Kv ($m^3/h$) | | |
|---|---|---|---|---|---|
| **252**340 | 1/2" M | 30–65 | 4,0 | 1 | - |
| **252**350 | 3/4" M | 30–65 | 4,5 | 1 | - |
| **252**360 | 1" M | 30–65 | 6,9 | 1 | - |
| **252**370 | 1 1/4" M | 30–65 | 9,1 | 1 | - |
| **252**380 | 1 1/2" M | 35–65 | 14,5 | 1 | - |
| **252**390 | 2" M | 35–65 | 19,0 | 1 | - |

# Solar thermostatic mixing valve for point of use

## 2522

Adjustable thermostatic mixing valve **with check valves and strainers**, for solar thermal systems.
Enhanced thermal performance device **with anti-scald safety function**.
**With override function for thermal disinfection.**
**Certification AS 4032.1**.

Maximum working pressure: 14 bar
Medium temperature range: 2–100 °C
Material: dezincification resistant brass DR "low lead"



Pb LOW LEAD

Lead Free AS 4032.1 WMKA02466
AS 1357.1/2 WMK25724
NSW HEALTH APPROVED DEPARTMENT

| Code | Connection | Notes | DN | Adjustment temperature (°C) | Kv ($m^3/h$) | | |
|---|---|---|---|---|---|---|---|
| **2522**12TMF AUS | 1/2" M | without union | DN 15 | 30–50 | 1,3 | 1 | 10 |
| **2522**19TMF AUS | 3/4" M | - | DN 20 | 30–50 | 1,4 | 1 | 6 |

Pb LOW LEAD

## 2522



Adjustable thermostatic mixing valve with check valves and strainers, for solar thermal systems.
Enhanced thermal performance device with anti-scald safety function.
**Certification AS 4032.1**.

Maximum working pressure: 14 bar
Medium temperature range: 2–100 °C
Material: dezincification resistant brass DR "low lead"

Lead Free AS 4032.1 WMKA02466
NSW HEALTH APPROVED DEPARTMENT

| Code | Connection | DN | Adjustment temperature (°C) | Kv ($m^3/h$) | | |
|---|---|---|---|---|---|---|
| **2522**25TM AUS | 1" M | DN 25 | 30–50 | 3 | 1 | 5 |

# SOLAR STORAGE-TO-BOILER CONNECTION KIT

## Solar storage-to-boiler motorised connection kit

### 264 SOLARNOCAL

Solar storage-to-boiler connection kit, **without thermal integration**.
**Three-contact type actuator**.
Complete with:
- anti-scald thermostatic mixing valve with knob, for solar systems;
- inlet strainers and check valves;
- diverter valve with three-contact actuator and auxiliary microswitch;
- thermostat with probe to actuate diverter valves in solar systems;
- temperature display;
- protective pre-formed shell cover. Mixing valve-valve coupling with adjustable inlet and outlet connection positions.

**With auxiliary microswitch**.

Maximum working pressure: 10 bar
Medium temperature range: 5–110 °C
Adjustment temperature range: 35–55 °C
Electric supply: 230 V AC
Material: dezincification resistant brass DR



| Code | Connection | | |
|---|---|---|---|
| **264**352 | 3/4" M | 1 | - |

### 265 SOLARINCAL

Solar storage-to-boiler connection kit, with thermal integration.
Complete with:
- anti-scald thermostatic mixing valve with knob, for solar systems;
- inlet strainers and check valves;
- diverter valve with three-contact actuator and auxiliary microswitch;
- thermostat with probe to actuate diverter valves in solar systems;
- temperature display;
- protective pre-formed shell cover.
- Mixing valve-valve coupling with adjustable inlet and outlet connection positions.

**With auxiliary microswitch**.

Maximum working pressure: 10 bar
Medium temperature range: 5–110 °C
Adjustment temperature range: 35–55 °C
Electric supply: 230 V AC
Material: dezincification resistant brass DR



| Code | Connection | | |
|---|---|---|---|
| **265**352 | 3/4" M | 1 | - |

### 265

265 series kit without thermostat and probe.



| Code | Connection | | |
|---|---|---|---|
| **265**359 | 3/4" M | 1 | - |

**Application diagram of SOLARNOCAL kit 264 series**

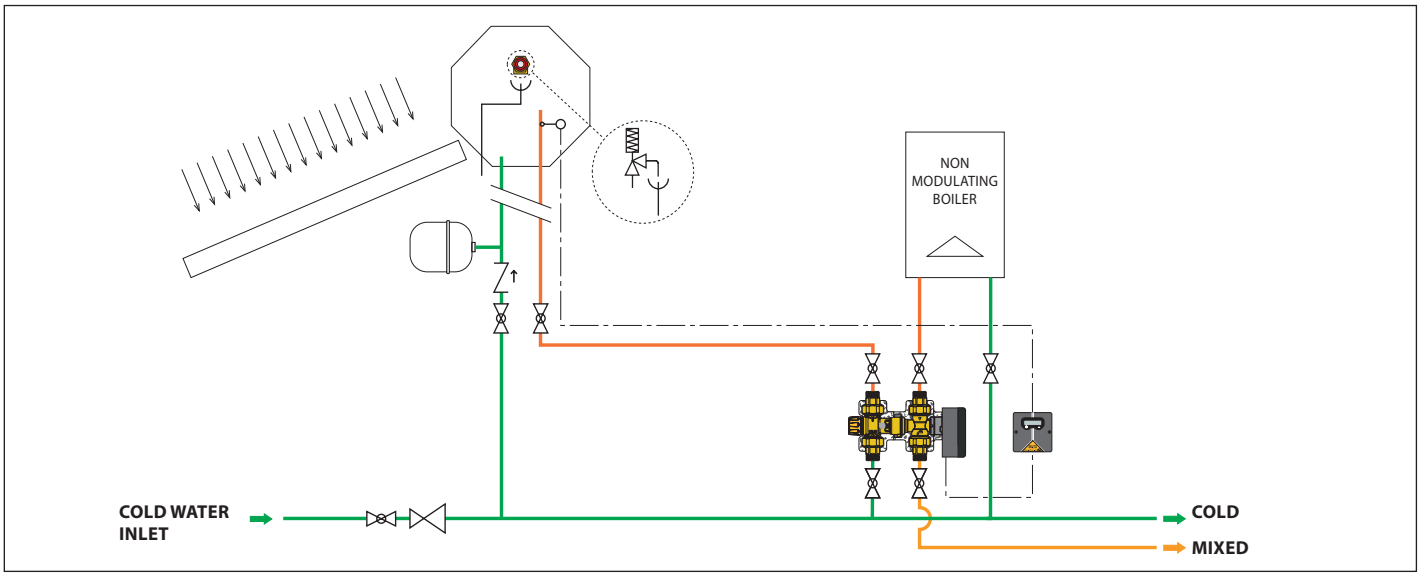


**Application diagram of SOLARINCAL kit 265 series**

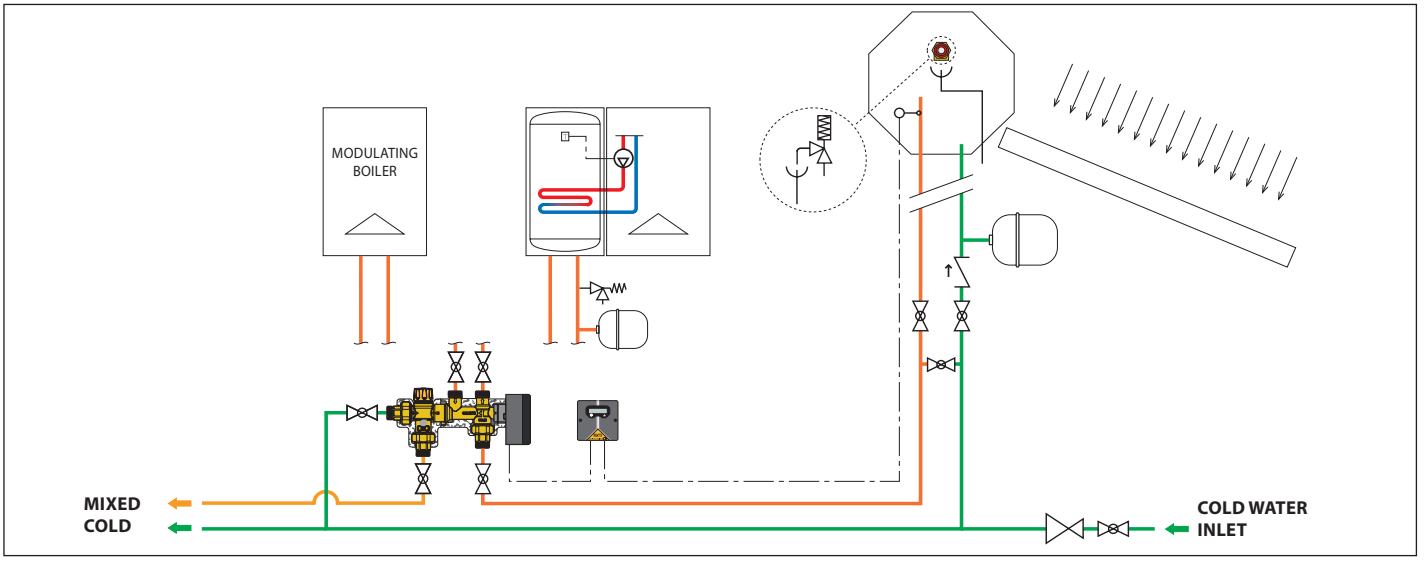


**Application diagram of SOLARINCAL kit 265 series with recirculation system**

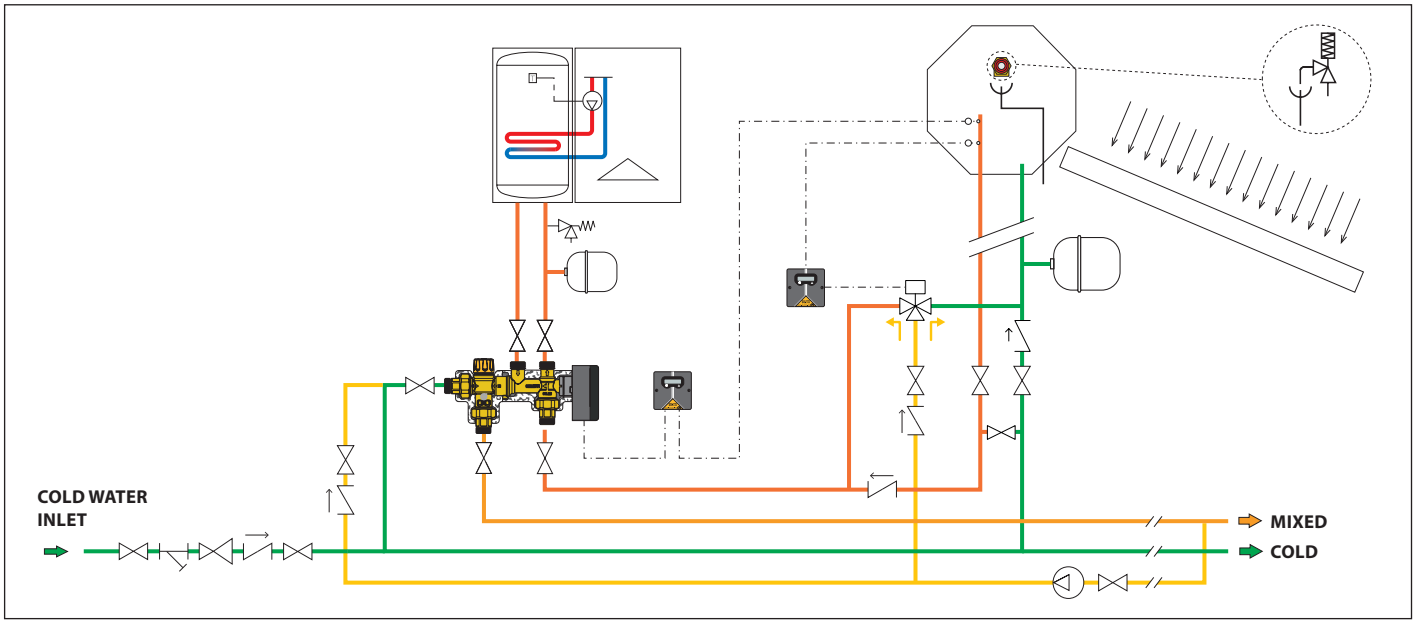

## Solar storage-to-boiler thermostatic connection kit



### 262 SOLARINCAL-T

Solar storage-to-boiler connection kit, with thermal integration.
Complete with:
- anti-scald thermostatic mixing valve with knob, for solar systems;
- inlet check valve;
- thermostatic diverter valve;
- thermostatic control device;
- protective pre-formed shell cover.

Performance according to the NF 079 doc. 8, EN 15092, EN 1111, EN 1287.

Maximum working pressure: 10 bar
Medium temperature range: 2–100 °C
Adjustment temperature range: 35–55 °C
Diverting valve set: 45 °C
Material: dezincification resistant brass DR

| Code | Connection | | |
|---|---|---|---|
| **262**350 | 3/4" M | 1 | - |

### 263 SOLARINCAL-T PLUS



Solar storage-to-boiler connection kit, with thermal integration.
Complete with:
- anti-scald thermostatic mixing valve with knob, for solar systems;
- inlet check valve;
- thermostatic diverter valve;
- thermostatic control device;
- protective pre-formed shell cover.

Performance according to the NF 079 doc. 8, EN 15092, EN 1111, EN 1287.
PATENT

Maximum working pressure: 10 bar
Medium temperature range: 2–100 °C
Adjustment temperature range: 35–55 °C
Diverting valve set: 45 °C
Material: dezincification resistant brass DR

| Code | Connection | | |
|---|---|---|---|
| **263**350 | 3/4" M | 1 | - |



### 262 SOLARINCAL-T

Solar storage-to-boiler connection kit, **with thermal integration**.
**Without protective cover**.
Complete with:
- anti-scald thermostatic mixing valve with knob, for solar systems;
- inlet check valve;
- thermostatic diverter valve;
- thermostatic control device;

Without protective cover.
Performance to standards NF 079 doc. 8, EN 15092, EN 1111, EN 1287.

Maximum working pressure: 10 bar
Medium temperature range: 2–100 °C
Adjustment temperature range: 35–55 °C
Diverting valve set: 45 °C
Material: dezincification resistant brass DR

| Code | Connection | | |
|---|---|---|---|
| **262**342 | 1/2" M | 1 | - |

**Application diagram of kit SOLARINCAL-T kit 262 series**

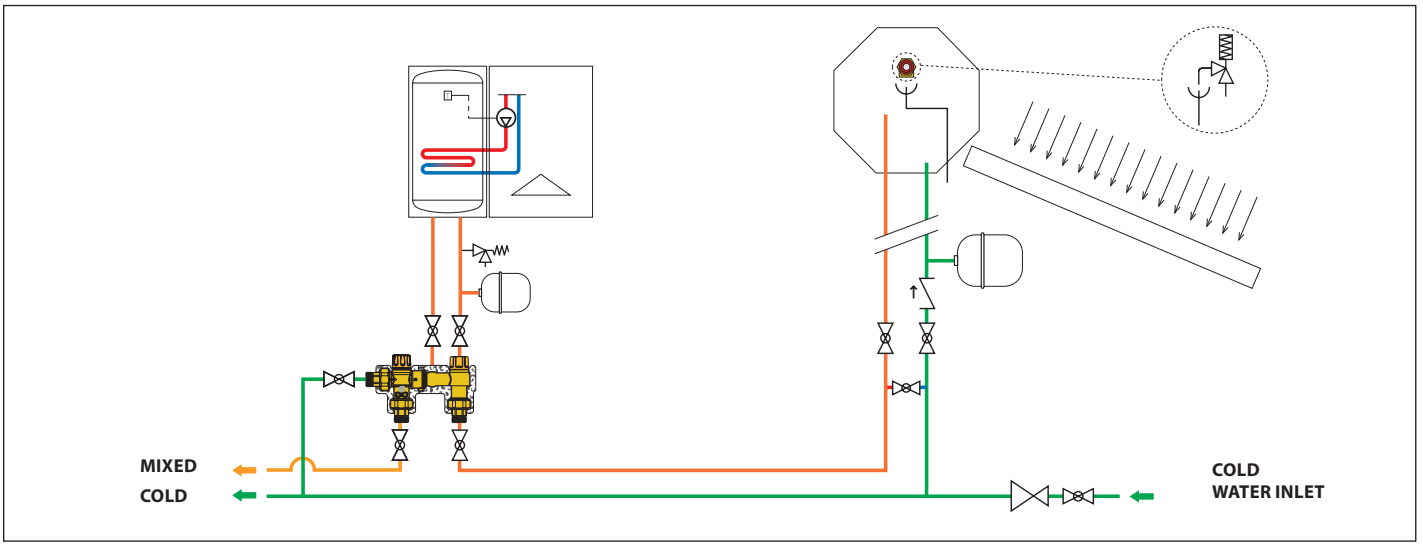


**Application diagram of kit SOLARINCAL-T PLUS kit 263 series**

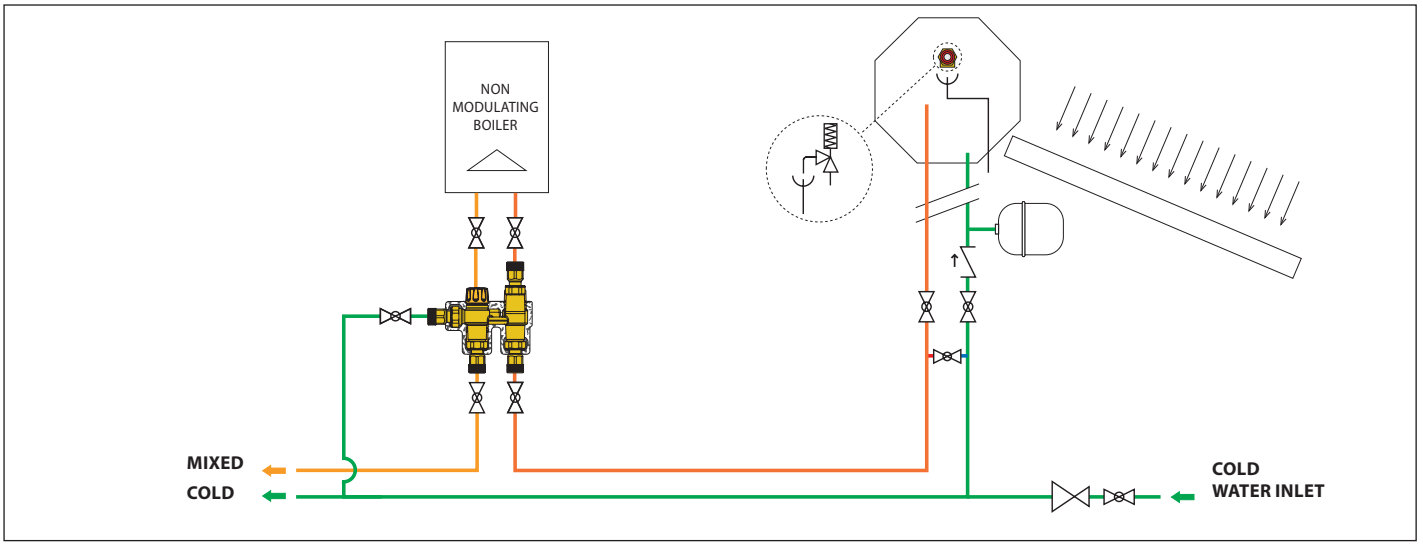


**Application diagram of kit SOLARINCAL-T PLUS with recirculation system**

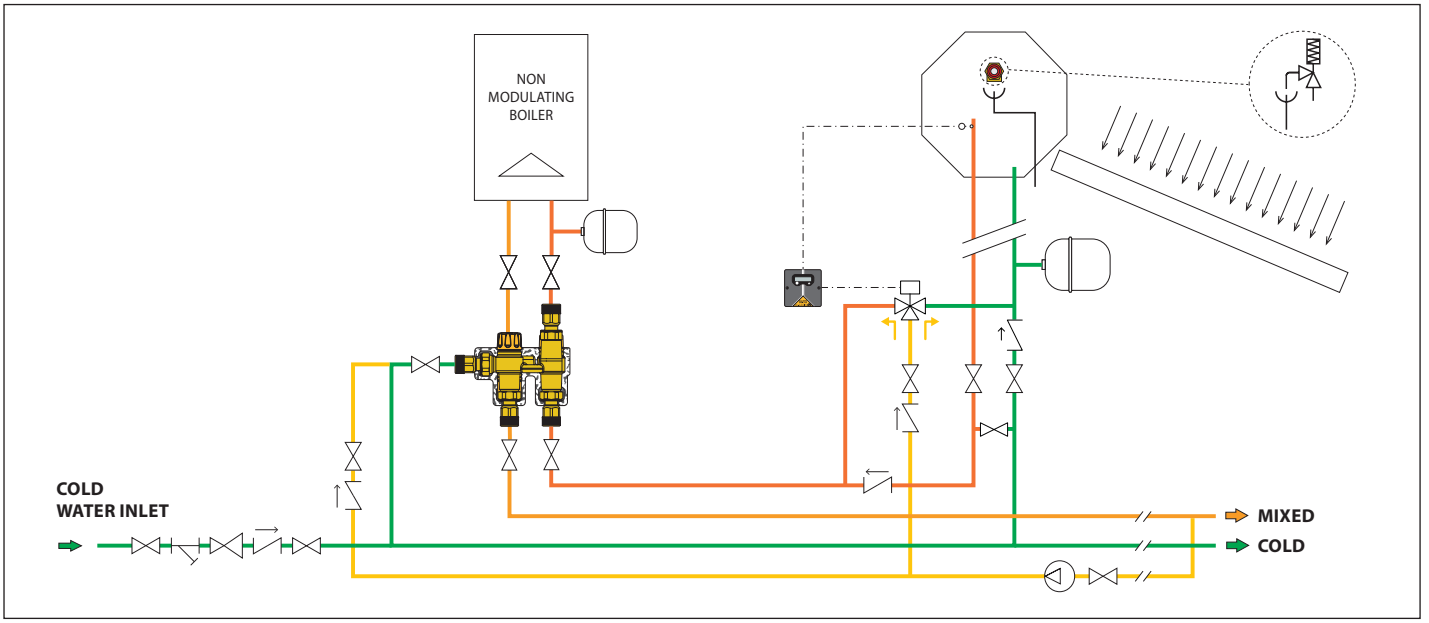

# Accessories and spare parts for connection kit



Spare mixing valve for 262 and 265 series.

| Code | | | |
|---|---|---|---|
| F29384 | | 1 | - |



Spare three-point control actuator.

Control signal: 3 point
Running power consumption: 4 VA
Protection class: IP 54
Ambient temperature range: 0–55 °C
Supply cable length: 1 m
Material: technopolymer
Operating time: 10 s
Rotation: 90°

| Code | Electric supply | | |
|---|---|---|---|
| 265002 | 230 V AC | 1 | 10 |



## 265

Thermostat with display showing storage temperature.
For 264 and 265 series devices.

Adjustment temperature range: 25–50 °C
Electric supply: 230 V AC
Protection class: IP 42
Temperature setting: 45 °C

CE

| Code | | | |
|---|---|---|---|
| **265**001 | | 1 | - |



3-contact switching relay box.

| Code | Notes | | |
|---|---|---|---|
| F29525 | box with 3-contact changeover relay | 1 | - |



Contact probe Ø15 mm.

| Code | | | |
|---|---|---|---|
| F29466 | | 1 | - |



Probe pocket Ø15 mm.

| Code | | | |
|---|---|---|---|
| F29467 | | 1 | - |



Spare probe Ø 6 mm.

| Code | Notes | | |
|---|---|---|---|
| F29399 | electrical servomotor | 1 | - |



Spare parts for connection kit 264 and 265 series.

| Code | Notes | | |
|---|---|---|---|
| F29488 | Probe, Ø6 mm | 1 | - |



## 161

Pt1000 probe, Ø6 mm.

| Code | Notes | Article use | | |
|---|---|---|---|---|
| **161**006 | L 45 mm, L cable 2,5 m | 161010 | 1 | - |
| **161**015 | L 20 mm, L cable 1,5 m | 161010 | 1 | - |



## 161

Pt1000 contact probe for pipes, Ø 6 mm.

| Code | Notes | Article use | | |
|---|---|---|---|---|
| **161**012 | L cable 2,5 m | 161010 | 1 | - |



## 161

Pt1000 probe pocket, size 1/2" M.

| Code | Notes | Article use | | |
|---|---|---|---|---|
| **161**013 | L 60 mm | 161010 | 1 | - |
| **161**014 | L 100 mm | 161010, 150006, 257006 | 1 | - |

# COMPONENTS FOR GEOTHERMAL SYSTEMS

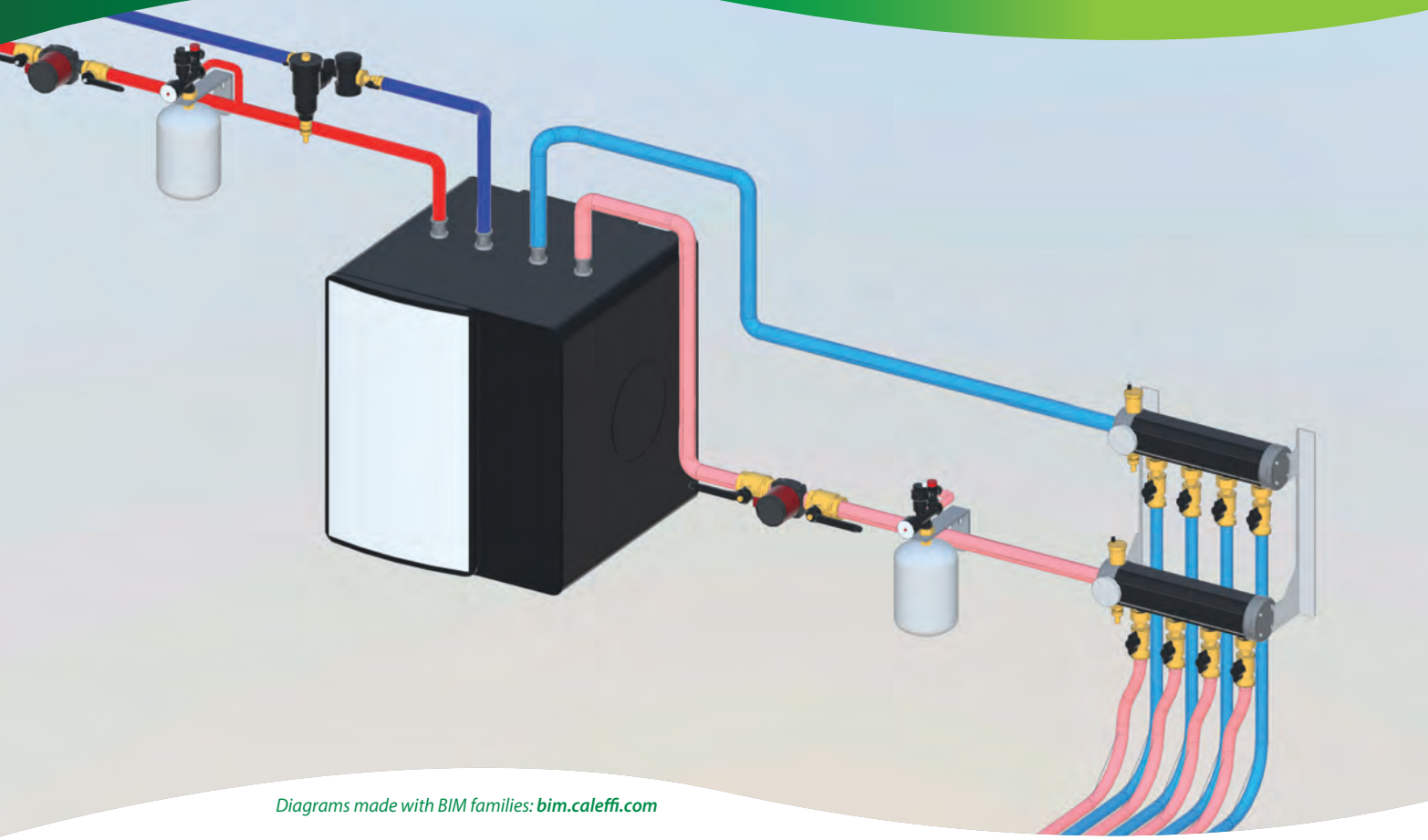

*Diagrams made with BIM families:* ***bim.caleffi.com***

**Preassembled geothermal manifold**
**Geothermal modular manifold**
**Shut-off and balancing valves for geothermal manifold**
**Accessories for geothermal manifold**

# GEOTHERMAL MANIFOLD

## Preassembled geothermal manifold

### 110

Preassembled geothermal manifold.
Complete with:
- automatic air vent;
- Ø80 mm temperature gauges;
- filler/drain cocks;
- composite flow and return manifolds;
- end fitting caps with insulation;
- stainless steel wall mounting brackets;
- set of flow direction and circuit identification labels;
- wall anchors.

Outlet connections with mechanical seal for 112 series balancing valves and 871 series ball valves.

Maximum working pressure: 6 bar
Maximum hydraulic test pressure: 10 bar
Medium temperature range: -10–60 °C
Ambient temperature range: -20–60 °C
Maximum percentage of glycol: 50 %
Medium: water, glycol solutions
Maximum recommended flow rate: 7 $m^3/h$
DN: DN 50



| Code | Connection | Outlet connection | | |
|---|---|---|---|---|
| **110**7B5 | 1 1/4" F | 42 p.2,5 TR - 2 out. | 1 | - |
| **110**7C5 | 1 1/4" F | 42 p.2,5 TR - 3 out. | 1 | - |
| **110**7D5 | 1 1/4" F | 42 p.2,5 TR - 4 out. | 1 | - |
| **110**7E5 | 1 1/4" F | 42 p.2,5 TR - 5 out. | 1 | - |
| **110**7F5 | 1 1/4" F | 42 p.2,5 TR - 6 out. | 1 | - |
| **110**7G5 | 1 1/4" F | 42 p.2,5 TR - 7 out. | 1 | - |
| **110**7H5 | 1 1/4" F | 42 p.2,5 TR - 8 out. | 1 | - |

For more than 8 outlet circuits, see the modular manifold.

## Geothermal modular manifold



### 110

Modular manifold single module in polymer.
Outlet connections with mechanical seal for 112 series balancing valves and 871 series ball valves.

Maximum working pressure: 6 bar
Maximum hydraulic test pressure: 10 bar
Medium temperature range: -10–60 °C
Ambient temperature range: -20–60 °C
Maximum percentage of glycol: 50 %
Medium: water, glycol solutions
DN: DN 50

| Code | Outlet connection | | |
|---|---|---|---|
| **110**700 | 42 p. 2,5 TR - 1 out. | 1 | - |



### 110

Stainless steel tie-rods for assembling modular manifolds.
M8 threaded stainless steel bar.

| Code | Notes | | |
|---|---|---|---|
| **110**012 | for manifold with 2 circuits | 1 | - |
| **110**013 | for manifold with 3 circuits | 1 | - |
| **110**014 | for manifold with 4 circuits | 1 | - |
| **110**015 | for manifold with 5 circuits | 1 | - |
| **110**016 | for manifold with 6 circuits | 1 | - |
| **110**017 | for manifold with 7 circuits | 1 | - |
| **110**018 | for manifold with 8 circuits | 1 | - |
| **110**019 | for manifold with 9 circuits | 1 | - |
| **110**020 | for manifold with 10 circuits | 1 | - |
| **110**021 | for manifold with 11 circuits | 1 | - |
| **110**022 | for manifold with 12 circuits | 1 | - |

## 110

Assembly kit for modular manifolds.
Complete with:
- brass end fitting with automatic air vent, filler/drain cock;
- brass head plug;
- pre-formed shell insulation;
- screws and bolts for rods and bracketing;
- set of flow direction and circuit identification labels;
- temperature gauge with pocket (-30–50 °C);
- 2 seal gaskets

Maximum working pressure: 6 bar
Maximum hydraulic test pressure: 10 bar
Medium temperature range: -10–60 °C
Ambient temperature range: -20–60 °C
Maximum percentage of glycol: 50 %
Medium: water, glycol solutions



| Code | Connection | | |
|---|---|---|---|
| **110**750 | 1 1/4" F | 1 | - |



## 110

Pair of stainless steel brackets to secure modular manifolds.
Complete with screws and wall anchors.
Rapid wall coupling system.
System for rapidly coupling the manifold on the brackets.

| Code | | |
|---|---|---|
| **110**001 | 1 | - |

# Shut-off and balancing valves for geothermal manifold



## 112

Balancing valve with flow meter.
Complete with fitting for polyethylene pipe.
Direct reading of flow rate.
Ball valve for flow rate adjustment.
Graduated scale flow meter with magnetic movement flow rate indicator.

Maximum working pressure: 10 bar
Medium temperature range: -10–40 °C
Ambient temperature range: -20–60 °C
Maximum percentage of glycol: 50 %
Medium: water, glycol solutions
Flow rate regulation range: 0,3-1,2 $m^3/h$
Material: brass

| Code | Manifold connection | Pipe connection | | |
|---|---|---|---|---|
| **112**621 | 42 p.2,5 TR captive nut | Ø 25 | 1 | - |
| **112**631 | 42 p.2,5 TR captive nut | Ø 32 | 1 | - |
| **112**641 | 42 p.2,5 TR captive nut | Ø 40 | 1 | - |

# Accessories for geothermal manifold



## 112

Insulation for balancing valves.
Reaction to fire (DIN 4102): class B2.

Medium temperature range: 0–100 °C
Thickness: 10 mm

| Code | Notes | Article use | | |
|---|---|---|---|---|
| **112**001 | Ø 25 - Ø 32 | 112621, 112631 | 1 | - |
| **112**003 | Ø 40 | 112641 | 1 | - |



## 871

Ball valve complete with fitting for polyethylene pipe.

Maximum working pressure: 16 bar
Medium temperature range: -10–40 °C
Ambient temperature range: -20–60 °C
Maximum percentage of glycol: 50 %
Medium: water, glycol solutions, saline solutions
Material: brass

| Code | Manifold connection | Pipe connection | | |
|---|---|---|---|---|
| **871**025 | 42 p.2,5 TR captive nut | Ø 25 | 1 | - |
| **871**032 | 42 p.2,5 TR captive nut | Ø 32 | 1 | - |
| **871**040 | 42 p.2,5 TR captive nut | Ø 40 | 1 | - |



## 110

Union.
Complete with gasket.

Maximum working pressure: 16 bar
Medium temperature range: 0–40 °C

| Code | Manifold connection | Pipe connection | | |
|---|---|---|---|---|
| **110**050 | 42 p.2,5 TR | 3/4" M | 1 | 20 |
| **110**060 | 42 p.2,5 TR | 1" M | 1 | 20 |

# COMPONENTS FOR BIOMASS SYSTEMS

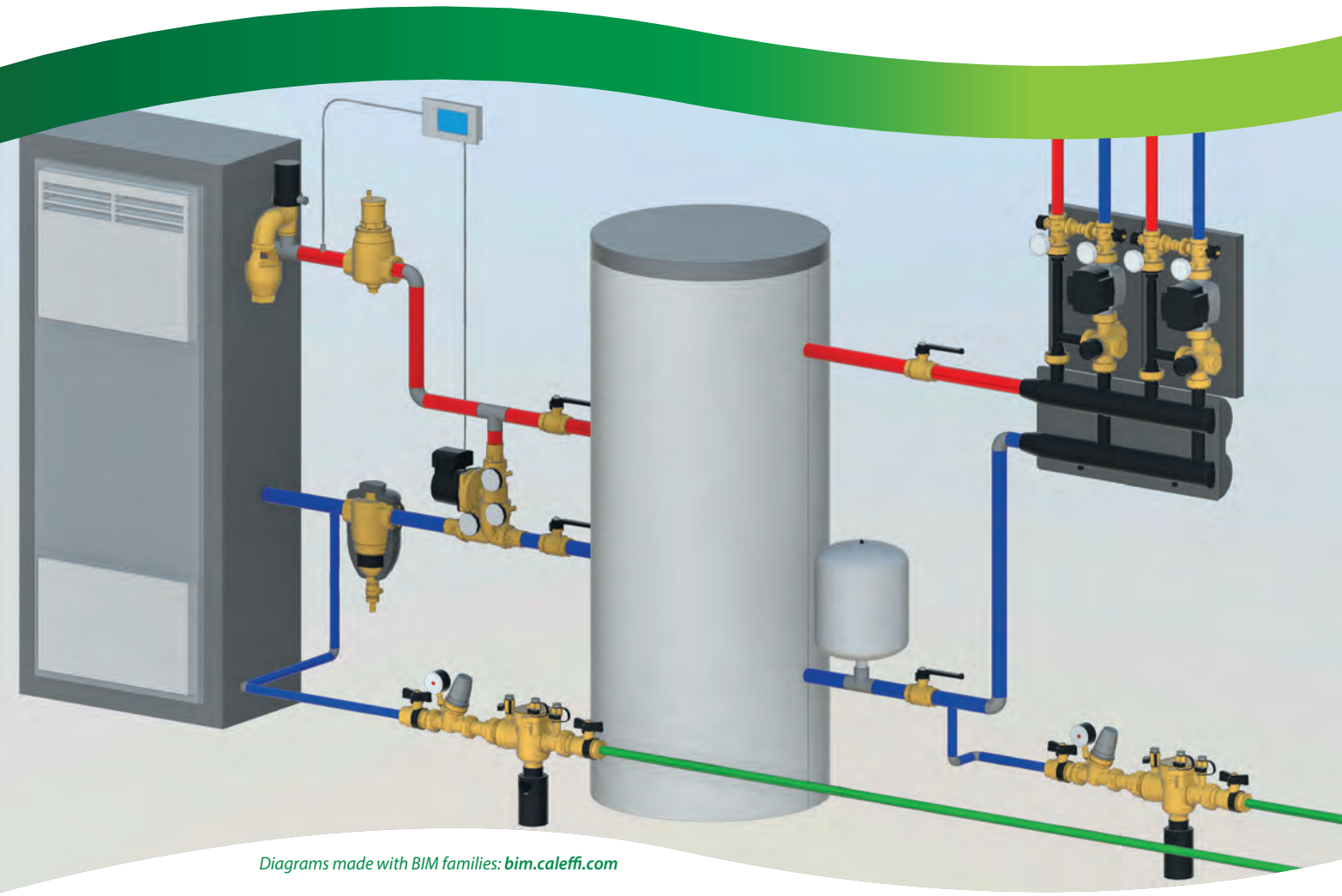

*Diagrams made with BIM families:* ***bim.caleffi.com***

**Temperature safety relief valves**
**Temperature relief valves with automatic filling**
**Draught regulating valve**
**Anti-condensation valve**
**Anti-condensation recirculation and distribution unit**

CALEFFI BIOMASS

# SAFETY RELIEF VALVES FOR BIOMASS SYSTEMS

## Temperature safety relief valves



### 543

Temperature safety relief valve, with double safety sensor.
For solid fuel generators.
Certified to EN 14597.

Maximum working pressure: 10 bar
Medium temperature range: 5–110 °C
Capillary length: 1,3 m
Discharge flow rate with △p=1 bar and T= 110 °C: 3000 l/h

CE 2797 DIN Geprüft

| Code | Connection | Temperature setting (°C) | | |
|---|---|---|---|---|
| **543**513 | 3/4" F | 98 | 1 | 10 |



### 542

Temperature relief valve, with fail-safe action.
Manual reset for burner switch off or alarm activation.
Discharge rating 1 1/2" x 1 1/4" - 136kW; 1 1/2" x 1 1/2" - 419 kW.
Certified and calibrated to INAIL (formerly ISPESL) standards.

Maximum working pressure: 10 bar
Minimum working pressure: 0,3 bar
Medium temperature range: 5–100 °C

CE 2797 INAIL

| Code | Connection | Drain connection | Maximum discharge rating (kW) | Temperature setting (°C) | | |
|---|---|---|---|---|---|---|
| **542**870 | 1 1/2" M | 1 1/4" F | 136 | 98 | 1 | 10 |
| **542**880 | 1 1/2" M | 1 1/2" F | 419 | 99 | 1 | 10 |

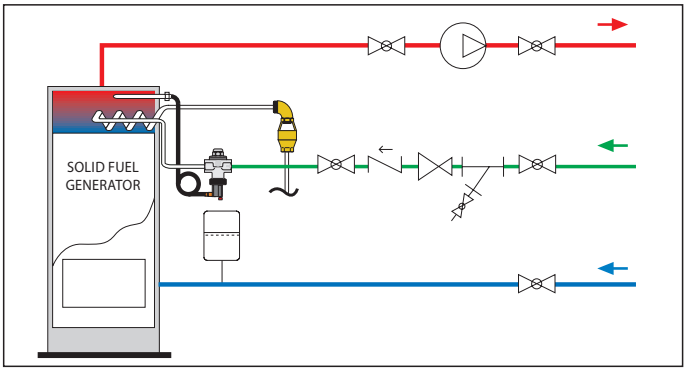


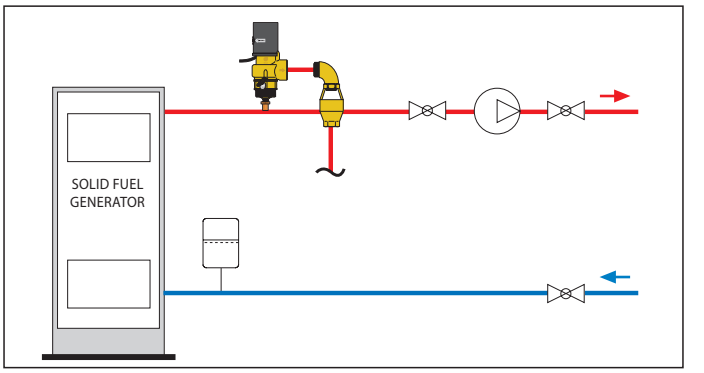




### 543

Temperature safety relief valve, with double safety sensor.
For solid fuel generators.
Certified to EN 14597.

Maximum working pressure: 10 bar
Medium temperature range: 5–110 °C
Capillary length: 1,3 m
Discharge flow rate with △p=1 bar and T= 110 °C: 3000 l/h

CE 2797 DIN Geprüft www.tuv.com ID 0000021744 Hy Cert

| Code | Connection | Temperature setting (°C) | | |
|---|---|---|---|---|
| **543**503 | 3/4" F | 98 | 1 | 10 |

## Temperature relief valves with automatic filling



### 544

Temperature relief valve, with positive action with automatic filling.
For solid fuel generators.

Maximum working pressure: 6 bar
Medium temperature range: 5–110 °C
Ambient temperature range: 1–50 °C
Capillary length: 1,3 m
Discharge flow rate with △p=1 bar and T= 110 °C: 1600 l/h

| Code | Connection | Temperature setting (°C) | | |
|---|---|---|---|---|
| **544**400 | 1/2" F | 100 | 1 | 10 |

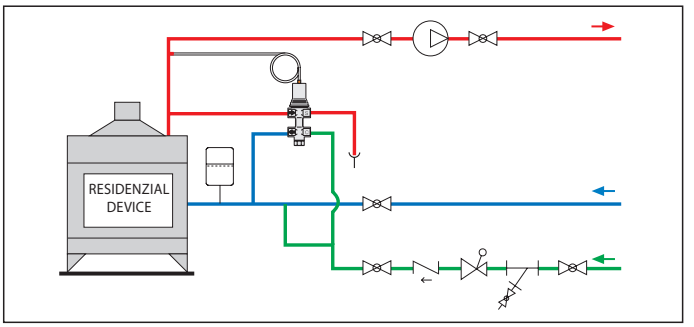




### 544

Temperature relief valve with automatic filling, with knob for manual discharge.
For solid fuel generators.

Maximum working pressure: 6 bar
Medium temperature range: 5–120 °C
Discharge flow rate with △p=1 bar and T= 110 °C: 1800 l/h

| Code | Connection | Temperature setting (°C) | | |
|---|---|---|---|---|
| **544**501 | 3/4" M | 100 | 1 | - |

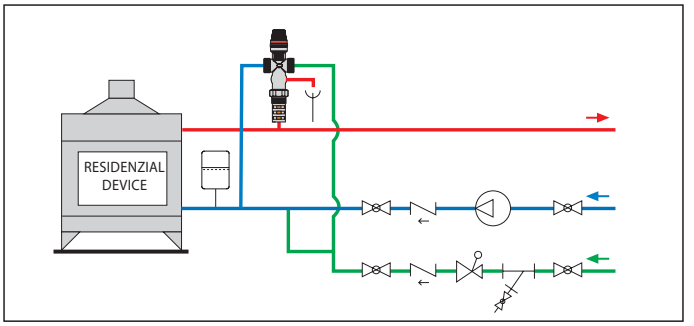


## Draught regulating valve



### 529

Draught regulating valve.
Certified to EN 14597 standard.

Adjustment temperature range: 30–90 °C

| Code | Connection | Length pocket (mm) | | |
|---|---|---|---|---|
| **529**150 | 3/4" M | 58 | 1 | 10 |
| **529**050 | 3/4" M | 58 | 1 | 10 |
| **529**151 | 3/4" M | 78 | 1 | 10 |

# CONTROL DEVICES FOR BIOMASS SYSTEMS

## Anti-condensation valve



### 280

Anti-condensation valve with thermostatic control of the return temperature to solid fuel generators.
By-pass complete closing temperature:
Tmin = Tset +10 °C = Tr.
INTERNATIONAL APPLICATION PENDING

Maximum working pressure: 10 bar
Medium temperature range: 5–100 °C
Maximum percentage of glycol: 50 %
Medium: water, glycol solutions
Material: brass

| Code | Connection | Notes | DN | Kv ($m^3/h$) | | |
|---|---|---|---|---|---|---|
| **280**054 | 3/4" M | - | DN 20 | 3,2 | 1 | 10 |
| **280**055 | 3/4" M | - | DN 20 | 3,2 | 1 | 10 |
| **280**056 | 3/4" M | - | DN 20 | 3,2 | 1 | 10 |
| **280**057 | 3/4" M | - | DN 20 | 3,2 | 1 | 10 |
| **280**264 | 1" M | see note kv | DN 20 | 3,2 | 1 | 10 |
| **280**265 | 1" M | see note kv | DN 20 | 3,2 | 1 | 10 |
| **280**266 | 1" M | see note kv | DN 20 | 3,2 | 1 | 10 |
| **280**267 | 1" M | see note kv | DN 20 | 3,2 | 1 | 10 |
| **280**064 | 1" M | - | DN 25 | 9 | 1 | 5 |
| **280**065 | 1" M | - | DN 25 | 9 | 1 | 5 |
| **280**066 | 1" M | - | DN 25 | 9 | 1 | 5 |
| **280**067 | 1" M | - | DN 25 | 9 | 1 | 5 |
| **280**074 | 1 1/4" M | - | DN 32 | 12 | 1 | 5 |
| **280**075 | 1 1/4" M | - | DN 32 | 12 | 1 | 5 |
| **280**076 | 1 1/4" M | - | DN 32 | 12 | 1 | 5 |
| **280**077 | 1 1/4" M | - | DN 32 | 12 | 1 | 5 |

**Valve selection**

The valve selection should be made according to the Kv value (corresponding to a specific DN body size) and not only according to the threaded connections. Given the system flow rate, the corresponding head losses on the valve should be calculated by using the Kv value. The sum of the head losses on the valve and the head losses of the rest of the system should be compatible with the available head of the generator pump.
Items 1" - DN 20 and 3/4" - DN 20 have the same kv value.



Spare thermostats for anti-condensation valve.

| Code | Notes | Temperature setting (°C) | | |
|---|---|---|---|---|
| F29629 | part number 28005. / 28026. | 45 | 1 | - |
| F29630 | part number 28005. / 28026. | 55 | 1 | - |
| F29631 | part number 28005. / 28026. | 60 | 1 | - |
| F29632 | part number 28005. / 28026. | 70 | 1 | - |
| F29633 | part number 28006. / 28007. (*) | 45 | 1 | - |
| F29634 | part number 28006. / 28007. (*) | 55 | 1 | - |
| F29635 | part number 28006. / 28007. (*) | 60 | 1 | - |
| F29636 | part number 28006. / 28007. (*) | 70 | 1 | - |

Note (*): Also use for 281, 282, 2850, 2851, 2853, 2855 series.

## Anti-condensation recirculation and distribution unit



### 281

Anti-condensation recirculation and distribution unit, with thermostatic control of the return temperature to solid fuel generators.
By-pass complete closing temperature:
Tmin = Tset +10 °C = Tr.
**With insulation**.

Maximum working pressure: 10 bar
Medium temperature range: 5–100 °C
Maximum percentage of glycol: 50 %
Medium: glycol solutions, water
Maximum recommended flow rate: 2 $m^3/h$
Material: brass
DN: DN 25
Type of pump: Para MS/7

CE

| Code | Connection | Temperature setting (°C) | | |
|---|---|---|---|---|
| **281**064WYP | 1" F | 45 | 1 | - |
| **281**065WYP | 1" F | 55 | 1 | - |
| **281**066WYP | 1" F | 60 | 1 | - |
| **281**067WYP | 1" F | 70 | 1 | - |
| **281**074WYP | 1 1/4" F | 45 | 1 | - |
| **281**075WYP | 1 1/4" F | 55 | 1 | - |
| **281**076WYP | 1 1/4" F | 60 | 1 | - |
| **281**077WYP | 1 1/4" F | 70 | 1 | - |

The unit should be selected according to the head avalaible at the unit connections, depending on the DN, and not only according to the threaded connections. Given the system head losses, the available head of the unit pump should be evaluated.

### Application diagram

**System with buffer tank**

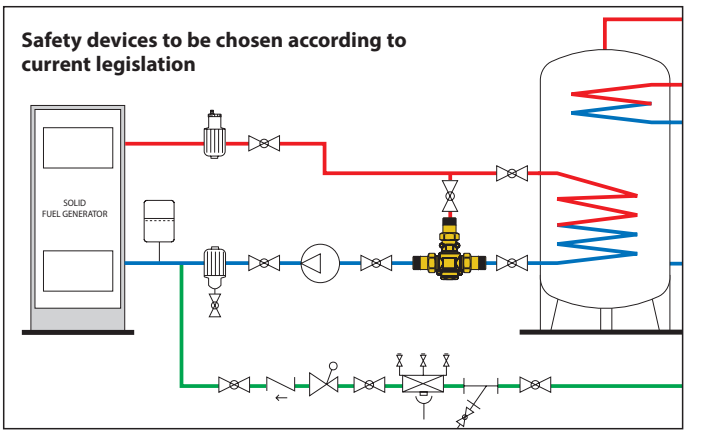

# SPARE PARTS

## FOR SPARE PARTS, PLEASE CONTACT THE APPROPRIATE DEPARTMENT

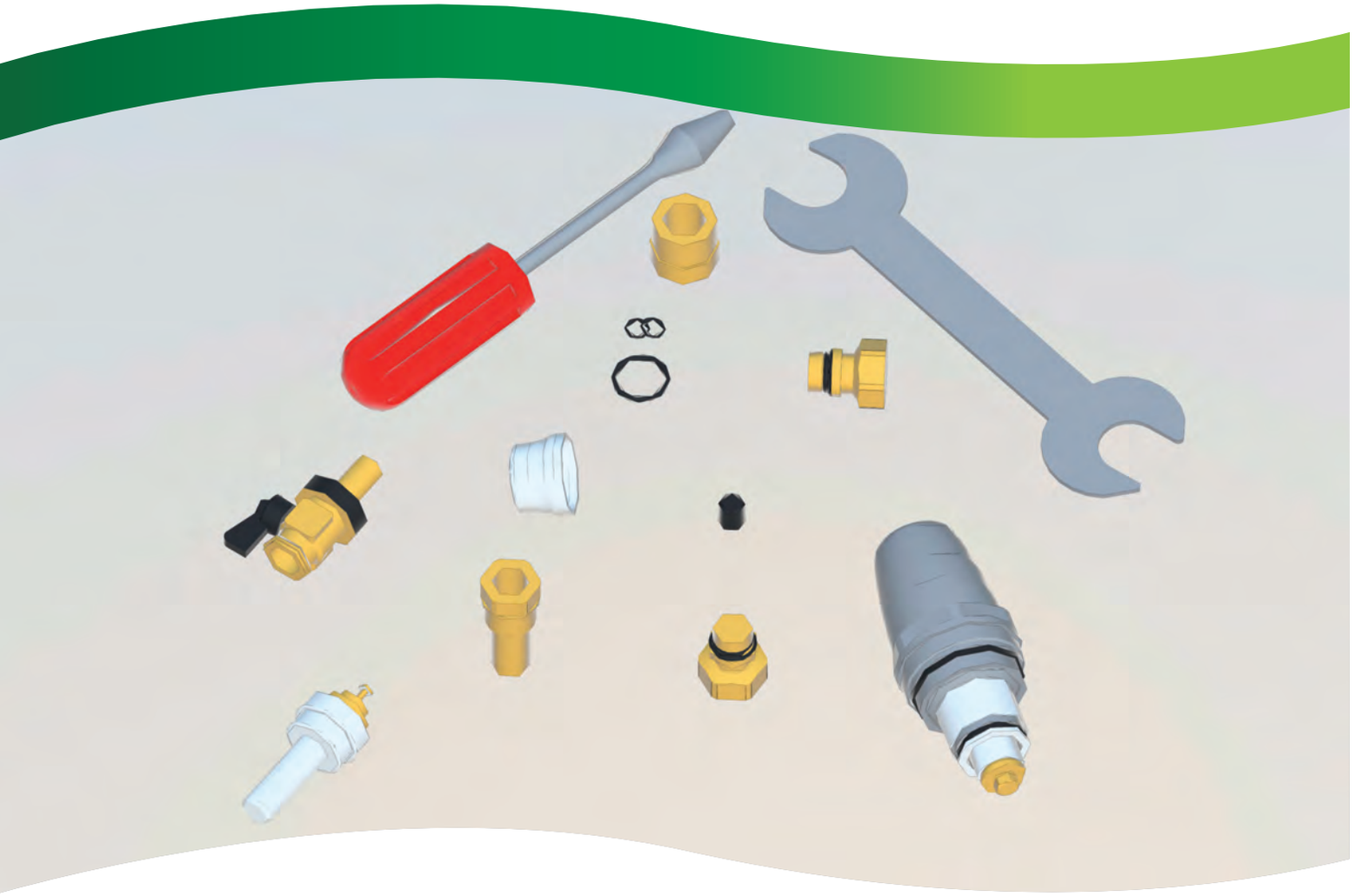

# FITTING COUPLING

PRODUCT DIMENSIONS are available on www.caleffi.com

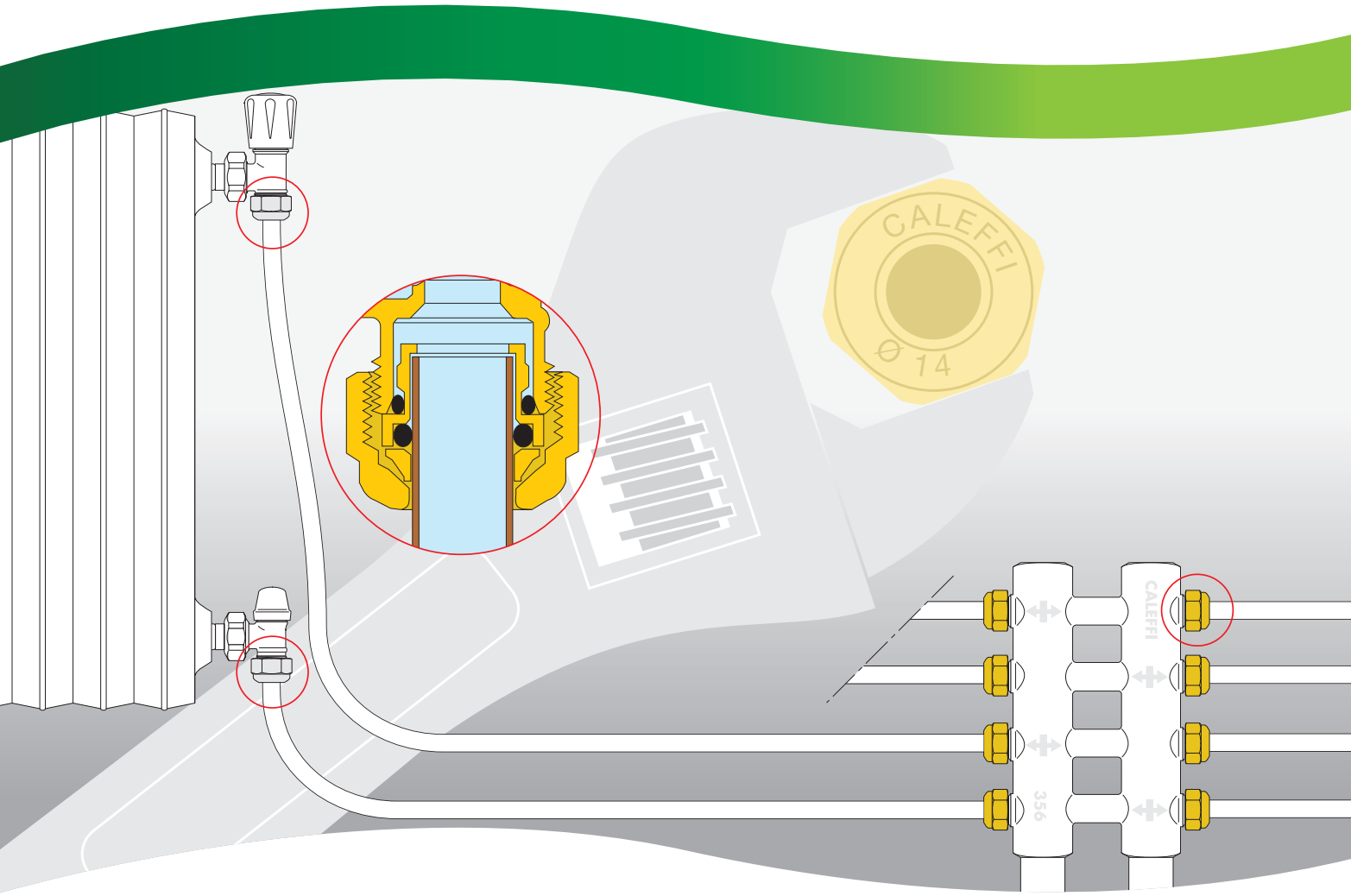

# CHROME PLATED BRASS FITTINGS

## 23 p.1,5 pipes connection



### 6790 DARCAL

Fitting **for multilayer plastic pipe** with continuous high temperature use.

**For a correct use, adjust the multilayer pipe diameter before installation using the Caleffi calibrator 679 series.**

| Code | |
|---|---|
| **679**014 | 23 p.1,5 - Ø 14x2 |
| **679**024 | 23 p.1,5 - Ø 16x2 |
| **679**025 | 23 p.1,5 - Ø 16x2,25 |
| **679**044 | 23 p.1,5 - Ø 18x2 |
| **679**064* | 23 p.1,5 - Ø 20x2 |
| **679**065* | 23 p.1,5 - Ø 20x2,25 |
| **679**066* | 23 p.1,5 - Ø 20x2,5 |
| **679**067* | 23 p.1,5 - Ø 20x2,9 (REHAU pipe) |

* With metal ring

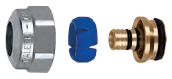

### 6810 DARCAL

Self-adjustable diameter fitting **for single and multilayer plastic pipes**.

| Code | | Ø inside | Ø outside |
|---|---|---|---|
| **681**000 | 23 p.1,5 | 7,5– 8 | 12–14 |
| **681**002 | 23 p.1,5 | 9 – 9,5 | 14–16 |
| **681**001 | 23 p.1,5 | 9,5–10 | 12–14 |
| **681**006 | 23 p.1,5 | 9,5–10 | 14–16 |
| **681**015 | 23 p.1,5 | 10,5–11 | 14–16 |
| **681**017 | 23 p.1,5 | 10,5–11 | 16–18 |
| **681**024 | 23 p.1,5 | 11,5–12 | 14–16 |
| **681**026 | 23 p.1,5 | 11,5–12 | 16–18 |
| **681**035 | 23 p.1,5 | 12,5–13 | 16–18 |
| **681**044 | 23 p.1,5 | 13,5–14 | 16–18 |



### 6810 DARCAL

Self-adjustable diameter fitting **for single and multilayer plastic pipes**. **High chrome finish**.

| Code | | Ø inside | Ø outside |
|---|---|---|---|
| **681**101 | 23 p.1,5 | 9,5–10 | 12–14,4 |
| **681**124 | 23 p.1,5 | 11,5–12 | 14–16,4 |



### 4470

Pre-assembled compression fitting, **for annealed copper**, **hard copper**, **brass**, **mild and stainless steel**. With O-Ring seal.

| Code | |
|---|---|
| **447**010 | 23 p.1,5 - Ø 10 |
| **447**012 | 23 p.1,5 - Ø 12 |
| **447**014 | 23 p.1,5 - Ø 14 |
| **447**015 | 23 p.1,5 - Ø 15 |
| **447**016 | 23 p.1,5 - Ø 16 |



### 4370

Compression fitting, **for annealed copper**, **hard copper**, **brass**, **mild and stainless steel**. With O-Ring seal.

| Code | |
|---|---|
| **437**010 | 23 p.1,5 - Ø 10 |
| **437**012 | 23 p.1,5 - Ø 12 |
| **437**014 | 23 p.1,5 - Ø 14 |
| **437**015 | 23 p.1,5 - Ø 15 |
| **437**016 | 23 p.1,5 - Ø 16 |



### 4371

Compression fitting, **for annealed copper**, **hard copper**, **brass**, **mild and stainless steel**. With O-Ring seal. **High chrome finish**.

| Code | |
|---|---|
| **437**112 | 23 p.1,5 - Ø 12 |
| **437**114 | 23 p.1,5 - Ø 14 |
| **437**115 | 23 p.1,5 - Ø 15 |
| **437**116 | 23 p.1,5 - Ø 16 |



### 4380

Compression fitting, **for copper pipes**. With PTFE seal.

| Code | |
|---|---|
| **438**010 | 23 p.1,5 - Ø 10 |
| **438**012 | 23 p.1,5 - Ø 12 |
| **438**014 | 23 p.1,5 - Ø 14 |
| **438**015 | 23 p.1,5 - Ø 15 |
| **438**016 | 23 p.1,5 - Ø 16 |
| **438**018 | 23 p.1,5 - Ø 18 with metal olive |



### 4390

Fitting for **copper pipe**, with gasket. Chrome plated. **Do not use with valves 232 series**.

| Code | |
|---|---|
| **439**010 | 23 p.1,5 - Ø 10 |
| **439**012 | 23 p.1,5 - Ø 12 |
| **439**014 | 23 p.1,5 - Ø 14 |
| **439**016 | 23 p.1,5 - Ø 16 |

## 23 p.1,5 M - Ø 18

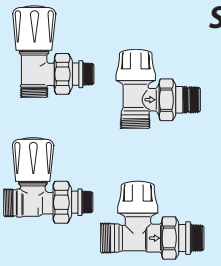

***Series:*** ***338 339 425 426 222 232 223 233 227 237***

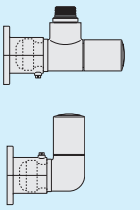

***Series:*** ***4001 4003 4004 4005***

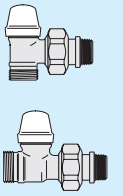

***Series:*** ***340 341 342 343***

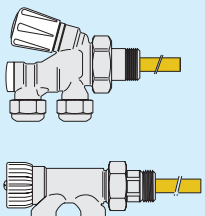

***Series:*** ***456 455 4501 348 452 328***

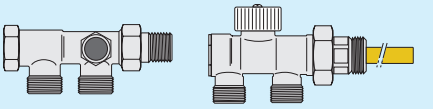



***Series:*** ***382***

# CHROME PLATED BRASS FITTINGS

## 3/4” pipes connection



### 6792 DARCAL

Fitting **for multilayer plastic pipe** with continuous high temperature use.

**For a correct use, adjust the multilayer pipe diameter before installation using the Caleffi calibrator 679 series.**

| Code | | |
|---|---|---|
| **679**264 | 3/4” | - Ø 20x2 |
| **679**265 | 3/4” | - Ø 20x2,25 |
| **679**266 | 3/4” | - Ø 20x2,5 |

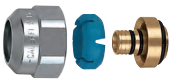

### 6815 DARCAL

Self-adjustable diameter fitting **for single and multilayer plastic pipes**.

| Code | | $Ø_{inside}$ | $Ø_{outside}$ |
|---|---|---|---|
| **681**502 | 3/4” | 7,5– 8 | 12–14 |
| **681**500 | 3/4” | 9 – 9,5 | 14–16 |
| **681**501 | 3/4” | 9,5–10 | 12–14 |
| **681**506 | 3/4” | 9,5–10 | 14–16 |
| **681**515 | 3/4” | 10,5–11 | 14–16 |
| **681**517 | 3/4” | 10,5–11 | 16–18 |
| **681**524 | 3/4” | 11,5–12 | 14–16 |
| **681**526 | 3/4” | 11,5–12 | 16–18 |
| **681**535 | 3/4” | 12,5–13 | 16–18 |
| **681**537 | 3/4” | 12,5–13 | 18–20 |
| **681**546 | 3/4” | 13,5–14 | 18–20 |
| **681**555 | 3/4” | 14,5–15 | 18–20 |
| **681**556 | 3/4” | 15 –15,5 | 18–20 |
| **681**564 | 3/4” | 15,5–16 | 18–20 |



### 4375

Compression fitting, **for annealed copper**, **hard copper**, **brass**, **mild and stainless steel**. With O-Ring seal.

| Code | |
|---|---|
| **437**510 | 3/4” - Ø 10 |
| **437**512 | 3/4” - Ø 12 |
| **437**514 | 3/4” - Ø 14 |
| **437**515 | 3/4” - Ø 15 |
| **437**516 | 3/4” - Ø 16 |
| **437**518 | 3/4” - Ø 18 |



### 4385

Compression fitting, **for copper pipes**. With PTFE seal.

| Code | |
|---|---|
| **438**512 | 3/4” - Ø 12 |
| **438**514 | 3/4” - Ø 14 |
| **438**515 | 3/4” - Ø 15 |
| **438**516 | 3/4” - Ø 16 |
| **438**518 | 3/4” - Ø 18 |

## 3/4” M - Ø 18

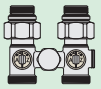



***Series:*** ***3010***
***3011***
***3012***
***3013***
***3014***
***3015***

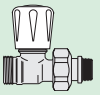

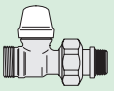

***Codes:*** ***338***452
***339***452
***340***452
***342***452
***343***452

# BRASS FITTINGS

## 23 p.1,5 pipes connection



### 6791 DARCAL

Fitting **for multilayer plastic pipes** with continuous high temperature use.

**For a correct use, adjust the multilayer pipe diameter before installation using the Caleffi calibrator 679 series.**

| Code | | |
|---|---|---|
| **679**114 | 23 p.1,5 | - Ø 14x2 |
| **679**124 | 23 p.1,5 | - Ø 16x2 |
| **679**125 | 23 p.1,5 | - Ø 16x2,25 |
| **679**144 | 23 p.1,5 | - Ø 18x2 |



### 4460

Pre-assembled compression fitting, **for annealed copper**, **hard copper**, **brass**, **mild and stainless steel pipes**. With O-Ring seal.

| Code | | |
|---|---|---|
| **446**010 | 23 p.1,5 | - Ø 10 |
| **446**012 | 23 p.1,5 | - Ø 12 |
| **446**014 | 23 p.1,5 | - Ø 14 |
| **446**015 | 23 p.1,5 | - Ø 15 |
| **446**016 | 23 p.1,5 | - Ø 16 |



### 6800 DARCAL

Self-adjustable diameter fitting **for single and multilayer plastic pipes**.

| Code | | $Ø_{inside}$ | $Ø_{outside}$ |
|---|---|---|---|
| **680**000 | 23 p.1,5 | 7,5– 8 | 12–14 |
| **680**002 | 23 p.1,5 | 9 – 9,5 | 14–16 |
| **680**001 | 23 p.1,5 | 9,5–10 | 12–14 |
| **680**006 | 23 p.1,5 | 9,5–10 | 14–16 |
| **680**015 | 23 p.1,5 | 10,5–11 | 14–16 |
| **680**017 | 23 p.1,5 | 10,5–11 | 16–18 |
| **680**024 | 23 p.1,5 | 11,5–12 | 14–16 |
| **680**026 | 23 p.1,5 | 11,5–12 | 16–18 |
| **680**035 | 23 p.1,5 | 12,5–13 | 16–18 |
| **680**044 | 23 p.1,5 | 13,5–14 | 16–18 |



### 3470

Compression fitting, **for annealed copper**, **hard copper**, **brass**, **mild and stainless steel pipes**. With O-Ring seal.

| Code | | |
|---|---|---|
| **347**010 | 23 p.1,5 | - Ø 10 |
| **347**012 | 23 p.1,5 | - Ø 12 |
| **347**014 | 23 p.1,5 | - Ø 14 |
| **347**015 | 23 p.1,5 | - Ø 15 |
| **347**016 | 23 p.1,5 | - Ø 16 |

### 6800 DARCAL

Self-adjustable diameter fitting **for single and multilayer plastic pipes**.



| Code | | $Ø_{inside}$ | $Ø_{outside}$ |
|---|---|---|---|
| **680**055 | 23 p.1,5 | 14,5–15 | 18–20 |
| **680**064 | 23 p.1,5 | 15,5–16 | 18–20 |

## 23 p.1,5 M - Ø 18



***Series:*** ***350*** ***351*** ***349***

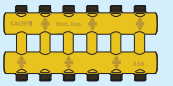

***Series:*** ***356*** ***357*** ***385*** ***161***



***Series:*** ***354***

# BRASS FITTINGS

## 3/4" pipes connection

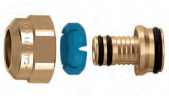

### 6795 DARCAL

Fitting **for multilayer plastic pipes** with continuous high temperature use.

**For a correct use, adjust the multilayer pipe diameter before installation using the Caleffi calibrator 679 series.**

| Code | | |
|---|---|---|
| **679**514 | 3/4" | Ø 14 x 2 |
| **679**524 | 3/4" | Ø 16 x 2 |
| **679**525 | 3/4" | Ø 16 x 2,25 |
| **679**544 | 3/4" | Ø 18 x 2 |
| **679**564 | 3/4" | Ø 20 x 2 |
| **679**565 | 3/4" | Ø 20 x 2,25 |
| **679**566 | 3/4" | Ø 20 x 2,5 |

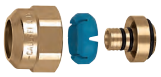

### 6805 DARCAL

Self-adjustable diameter fitting **for single and multilayer plastic pipes.**

| Code | | $Ø_{inside}$ | $Ø_{outside}$ |
|---|---|---|---|
| **680**507 | 3/4" | 7,5– 8 | 10,5–12 |
| **680**502 | 3/4" | 7,5– 8 | 12 –14 |
| **680**503 | 3/4" | 8,5– 9 | 12 –14 |
| **680**500 | 3/4" | 9 – 9,5 | 14 –16 |
| **680**501 | 3/4" | 9,5–10 | 12 –14 |
| **680**506 | 3/4" | 9,5–10 | 14 –16 |
| **680**515 | 3/4" | 10,5–11 | 14 –16 |
| **680**517 | 3/4" | 10,5–11 | 16 –18 |
| **680**524 | 3/4" | 11,5–12 | 14 –16 |
| **680**526 | 3/4" | 11,5–12 | 16 –18 |
| **680**535 | 3/4" | 12,5–13 | 16 –18 |
| **680**537 | 3/4" | 12,5–13 | 18 –20 |
| **680**544 | 3/4" | 13,5–14 | 16 –18 |
| **680**546 | 3/4" | 13,5–14 | 18 –20 |
| **680**555 | 3/4" | 14,5–15 | 18 –20 |
| **680**556 | 3/4" | 15 –15,5 | 18 –20 |
| **680**564 | 3/4" | 15,5–16 | 18 –20 |
| **680**505 | 3/4" | 17 | 22,5 |

### 6802 DARCAL

Compression ends fitting **for multilayer pipes with fitting M-F.**



| Code | | |
|---|---|---|
| **680**285 | 3/4" F | - Ø 25x2,5 |
| **680**296 | 3/4" F | - Ø 26x3 |



### 3475

Compression fitting, **for annealed copper, hard copper, brass, mild and stainless steel pipes.** With O-Ring seal.

| Code | | |
|---|---|---|
| **347**510 | 3/4" | - Ø 10 |
| **347**512 | 3/4" | - Ø 12 |
| **347**514 | 3/4" | - Ø 14 |
| **347**515 | 3/4" | - Ø 15 |
| **347**516 | 3/4" | - Ø 16 |
| **347**518 | 3/4" | - Ø 18 |



### 3475..S1

Compression fitting **for annealed copper, hard copper, brass, mild steel and stainless steel pipes.** With O-Ring seal. **Specific to be used with manifolds 668...S1 series.**

| Code | | |
|---|---|---|
| **347**512S1 | 3/4" | - Ø 12 |
| **347**514S1 | 3/4" | - Ø 14 |

## 3/4" M - Ø 18



***Series: 592***

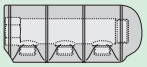

***Series: 650***

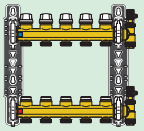

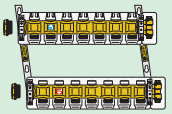

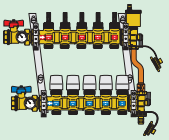

***Series: 662***
***6620***
***6621***
***663***
***6630***
***6631***
***666...S1****
***667...S1****
***668...S1****
***664***
***665***
***669***
***657***

**** Do not use with copper pipe fittings 347 and 5812 series***

## 1" pipes connection



### 6806 DARCAL

Self-adjustable diameter fitting **for single and multilayer plastic pipes.**

| Code | | $Ø_{inside}$ | $Ø_{outside}$ |
|---|---|---|---|
| **680**687 | 1" | 17,5 | 25 |
| **680**605 | 1" | 19,5 | 25 |

## 1" M - Ø 25



***Series: 941***
***942***

We reserve the right to modify our products, make technical improvements and develop them further.
None of the illustrations, numerical data, etc., are binding.

The products in this price list have been designed, manufactured and marketed in accordance with the Standard EN ISO 9001 Quality Management System.
Products marked with the “green dot •” are produced by companies in the Caleffi group.
Products marked with the “blue dot •” are commercialised.

© Copyright 2025 Caleffi

**CALEFFI S.p.A.**
S.R.229, N.25 · 28010 Fontaneto d'Agogna (NO) · Italia
Tel. +39 0322 8491
info@caleffi.com | www.caleffi.com

0505625