AutoFeed™ System Feeder

NA553700

Submittal Data 02193-26NA — Issue Date 11/2026

Application

The AutoFeed™ System Feeder maintains hydronic system pressure at the desired set value. The feeder automatically fills the system upon detecting a pressure drop in closed hydronic systems. Use the feeder to pressurize the system when the system is at the lowest temperature.

This pre-adjustable unit allows pressure adjustments before the system charging phase. These items operate strictly in closed hydronic systems. Do not use these items in plumbing applications. This unit does not meet low-lead plumbing standards of the United States or Canada.

Components included: digital pressure controller, drain valve, storage tank (4.5 gal), wall bracket, and a diaphragm pump.

Typical Specification

Furnish and install where indicated on the plans, an AutoFeed™ System Feeder assembly as provided by Caleffi. The system feeder shall automatically maintain static pressure in closed hydronic heating and cooling systems by monitoring system pressure and replenishing fluid upon detecting a pressure drop. Feeder assembly shall consist of a 4.5-gallon (17 L) polyethylene reservoir tank, a self-priming diaphragm pump, an integrated digital pressure controller with dynamic LED display, a plastic mesh strainer, a forged brass drain/purge valve, and a steel wall-mounting bracket.

System feeder shall operate with water or inhibited glycol solutions up to a maximum concentration of 50%. The feeder shall feature an adjustable cut-in and cut-out range from 0 to 45 psi (0 to 3.1 bar) with a factory setpoint of 16 psi cut-in and 18 psi cut-out, and shall provide a maximum pump discharge pressure of 45 psi (3.1 bar). External electrical supply shall be 115 VAC, 60 Hz, 1-phase with an internal 26 VDC power supply. System connection shall be 1/2" FNPT. System feeder shall strictly operate on non-potable closed hydronic systems and is not suitable for domestic plumbing or potable water service. (Refer to manufacturer's installation and operation instructions for specific mounting and wiring requirements.)

Technical characteristics

Materials

Tank:	polyethylene
Pump:	diaphragm
Wall Bracket:	steel
Strainer:	plastic mesh
Drain valve:	brass

Performance

Suitable fluids:	Water, glycol solutions
Max. percentage of glycol:	50%
Factory setting:	16 psi (cut-in), 18 psi (cut-out)
Pressure setting range:	0 - 45 psi
Max. pump pressure:	45 psi
Input Voltage:	115 VAC
Internal operating Voltage:	26 VDC
Connections:	1/2" FNPT

Dimensions

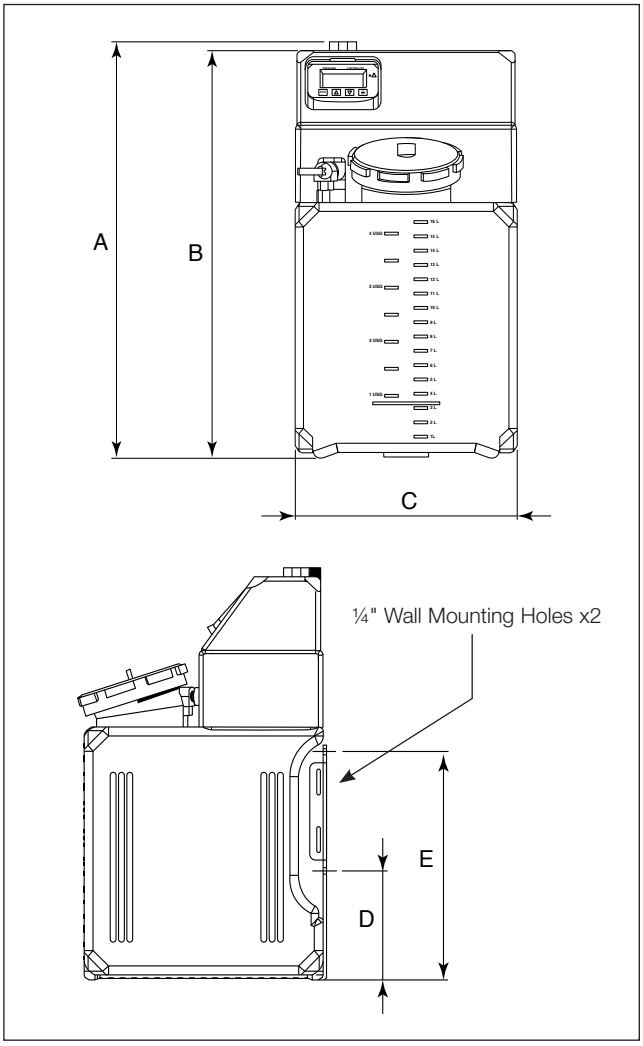

Code	A	B	C	D	E	Wt. lb (kg)
NA553700	18.3"	17.6"	9.84"	4.88"	10.2"	10 (4.5)

We reserve the right to change our products and their relevant technical data, contained in this publication, at any time and without prior notice. Contractors should request production drawings if prefabricating the system

Job name _____ Size _____
Job location _____ Quantity _____
Engineer _____ Approval _____
Mechanical contractor _____ Service _____
Contractor's P.O. No. _____ Tag No. _____
Representative _____ Notes _____

Caleffi North America, Inc. 3883 W. Milwaukee Road / Milwaukee, WI 53208
Tel: 414-238-2360 / Fax: 414-238-2366 / www.caleffi.com
© Copyright 2026 Caleffi North America, Inc.