AutoFeed™ System Feeder

NA553700

01440/26 NA



Function

The AutoFeed™ System Feeder maintains hydronic system pressure at the desired set value. The feeder automatically fills the system upon detecting a pressure drop in closed hydronic systems. Use the feeder to pressurize the system when the system is at the lowest temperature.

This pre-adjustable unit allows pressure adjustments before the system charging phase. These items operate strictly in closed hydronic systems. Do not use these items in plumbing applications. This unit does not meet low-lead plumbing standards of the United States or Canada.

Components included: digital pressure controller, drain valve, storage tank (4.5 gal), wall bracket, and a diaphragm pump.

Product range

NA553700	AutoFeed System Feeder

Technical characteristics

Materials

Tank:	polyethylene
Pump:	diaphragm
Wall Bracket:	steel
Strainer:	plastic mesh
Drain valve:	brass

Performance

Suitable fluids:	Water, glycol solutions
Max. percentage of glycol:	50%
Factory setting:	16 psi (cut-in), 18 psi (cut-out)
Pressure setting range:	0 - 45 psi
Max. pump pressure:	45 psi
Input Voltage:	115 VAC
Internal operating Voltage:	26 VDC
Connections:	1/2" FNPT

Dimensions

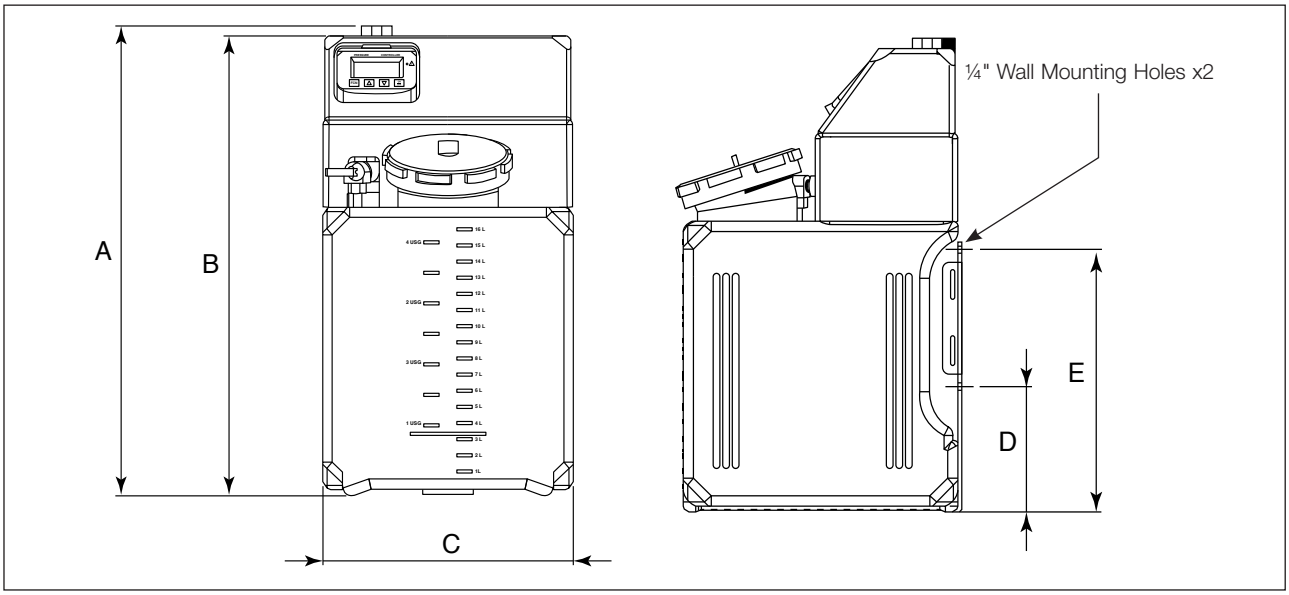

Code	A	B	C	D	E	Wt. lb (kg)
NA553700	18.3"	17.6"	9.84"	4.88"	10.2"	10 (4.5)

Application

The AutoFeed is designed for closed-loop hydronic systems that operate independently of municipal water mains. It is ideally suited for a wide range of residential and light commercial hydronic applications, including in-floor radiant heating networks, hydronic baseboards, snow melt systems, residential geothermal loops, and solar water heating installations.

Construction details

Furnish and install as shown on the plans and described herein, a Caleffi AutoFeed™ automatic glycol make-up unit. The system features a robust, translucent 4.5-gallon polyethylene storage tank with molded fluid-level markings, engineered for compatibility with water or up to a 50% glycol solution. To preserve system fluid integrity, an integrated Caleffi check valve prevents backflow into the reservoir. Designed specifically for closed-loop hydronic heating and cooling systems, the AutoFeed™ eliminates the need for reduced pressure zone backflow preventers and annual backflow assembly testing.

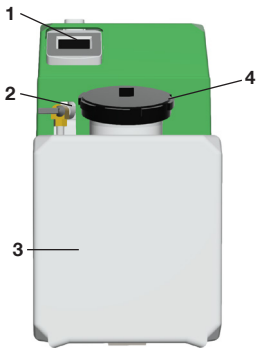

1	Controller
2	Drain valve
3	Tank
4	Tank access cover

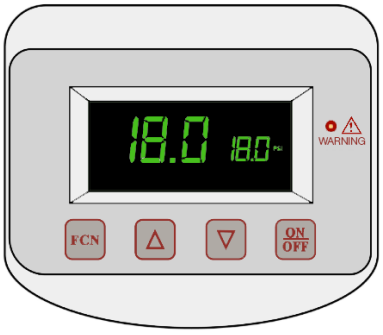

Controller

System stabilization is managed by a digital pressure controller. The controller is factory-set to a startup threshold of 16 psi and a shutoff threshold of 18 psi. The operating range guarantees maximum precision and immediate response to subtle system pressure drops while preventing rapid pump cycling.

Low fluid level protection and alarm features

To safeguard internal components, an integral low-fluid float switch automatically removes power to the pump when fluid level drops too low. Simultaneously, the digital controller triggers a local visual alarm notification. Relay contacts are included to allow an optional remote auxiliary alarm or building management system integration.

Maintenance

The digital pressure controller allows for customized operation, as both the pump cut-in and cut-out pressure settings can be fully adjusted to meet specific system requirements. To ensure reliable performance and prevent dry-running, the unit requires periodic fluid level checks of the storage tank.

Versatile integration

The AutoFeed supports flexible installation with options for both floor-standing and wall-mounted configurations in modern mechanical rooms. A translucent tank body with molded fluid-level markings simplifies routine maintenance and visual monitoring. Designed specifically for closed-loop hydronic systems, it eliminates the need for backflow preventers and annual backflow testing.

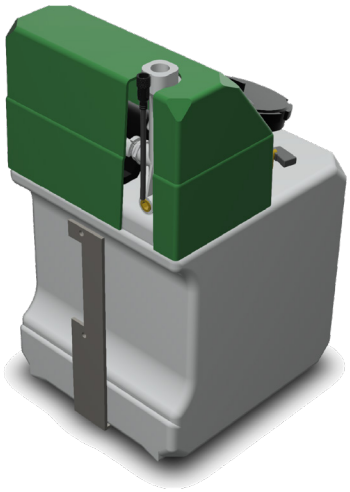



Diaphragm Motor & Pump Assembly

System fluid delivery is powered by a heavy-duty diaphragm pump delivering an open flow rate of 1.0 GPM at a maximum operating pressure of 45 psi. The pump mechanism is engineered to run dry without risking thermal overload or internal component failure, ensuring long-term reliability even during extended low-fluid conditions.

Application diagram

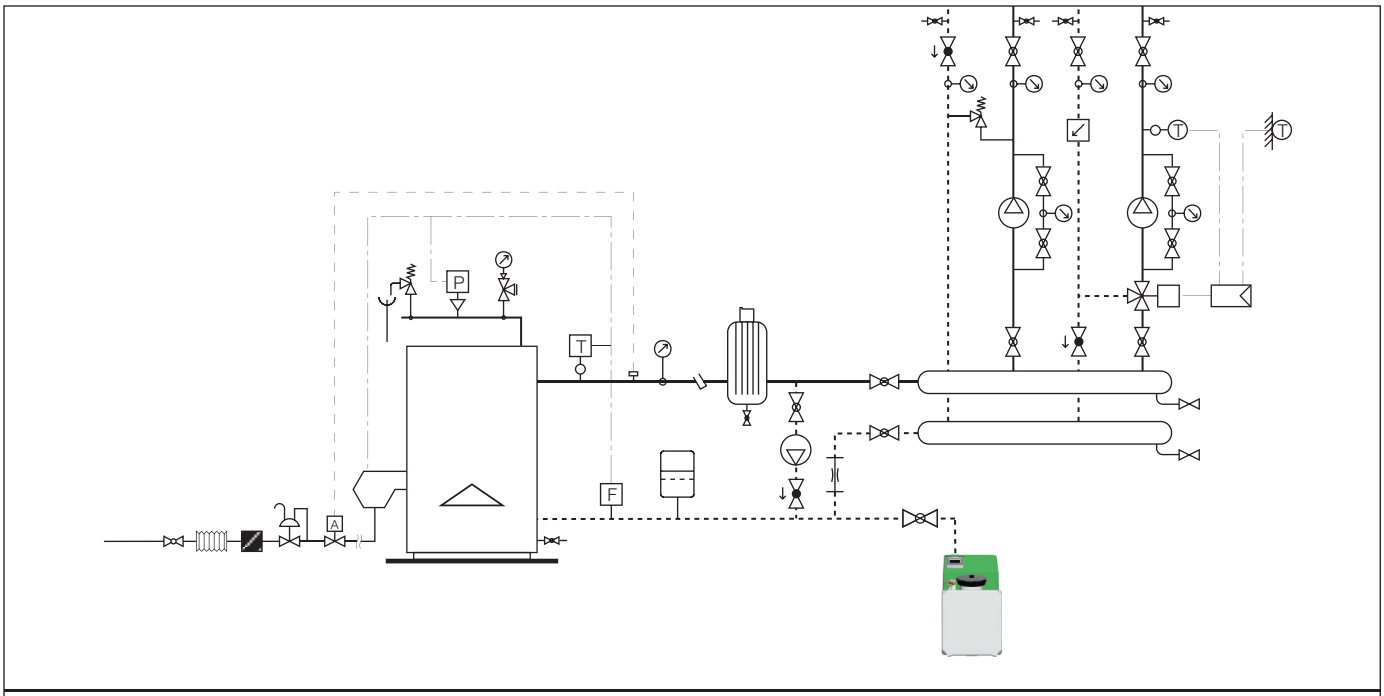

SPECIFICATION SUMMARY

AutoFeed™ system feeder

Automatic fluid feeder designed for hydronic water and glycol systems. Unit shall feature a polyethylene storage tank, steel wall mounting bracket, plastic mesh strainer, brass drain valve, and 1/2" FNPT system connections. Integrated diaphragm pump shall be compatible with water and glycol mixtures up to 50% concentration, providing a maximum pump operating pressure of 45 psi across an adjustable range of 0 to 45 psi (factory pre-set at 16 psi cut-in and 18 psi cut-out). Electrical requirements include 115 VAC primary input power with 26 VDC internal operating voltage.

We reserve the right to make changes and improvements to our products and the related technical data in this publication, at any time and without prior notice.
The website www.caleffi.com always has the most up-to-date version of the document, which should be used for technical verifications.

© Copyright 2026 Caleffi