PresCal™ Compact (dual union) pressure reducing valves

5332 series

CALEFFI

01436/26 NA

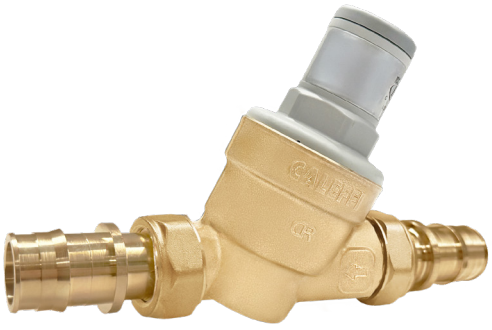

Function

Pressure reducing valves reduce and stabilize incoming water main pressure in domestic systems where supply pressure exceeds operating requirements or local plumbing code limits. The PresCal™ Compact 5332 series features a DZR low-lead forged brass body with a high-flow, noise-reducing seat design. A Posi-Stop™ union embedded O-ring uses a metal-to-metal stop to prevent over-tightening, providing positive feedback and consistent, leak-free performance. It is easily serviced via a replaceable internal cartridge and includes an integral stainless steel mesh filter to capture system sediment and debris. An included tamper-resistant cap replaces the standard cap to conceal the adjustment screw and prevent unauthorized adjustments.

Certifications

ICC ES c PMG LOW LEAD

ASSE 1003/CSA B356

NSF/ANSI/CAN 61

NSF/ANSI/CAN 372

Product range

5332 Series PresCal Compact pressure reducing valve..... sizes ¾" and 1"

Technical specification

Materials

Body:	DZR low lead* brass (EN 12165 CW724R)
Control stem:	
• DN 20:	stainless steel (AISI 303)
• DN 25:	DZR low lead* brass (EN 12165 CW724R)
Obturator:	DZR low lead* brass (EN 12165 CW724R)
Cartridge housing:	reinforced nylon (PPSG40)
Diaphragm & seals:	peroxide-cured EPDM
Strainer:	stainless steel (AISI 304)

*Meets the "lead free" requirements of Section 1417 of the Safe Drinking Water Act (SDWA). This product has a weighted average lead content of less than 0.25% for its wetted surface area in contact with consumable water.

Performance

Max. working pressure:	250 psi (1700 kPa)
Max. water temperature:	180 °F (80 °C)
Adj. pressure setting range:	15 - 80 psi (100 - 550 kPa)
Factory pressure setting:	65 psi (450 kPa)
Strainer size:	
• DN 20:	25 mesh (0.79 mm)
• DN 25:	35 mesh (0.51 mm)
Suitable fluids:	water

Certifications

- ASSE 1003 / CSA B356, UPC, IPC, IRC, and NPC compliance for use in accordance with U.S. and Canadian plumbing codes. Listed and certified by ICC-ES, PMG File 1356.
- NSF/ANSI/CAN 61 (180°F/82°C Commercial Hot), Drinking Water System Components for use in potable water systems. Certified by ICC-ES, PMG File 1512.
- NSF/ANSI/CAN 372, US and Canadian Low-Lead and Lead-Free materials contents laws for drinking water system components. Certified by ICC-ES, PMG File 1360.

Connection range

• Inlet/outlet:	Posi-Stop dual union
• Sizes:	¾" and 1"
• Fitting types:	NPT female, sweat, press, PEX crimp, or PEX expansion

Dimensions

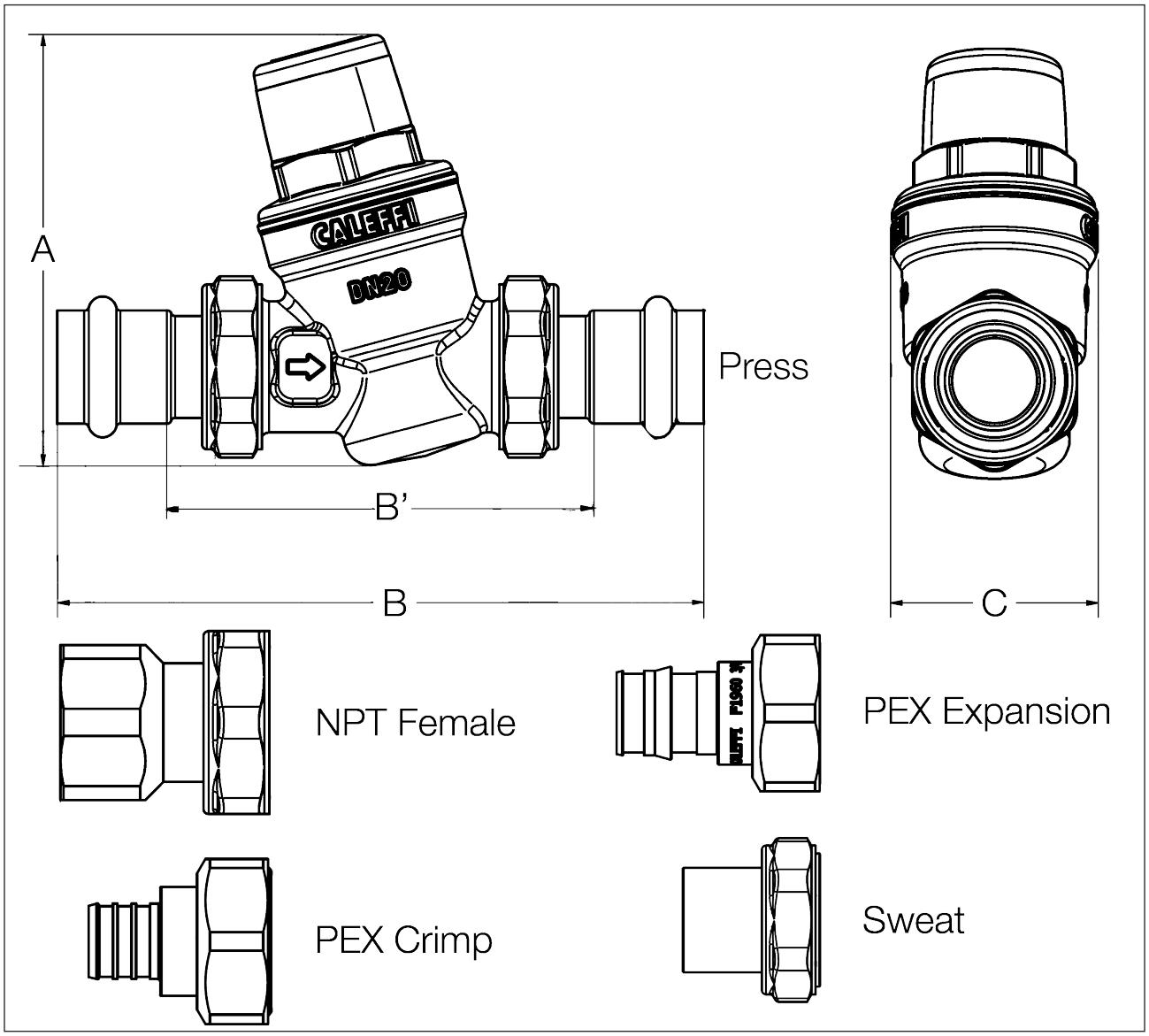

Model	Connection		Dimensions				Weight (lbs)	
	Size	Connection	A	B	B'	C	Net	Gross
533253HA	3/4"	NPT Female	3 3/4"	5 1/2"		1 13/16"	1.31	1.38
533256HA	3/4"	Press	3 3/4"	5 5/16"	3 13/16"	1 13/16"	1.18	1.25
533257HA	3/4"	PEX Crimp	3 3/4"	5 5/16"		1 13/16"	1.17	1.24
533258HA	3/4"	PEX Expansion	3 3/4"	6"		1 13/16"	1.23	1.30
533259HA	3/4"	Sweat	3 3/4"	4 13/16"	3 5/16"	1 13/16"	1.16	1.23
NA533250HA	DN 20	Body only	3 3/4"	2 7/8"		1 13/16"	0.76	0.83
533263HA	1"	NPT Female	4 3/8"	6 7/16"		2 3/16"	1.73	1.86
533266HA	1"	Press	4 3/8"	6 3/16"	4 5/8"	2 3/16"	1.44	1.57
533267HA	1"	PEX Crimp	4 3/8"	6 5/16"		2 3/16"	1.39	1.52
533268HA	1"	PEX Expansion	4 3/8"	7 3/16"		2 3/16"	1.51	1.64
533269HA	1"	Sweat	4 3/8"	6 1/2"	4 11/16"	2 3/16"	1.55	1.68
NA533260HA	DN 25	Body only	4 3/8"	3 5/16"		2 3/16"	0.95	1.08

Operating principle

Operation of the pressure reducing valve is based on the balance between two opposing forces:

1. The force of the spring towards the opening of the valve.
2. The force of the diaphragm towards the closure of the valve.

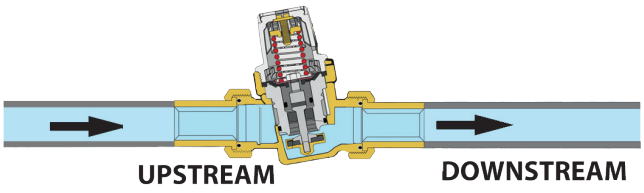

Operation with water flow

When a faucet is opened in the water system, the force of the spring becomes greater than that of the diaphragm; the shuttle moves downwards opening the valve to the flow of water. The greater the demand for water the lower the pressure under the diaphragm with a resulting greater flow of water through the valve.

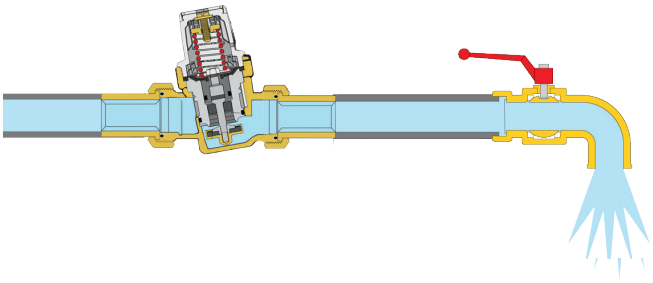

Operation without water flow

When the faucet is closed, the downstream pressure rises and pushes the diaphragm upwards. As a result the shuttle closes the valve to the flow of water and maintains the pressure at the pressure setting. The slight difference between the force of the diaphragm compared to that of the spring causes the valve to remain closed.

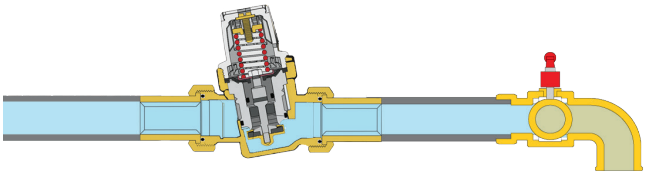

Construction details

Contoured diaphragm

The diaphragm is designed with a special shape to assure more accurate pressure regulation in accordance with downstream pressure fluctuations.

This feature also extends the life of the valve, since the diaphragm is more resistant to sudden pressure fluctuations and to normal wear.

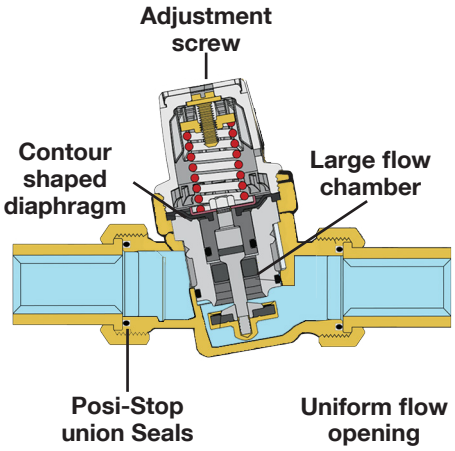

Non-stick materials

The central support assembly (1), containing moving parts, is made of plastic material with a low adherence coefficient. This minimizes the formation of lime scale, a common cause of flow inconsistencies.

Stainless steel stem

The stainless steel stem (2) minimizes the harmful effects associated with the use of hard and aggressive water.

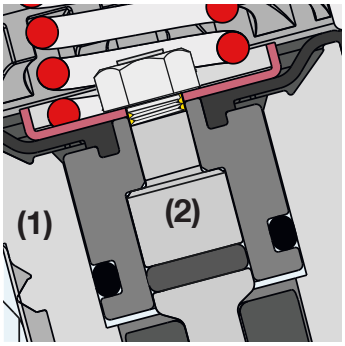

Removable cartridge

The cartridge containing the diaphragm, filter, seat and valve plug, shuttle and compensating piston is a pre-assembled self-contained unit with a cover, and can be removed to facilitate inspection and maintenance procedures.

The special construction of the regulating element does not require any modification of the pressure setting, which may be left unchanged.

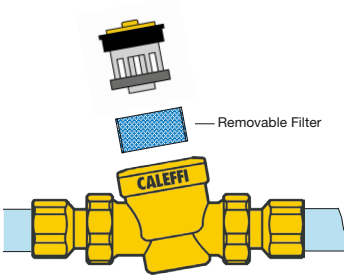

Compact dimensions

The “inclined” configuration makes the PresCal Compact 5332 series pressure reducing valves compact for easy installation.

Maximum velocity for sizing

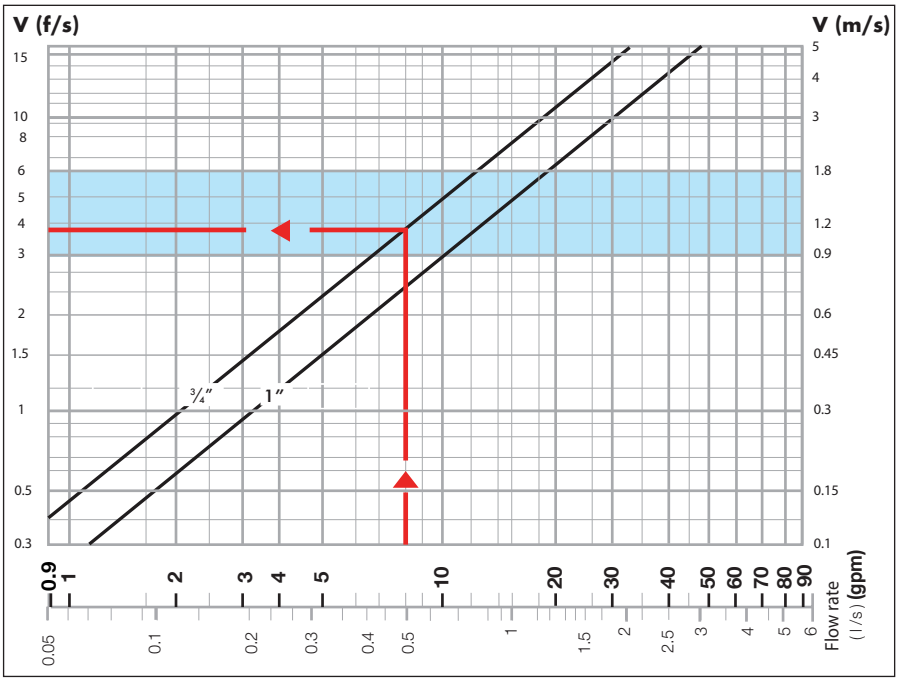

Flow capacity

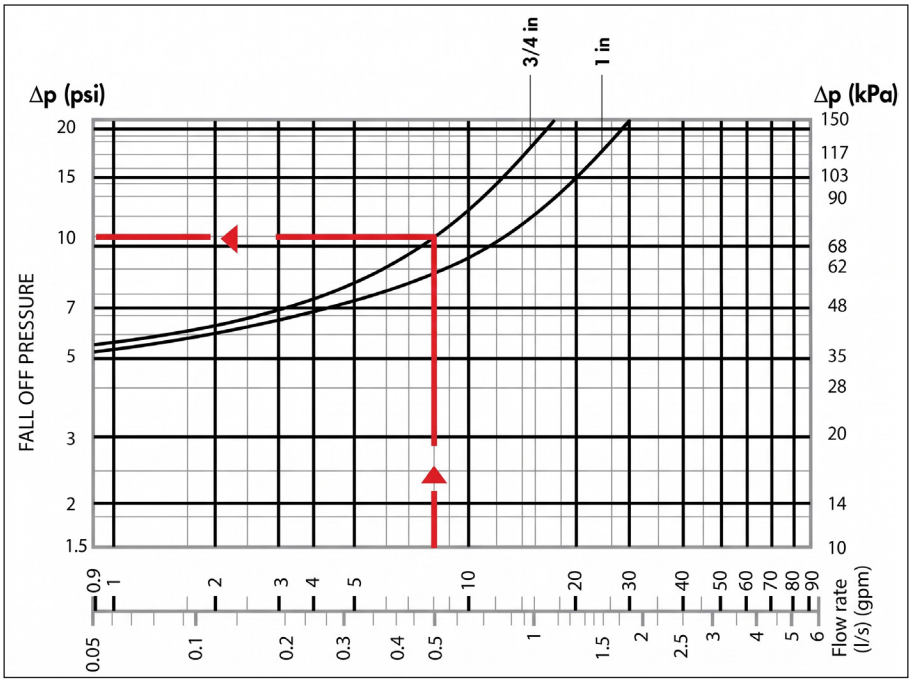

Sizing procedure

Flow velocity is recommended to be kept within 3 to 6 feet per second when calculating the correct pressure reducing valve size. This will prevent noise in the pipes and rapid wear of fixtures. The valve will accurately control pressure down to a velocity of 1 fps.

The correct size of the pressure reducing valve is taken from graph 1 on the basis of the design flow rate taking into account an ideal flow velocity in the valve body of between 3 and 6 f/s (blue band).

Example:

For 8 gpm, select the 3/4" size valve (see arrow on flow capacity graph).

The pressure drop is taken from the above flow capacity graph also on the basis of where the design flow rate intersects the curve for the valve size already selected (the downstream pressure falls by an amount equal to the pressure drop, with respect to the set pressure at no flow condition).

Example:

For 8 gpm the Δp = 10 psi.

	Design Flow Rate	
Size	DN 20	DN 25
gpm	5.6 to 10	8 to 16
l/s	0.35 to 0.63	0.5 to 1

Setting

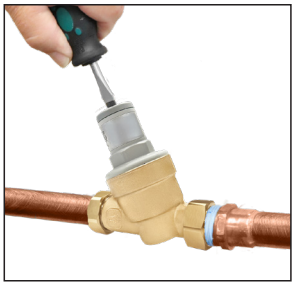

Using a flathead screwdriver turn the screw on top of the plastic cover. Turn it clockwise to increase the pressure and counter-clockwise to decrease it.

PresCal Compact 5332 series pressure reducing valves are factory set to 65 psi (3 bar).

Installation recommendations

To minimize risk of cavitation, which can cause erosion in the valve seal, and vibration and noise, refer to the operating conditions noted in the above Cavitation diagram. The ideal upstream pressure to downstream pressure ratio is 2:1, and no more than 3:1. For example, upstream pressure 80 psi, downstream pressure 40 psi, pressure ratio is 80/40, 2:1. Under this condition the risk of cavitation is minimized. If the pressure ratio is in the High risk of cavitation range (see above chart), consider staging the pressure drop. For instance, break up a large system pressure drop, such as 200 psi to 50 psi (4:1 ratio) to 200 psi to 100 psi (2:1 ratio) for the first stage reduction, and 100 psi to 50 psi (2:1 ratio). Secure the upstream and downstream pipes with brackets per manufacturer instructions and local requirements to avoid generating and transmitting noise and vibration.

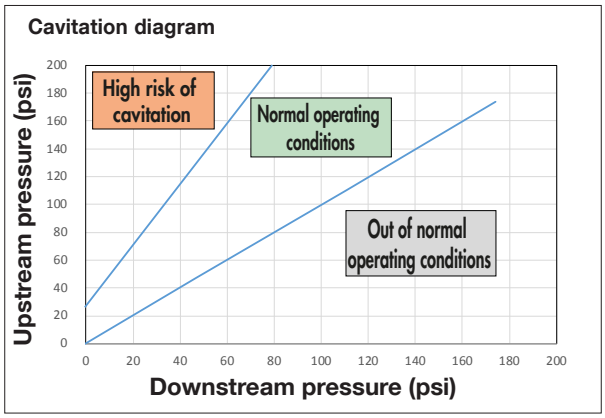

Installation recommendations

1. Installation below ground
   i. Installation below the ground is not advisable.
2. Outdoor installation
   i. Pressure reducing valves should not be installed outside the building unless properly protected from freezing and the weather.
3. Water hammer
   i. Water hammer is a common reason for pressure reducing valve failures. Specific devices should be installed to absorb water hammer for systems with this risk.

Tamper-resistant cap:

The PresCal Compact 5332 series comes with a standard gray snap-on cap which has a hole in the center to allow set point adjustment using a flathead screwdriver. Also included is a black “tamper-resistant” cap, which can replace the standard cap, to hide the adjustment screw thus preventing set point tampering.



Troubleshooting

System failures are not always caused by the pressure reducing valve. Most frequently:

1. Increased downstream pressure in the presence of a water heater
   i. If the downstream pressure increases beyond the desired setting due to an in-line water heater, install an expansion tank between the pressure reducing valve and the water heater to absorb the increased pressure, caused by water expansion from heating.

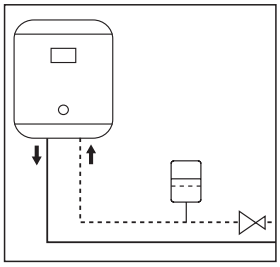

2. The pressure reducing valve does not maintain downstream setting value
   i. If the pressure reducing valve does not maintain the downstream setting, it most likely is due to impurities accumulating on the valve seat, causing unnecessary flow to pass through, increasing the downstream pressure. Proper maintenance and cleaning of the removable cartridge is recommended.

Application diagram

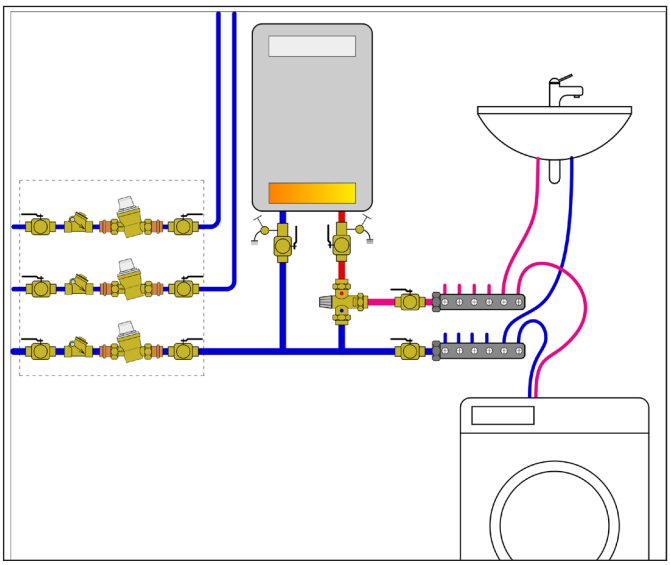

Replacement parts



Replacement cartridge

533000H.....For ¾" valves (DN20)
533013H.....For 1" valves (DN25)



Tamper Cap

F0000993.....For ¾" (DN20) and 1" (DN25) valves



Posi-Stop O-ring (10 Pack)

NA10998.....For ¾" (DN20) and 1" (DN25) valves

SPECIFICATION SUMMARY

Furnish and install on the plans and described herein, a Caleffi 5332 series pressure reducing valve as manufactured by Caleffi. Each valve must be designed with a self-contained removable cartridge with stainless steel filter. The valve design must include a DZR low-lead forged brass body, peroxide-cured EPDM diaphragm and seals. Equipped with an adjustable setting screw for manual pressure tuning, the valve comes factory preset to 65 psi. Provided with tamper-resistant cap for optional use. The valve must be ICC-ES certified and listed to ASSE 1003/CSA B356, NSF/ANSI/CAN 61 (180°F/82°C Commercial Hot), NSF/ANSI/CAN 372, low lead laws; and meet codes IPC, IRC, UPC and NPC for use in accordance with the US and Canadian plumbing codes. Each valve shall be Caleffi model 5332 series or approved equal. (See product instructions for specific installation information.)

We reserve the right to make changes and improvements to our products and the related technical data in this publication, at any time and without prior notice. The website www.caleffi.com always has the most up-to-date version of the document, which should be used for technical verifications.

Caleffi North America, Inc. 3883 W. Milwaukee Road · Milwaukee, WI 53208
Tel: 414-238-2360 · Fax: 414-238-2366 · www.caleffi.com
© Copyright 2026 Caleffi