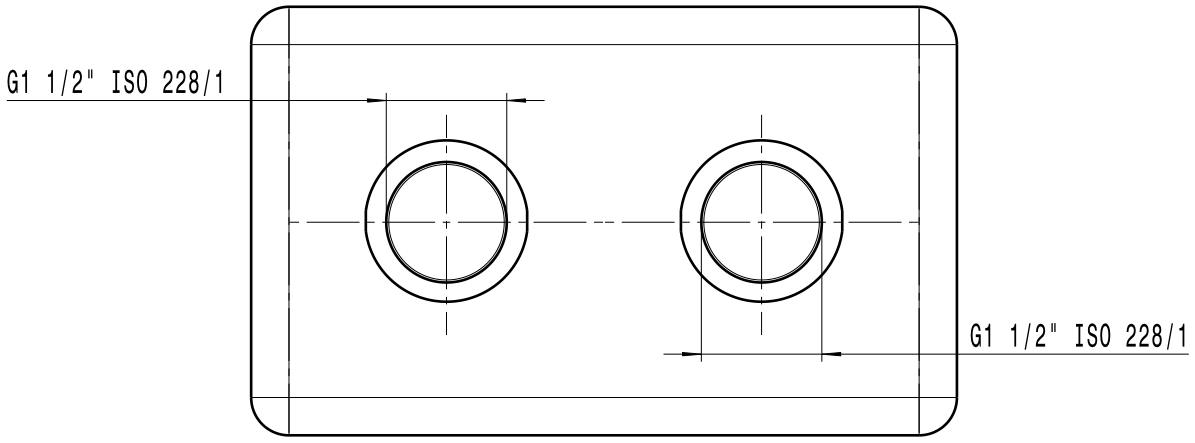

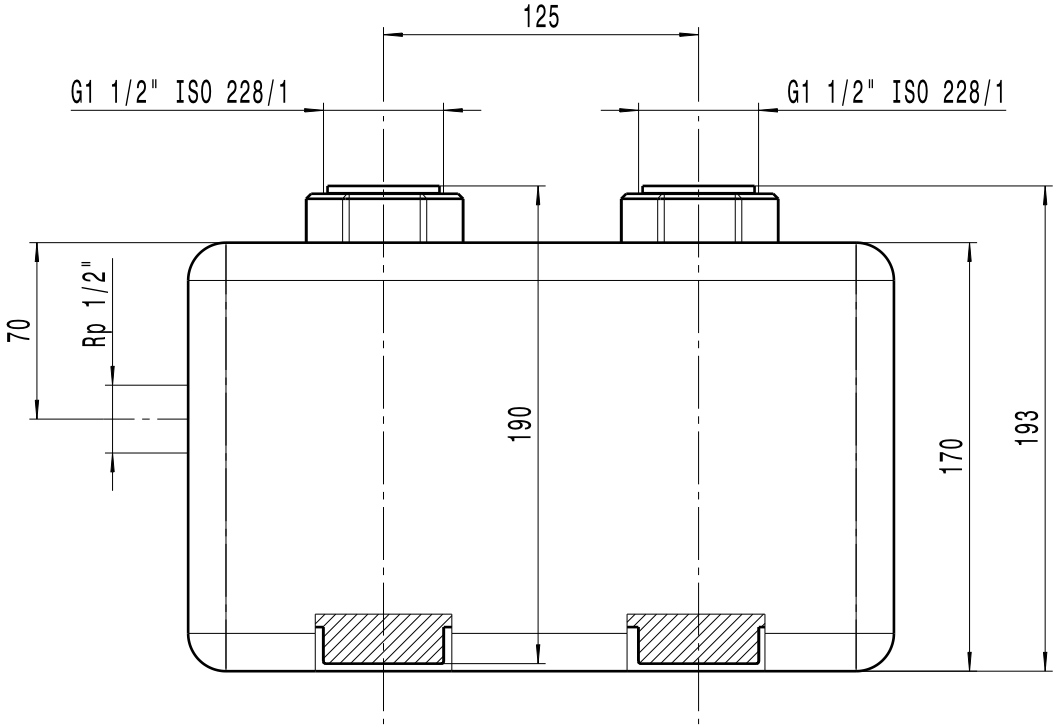

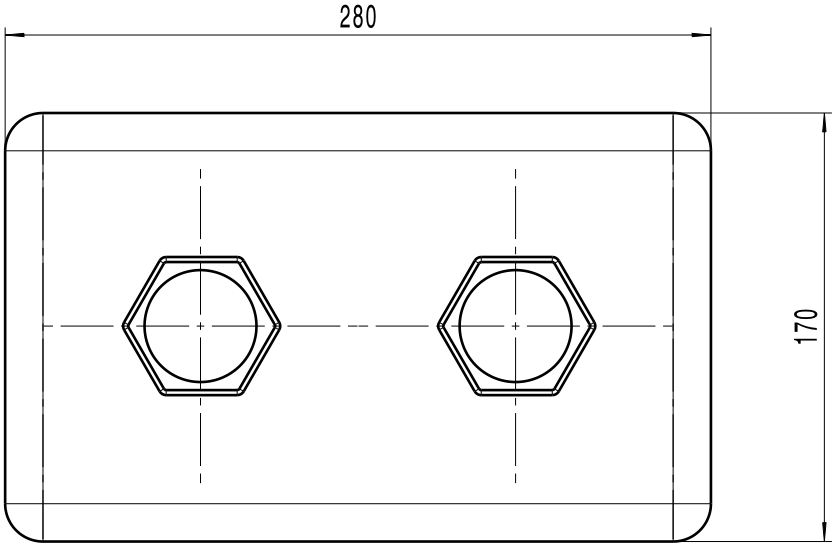

CALEFFI Hydronic Solutions

DESCRIPTION

SEPARATORE COIBENT. Ø11/2" INT.125 X 550

CODE

550205

A4